F.A.I. RTE.	SECTION	COUNTY	TOTAL SHEETS	SHEET NO.
70	•	CLARK		
STA.		TO STA.		
FED. ROAD DIST. NO.	ILLINOIS	FED. AID PROJECT		

• 12(53,54)R & (12-53)RA-2

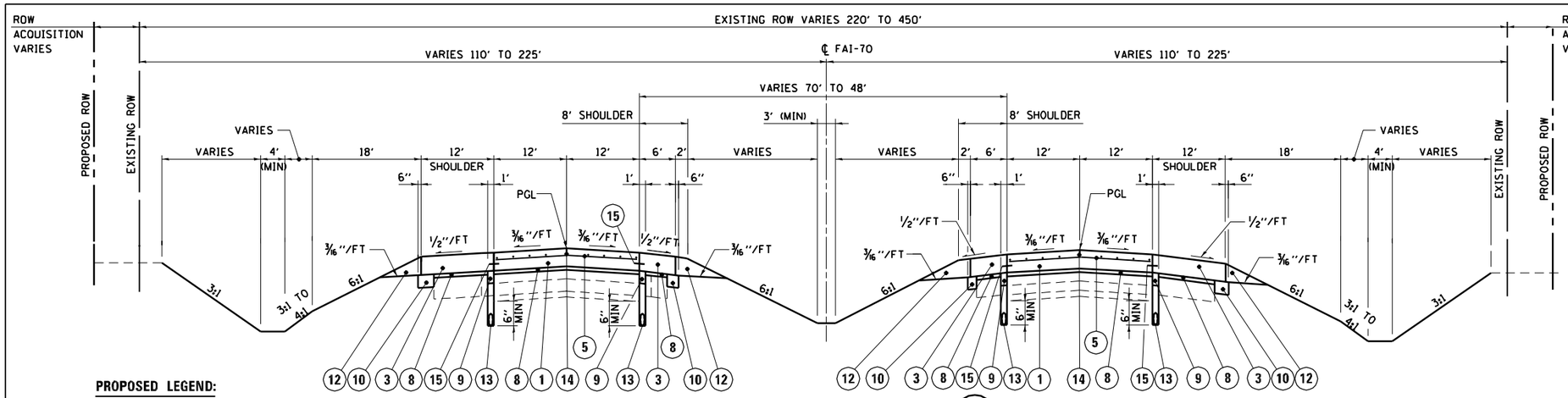

NOTES:

1. FOR RUMBLE STRIP DETAIL, SEE FAI-70 TYPICAL SECTION SHEET 7 OF 7.
2. SEE PAVEMENT STANDARDS 420001 AND 483001 FOR JOINTING DETAILS.
3. SEE ROADWAY DETAILS FOR LUG SYSTEM DETAILS AND PAVEMENT TRANSITION DETAILS.
4. FOR PAVING OMISSIONS, SEE BRIDGE PLANS AT THE FOLLOWING LOCATIONS:

DESCRIPTION	STATION	TO	STATION	SIDE
IL RTE 1 BRIDGE	1639+63.5		1641+98.0	LT
	1639+41.6		1641+76.1	RT
BIG CREEK BRIDGE	135+67.9		139+02.6	LT
	136+49.6		139+84.4	RT
EAST LITTLE CREEK BRIDGE	214+12.1		217+07.3	LT
	214+37.3		217+32.5	RT
CROOKED CREEK BRIDGE	368+12.9		370+32.9	LT
	368+47.1		370+67.1	RT
HAWKS CREEK BRIDGE	498+86.5		501+87.0	LT
	498+89.5		501+84.0	RT

5. THE OUTSIDE SHOULDER VARIES BETWEEN 12' AND 10' AT THE FOLLOWING LOCATIONS:

STATION	TO	STATION	SIDE
1601+34.80		1605+74.19	LT
1601+44.40		1605+76.96	RT
1637+98.11		1643+70.29	LT
1637+70.81		1643+43.28	RT
123+08.13		127+27.78	LT
122+43.72		126+68.89	RT
191+01.54		196+11.56	LT
192+11.14		196+43.17	RT
212+24.40		218+83.39	LT
212+60.25		219+20.33	RT
341+85.05		346+14.61	LT
341+85.01		346+14.64	RT
366+35.72		371+93.23	LT
366+86.16		372+46.63	RT
394+83.34		399+18.66	LT
394+88.64		399+13.32	RT
461+36.00		466+07.24	LT
460+31.43		465+09.27	RT
542+72.50		547+11.32	RT

6. FOR DITCH LINING, SEEDING, AND EROSION CONTROL DETAILS, SEE FAI-70 DRAINAGE DETAILS SHEETS.
7. REFER TO PLAN DETAILS, MAINLINE WEIGH-IN-MOTION SYSTEM SHEETS FOR TYPICAL SECTIONS AT THE FOLLOWING LOCATION: STA 352+45 TO STA 356+54 LT.
8. REFER TO SCHEDULE OF QUANTITIES FOR APPROXIMATE RANGE OF THICKNESS OF BITUMINOUS SURFACE REMOVAL, VARIABLE DEPTH.
9. STATION EQUATIONS OCCUR AT THE FOLLOWING LOCATIONS:

STA 1659+64.17 (BK) = STA 100+00.00 (AH)
STA 115+50.10 (BK) = STA 115+50.76 (AH)
STA 125+99.82 (BK) = STA 126+00.00 (AH)
STA 151+13.41 (BK) = STA 151+13.23 (AH)
STA 209+05.75 (BK) = STA 209+05.58 (AH)
STA 222+17.91 (BK) = STA 222+18.09 (AH)
STA 358+02.96 (BK) = STA 352+02.80 (AH)
STA 377+99.99 (BK) = STA 378+00.14 (AH)
STA 465+18.09 (BK) = STA 465+09.57 (AH)
STA 511+98.86 (BK) = STA 512+07.39 (AH)

PROPOSED LEGEND:

1. CONTINUOUSLY REINFORCED PORTLAND CEMENT CONCRETE PAVEMENT, 12"
2. CONTINUOUSLY REINFORCED PORTLAND CEMENT CONCRETE PAVEMENT, 13"
3. PORTLAND CEMENT CONCRETE SHOULDERS, 12"
4. PORTLAND CEMENT CONCRETE SHOULDERS, 13"
5. PAVEMENT REINFORCEMENT, 12"
6. PAVEMENT REINFORCEMENT, 13"
7. BITUMINOUS CONCRETE BINDER COURSE, SUPERPAVE, IL-19.0L (LOW ESAL) (672 LBS PER SQ YD)
8. BITUMINOUS CONCRETE BINDER COURSE, SUPERPAVE, IL-19.0L (LOW ESAL), VARIABLE DEPTH
9. SHOULDER REMOVAL AND REPLACEMENT, 5"
10. BITUMINOUS BASE COURSE WIDENING, SUPERPAVE, 8"
11. AGGREGATE SUBBASE, 12"
12. AGGREGATE SHOULDERS, TYPE B, VARIABLE DEPTH
13. PIPE UNDERDRAINS, 4"
14. SAWED LONGITUDINAL JOINT-30" LONG, #8 EPOXY COATED BARS AT 24" CENTERS
15. LONGITUDINAL CONSTRUCTION JOINT-30" LONG, #8 EPOXY COATED BARS AT 24" CENTERS
16. BITUMINOUS SURFACE REMOVAL, VARIABLE DEPTH (SEE NOTE 8)
17. LEVELING BINDER (MACHINE METHOD), SUPERPAVE, N50, VARIABLE DEPTH

REMOVAL ITEM

FAI-70 PROPOSED TYPICAL SECTION 4

STA 1611+50 TO STA 1614+45
STA 1617+69 TO STA 1621+37
STA 1629+80 TO STA 1633+70
STA 140+57 TO STA 164+70 LT
STA 141+38 TO STA 164+70 RT
STATION EQUATION:
STA 151+13.41 (BK) = STA 151+13.23 (AH)
STA 178+25 TO STA 180+51
STA 192+90 TO STA 194+60
STA 341+34 TO STA 345+94
STA 348+32 TO STA 352+45 LT
STA 356+73 TO STA 363+00 LT
STA 348+32 TO STA 363+00 RT
STA 396+28 TO STA 398+02
STA 459+69 TO STA 463+21

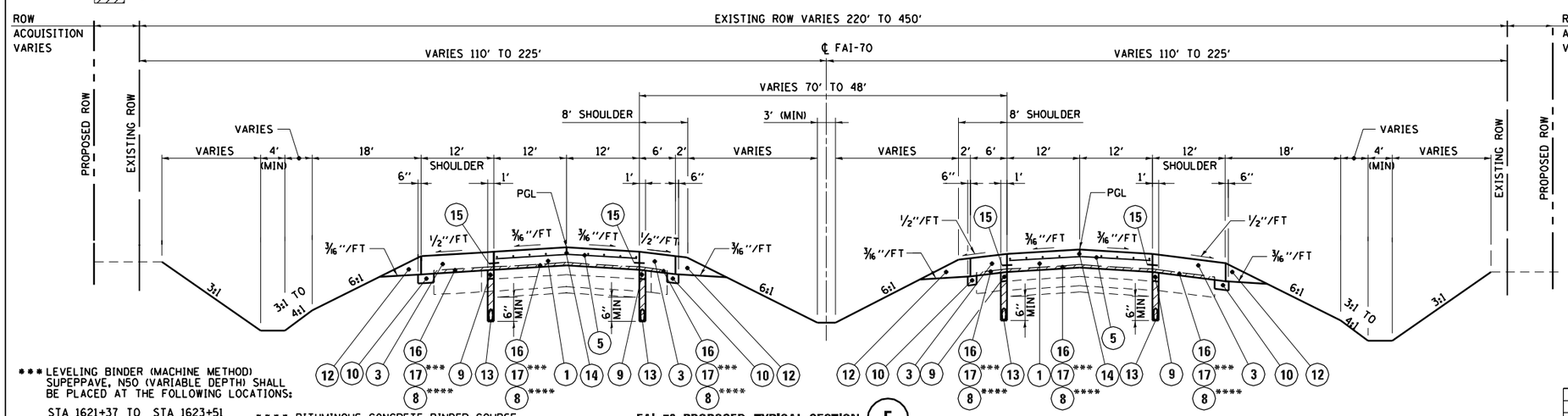

*** LEVELING BINDER (MACHINE METHOD) SUPEPPAVE, N50 (VARIABLE DEPTH) SHALL BE PLACED AT THE FOLLOWING LOCATIONS:

STA 1621+37 TO STA 1623+51
STA 1625+13 TO STA 1627+11
STA 1634+97 TO STA 1636+00
STA 172+59 TO STA 174+37
STA 331+87 TO STA 334+36
STA 335+44 TO STA 337+74
STA 339+36 TO STA 341+34
STA 420+62 TO STA 425+80

**** BITUMINOUS CONCRETE BINDER COURSE, SUPERPAVE, IL-19.0L, (LOWESAL) (VARIABLE DEPTH) SHALL BE PLACED AT THE FOLLOWING LOCATIONS:

STA 177+47 TO STA 178+25
STA 180+51 TO STA 181+69
STA 192+37 TO STA 192+90
STA 194+60 TO STA 196+00
STA 395+54 TO STA 396+28

FAI-70 PROPOSED TYPICAL SECTION 5

STA 1621+37 TO STA 1623+51
STA 1625+13 TO STA 1627+11
STA 1634+97 TO STA 1636+00
STA 172+59 TO STA 178+25
STA 180+51 TO STA 192+90

STA 194+60 TO STA 196+00
STA 218+61 TO STA 246+12 LT
STA 218+87 TO STA 246+12 RT
STATION EQUATION:
STA 222+17.91 (BK) = STA 222+18.09 (AH)

STA 273+11 TO STA 282+08
STA 307+97 TO STA 341+34
STA 382+00 TO STA 385+48
STA 395+54 TO STA 396+28
STA 409+40 TO STA 425+80
STA 513+87 TO STA 523+30

Illinois Firm Registration No.: 184-000533

Stanley Consultants INC.

8501 West Higgins Road, Suite 730, Chicago, Illinois 60631-2801
www.stanleygroup.com

REVISIONS	
NAME	DATE

ILLINOIS DEPARTMENT OF TRANSPORTATION

FAI-70
TYPICAL SECTIONS
SHEET 3 OF 7

SCALE: VERT. NONE HORIZ.
DATE: AUGUST 31, 2001
DRAWN BY: E.D.
CHECKED BY: J.R.K.

$$$$$$$$$$$$FILENAME$$$$$$$$$$$$
$$$$DATE$$$

F.A.I. RTE.	SECTION	COUNTY	TOTAL SHEETS	SHEET NO.
70	•	CLARK	1034	19
STA.		TO STA.		
FED. ROAD DIST. NO.	ILLINOIS	FED. AID PROJECT		

• 12(53,54)R & (12-53)RA-2

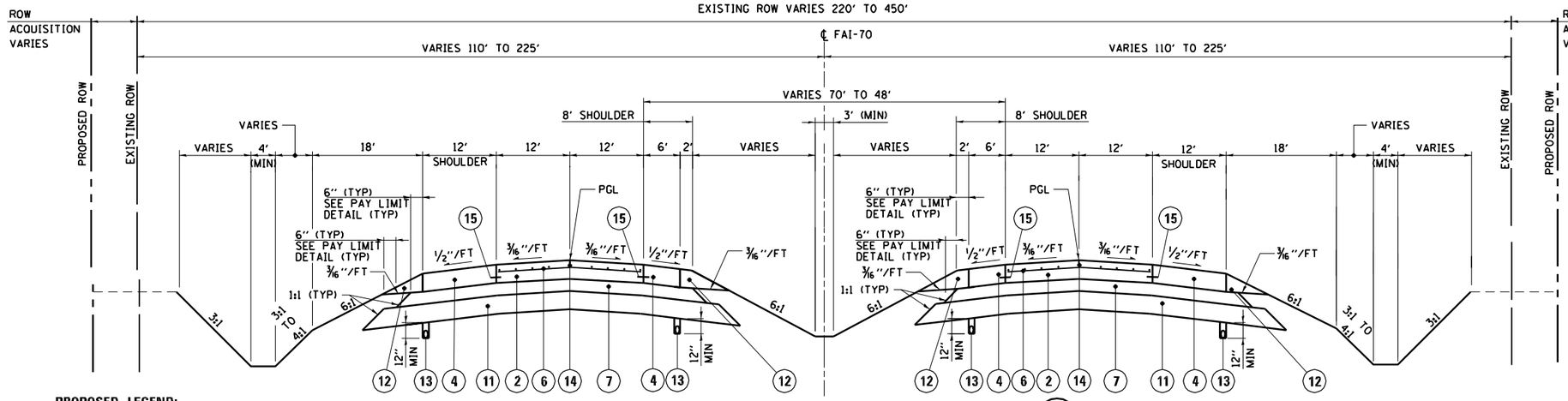

FAI-70 PAVEMENT REPLACEMENT PROPOSED TYPICAL SECTION (6)

PROPOSED LEGEND:

1. CONTINUOUSLY REINFORCED PORTLAND CEMENT CONCRETE PAVEMENT, 12"
2. CONTINUOUSLY REINFORCED PORTLAND CEMENT CONCRETE PAVEMENT, 13"
3. PORTLAND CEMENT CONCRETE SHOULDERS, 12"
4. PORTLAND CEMENT CONCRETE SHOULDERS, 13"
5. PAVEMENT REINFORCEMENT, 12"
6. PAVEMENT REINFORCEMENT, 13"
7. BITUMINOUS CONCRETE BINDER COURSE, SUPERPAVE, IL-19.0L (LOW ESAL) (672 LBS PER SQ YD)
8. BITUMINOUS CONCRETE BINDER COURSE, SUPERPAVE, IL-19.0L (LOW ESAL), VARIABLE DEPTH
9. SHOULDER REMOVAL AND REPLACEMENT, 5"
10. BITUMINOUS BASE COURSE WIDENING, SUPERPAVE, 8"
11. AGGREGATE SUBBASE, 12"
12. AGGREGATE SHOULDERS, TYPE B, VARIABLE DEPTH
13. PIPE UNDERDRAINS, 4"
14. SAWED LONGITUDINAL JOINT-30" LONG, #8 EPOXY COATED BARS AT 24" CENTERS
15. LONGITUDINAL CONSTRUCTION JOINT-30" LONG, #8 EPOXY COATED BARS AT 24" CENTERS
16. BITUMINOUS SURFACE REMOVAL, VARIABLE DEPTH (SEE NOTE 8)
17. LEVELING BINDER (MACHINE METHOD), SUPERPAVE, N50, VARIABLE DEPTH

REMOVAL ITEM

STA 1636+00 TO STA 1639+64 LT
STA 1636+00 TO STA 1639+42 RT
STA 1641+98 TO STA 110+74 LT
STA 1641+76 TO STA 110+74 RT
STATION EQUATION:
STA 1659+64.17 (BK) = STA 100+00.00 (AH)
STA 126+17 TO STA 135+68 LT
STA 126+17 TO STA 136+50 RT
STA 139+03 TO STA 140+57 LT
STA 139+84 TO STA 141+38 RT
STA 196+00 TO STA 214+12 LT
STA 196+00 TO STA 214+37 RT
STATION EQUATION:
STA 209+05.75 (BK) = STA 209+05.58 (AH)

STA 217+07 TO STA 218+61 LT
STA 217+33 TO STA 218+87 RT
STA 363+00 TO STA 368+13 LT
STA 363+00 TO STA 368+47 RT
STA 370+33 TO STA 382+00 LT
STA 370+67 TO STA 382+00 RT
STA 523+30 TO STA 527+39 LT & RT
STATION EQUATION:
STA 377+99.99 (BK) = STA 378+00.14 (AH)

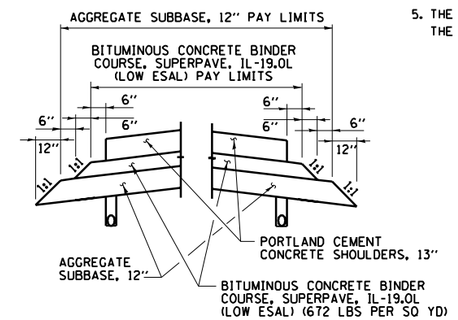

FAI-70 PAVEMENT RECONSTRUCTION PAY LIMIT DETAIL

NOTES:

1. FOR RUMBLE STRIP DETAIL, SEE FAI-70 TYPICAL SECTION SHEET 7 OF 7.
2. SEE PAVEMENT STANDARDS 420001 AND 483001 FOR JOINTING DETAILS.
3. SEE ROADWAY DETAILS FOR LUG SYSTEM DETAILS AND PAVEMENT TRANSITION DETAILS.
4. FOR PAVING OMISSIONS, SEE BRIDGE PLANS AT THE FOLLOWING LOCATIONS:

DESCRIPTION	STATION	TO STATION	SIDE
IL RTE 1 BRIDGE	1639+63.5	1641+98.0	LT
	1639+41.6	1641+76.1	RT
BIG CREEK BRIDGE	135+67.9	139+02.6	LT
	136+49.6	139+84.4	RT
EAST LITTLE CREEK BRIDGE	214+12.1	217+07.3	LT
	214+37.3	217+32.5	RT
CROOKED CREEK BRIDGE	368+12.9	370+32.9	LT
	368+47.1	370+67.1	RT
HAWKS CREEK BRIDGE	498+86.5	501+87.0	LT
	498+89.5	501+84.0	RT

5. THE OUTSIDE SHOULDER VARIES BETWEEN 12' AND 10' AT THE FOLLOWING LOCATIONS:

STATION	TO STATION	SIDE
1601+34.80	1605+74.19	LT
1601+44.40	1605+76.96	RT
1637+98.11	1643+70.29	LT
1637+70.81	1643+43.28	RT
123+08.13	127+27.78	LT
122+43.72	126+68.89	RT
191+01.54	196+11.56	LT
192+11.14	196+43.17	RT
212+24.40	218+83.39	LT
212+60.25	219+20.33	RT
341+85.05	346+14.61	LT
341+85.01	346+14.64	RT
366+35.72	371+93.23	LT
366+86.16	372+46.63	RT
394+83.34	399+18.66	LT
394+88.64	399+13.32	RT
461+36.00	466+07.24	LT
460+31.43	465+09.27	RT
542+72.50	547+11.32	RT

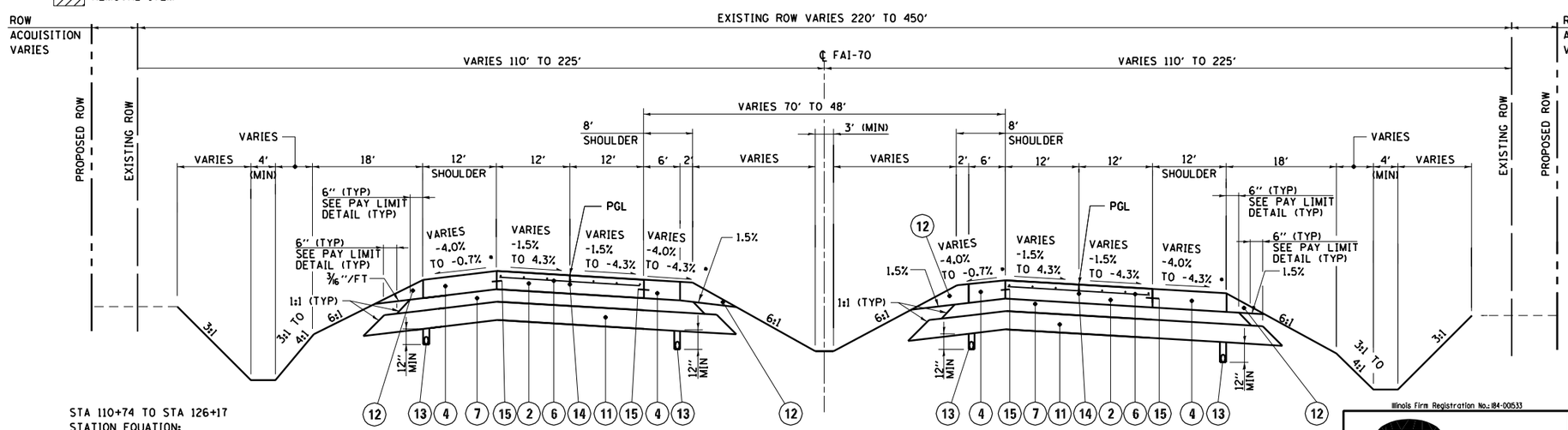

STA 110+74 TO STA 126+17
STATION EQUATION:
STA 115+50.10 (BK) = STA 115+50.76 (AH)
STATION EQUATION:
STA 125+99.82 (BK) = STA 126+00.00 (AH)
STA 527+39 TO STA 556+85

FAI-70 PAVEMENT REPLACEMENT PROPOSED SUPERELEVATED TYPICAL SECTION (7)

• THE ALGEBRAIC DIFFERENCE BETWEEN PAVEMENT AND SHOULDER SHALL NOT BE GREATER THAN 5%.

6. FOR DITCH LINING, SEEDING, AND EROSION CONTROL DETAILS, SEE FAI-70 DRAINAGE DETAILS SHEETS.
7. REFER TO PLAN DETAILS, MAINLINE WEIGH-IN-MOTION SYSTEM SHEETS FOR TYPICAL SECTIONS AT THE FOLLOWING LOCATION: STA 352+45 TO STA 356+54 LT.
8. REFER TO SCHEDULE OF QUANTITIES FOR APPROXIMATE RANGE OF THICKNESS OF BITUMINOUS SURFACE REMOVAL, VARIABLE DEPTH.
9. STATION EQUATIONS OCCUR AT THE FOLLOWING LOCATIONS:

STA 1659+64.17 (BK) = STA 100+00.00 (AH)
STA 115+50.10 (BK) = STA 115+50.76 (AH)
STA 125+99.82 (BK) = STA 126+00.00 (AH)
STA 151+13.41 (BK) = STA 151+13.23 (AH)
STA 209+05.75 (BK) = STA 209+05.58 (AH)
STA 222+17.91 (BK) = STA 222+18.09 (AH)
STA 358+02.96 (BK) = STA 352+02.80 (AH)
STA 377+99.99 (BK) = STA 378+00.14 (AH)
STA 465+18.09 (BK) = STA 465+09.57 (AH)
STA 511+98.86 (BK) = STA 512+07.39 (AH)

REVISIONS	
NAME	DATE

Illinois Firm Registration No.: 184-001533
Stanley Consultants INC.
8501 West Higgins Road, Suite 730, Chicago, Illinois 60631-2801
www.stanleygroup.com

ILLINOIS DEPARTMENT OF TRANSPORTATION

FAI-70
TYPICAL SECTIONS
SHEET 4 OF 7

SCALE: VERT. HORIZ. NONE
DATE: AUGUST 31, 2001
DRAWN BY: E.D.
CHECKED BY: J.R.K.

$$$$$$$$$$$$FILENAME$$$$$$$$$$$$$
$$$$DATE$$$