Bench Mark: Chiseled "□" on N.W. wingwall of structure 003-0026, Elev. 496.90

Existing Structure: S.N. 003-0026 Built 1931 as S.B.I. Rt. 160 Sec. 139B at Station 2049+35 as a simple span reinforced concrete slab bridge 32'-0" Bk.-Bk. abutments supported on untreated timber piles. Bridge repairs & bituminous overlay in 1988. Existing bridge to be removed & replaced.
Traffic to be maintained utilizing stage construction.

STATE OF ILLINOIS
DEPARTMENT OF TRANSPORTATION

APPROVED
AS A BASIS FOR
PREPARATION OF DETAILED PLANS
JUL 29 2005

ROUTE NO.	SECTION	COUNTY	TOTAL SHEETS	SHEET NO.
-	-	-		
-				
FED. ROAD DIST. NO. 7	ILLINOIS	FED. AID PROJECT-		

SHEET NO. 1
1 SHEETS

Contract #76391

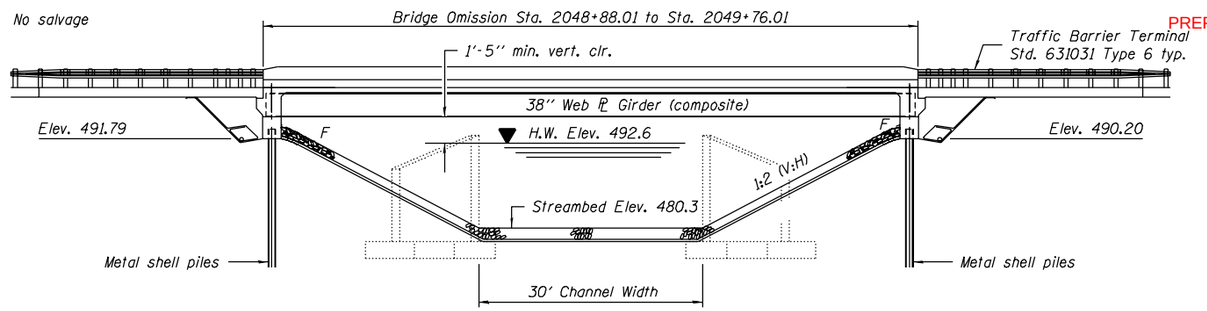

ELEVATION

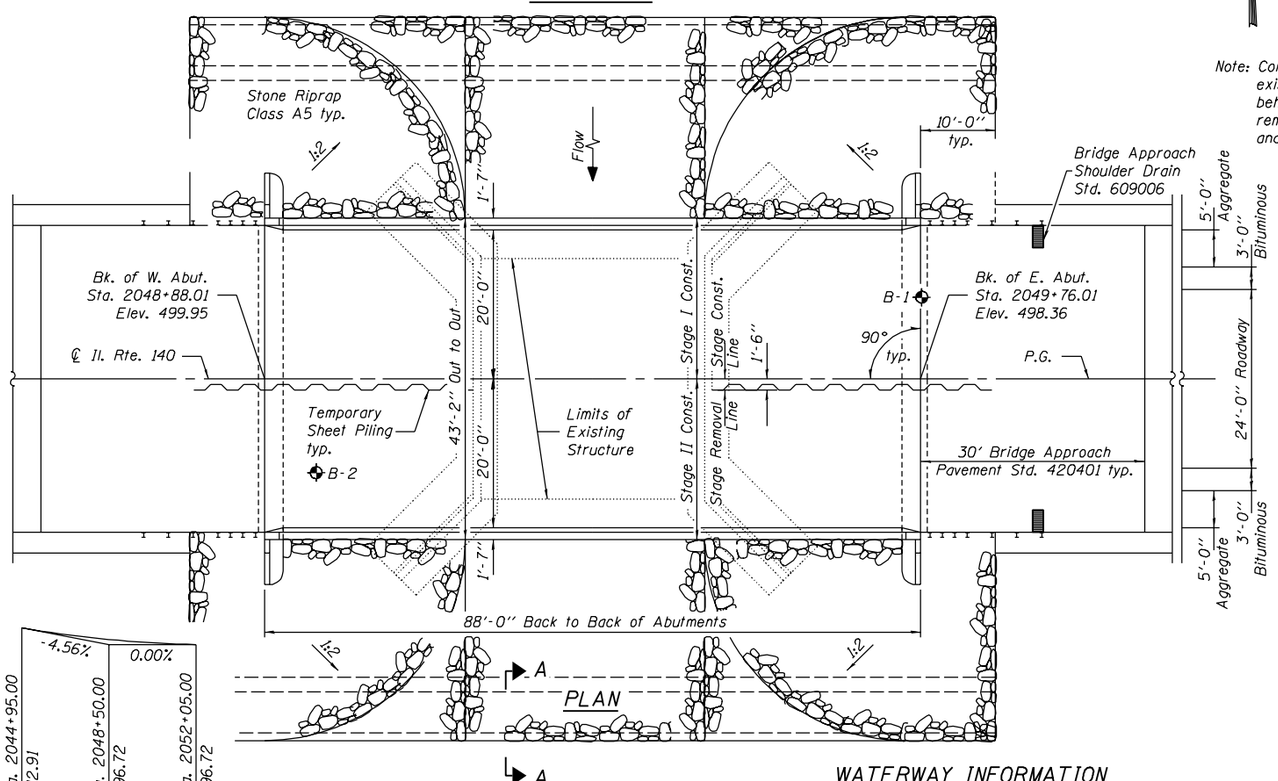

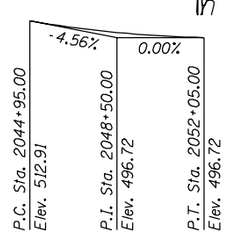

PROFILE GRADE
(along ℄ roadway)

Note: Contractor shall temporary brace existing abutments or excavate behind existing abutments during removal of existing superstructure and substructure.

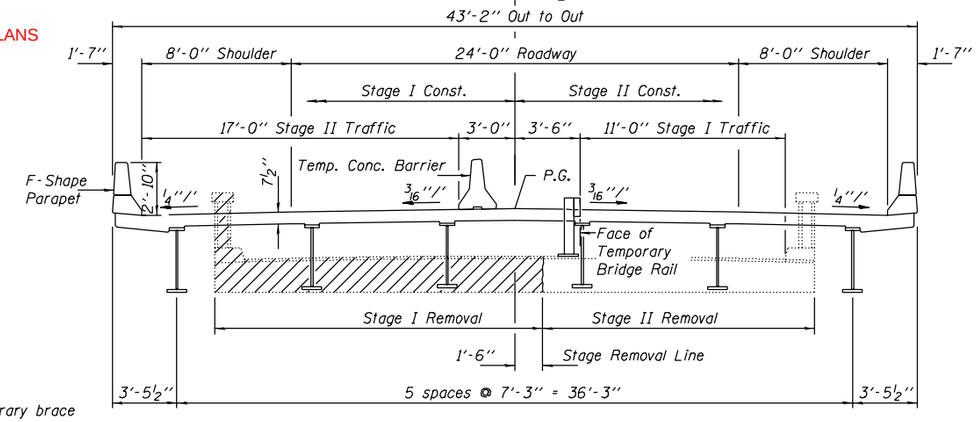

CROSS SECTION
(Looking East)

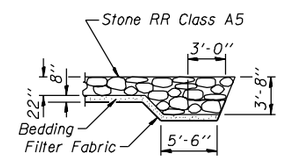

SECTION A-A

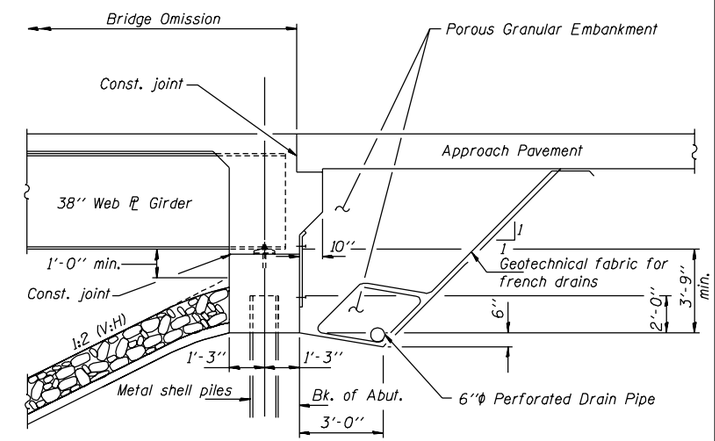

SECTION THRU INTEGRAL ABUTMENT

HIGHWAY CLASSIFICATION

F.A.P. Rte. 785 - Il. Rte. 140
Functional Class: Minor Arterial (Rural)
ADT: 5,200 (2004); 7,000 (2024)
DHV: 520
Design Speed: 55 m.p.h.
Posted Speed: 55 m.p.h.

LOADING HL-93

Allow 50#/sq. ft. for future wearing surface.

DESIGN SPECIFICATIONS

AASHTO LRFD Bridge Design Specifications, US. 3rd. Edition - 2004

DESIGN STRESSES

FIELD UNITS

f'_c = 3,500 psi
f_y = 50,000 psi (structural steel)
f_y = 60,000 psi (reinforcement)

SEISMIC DATA

Seismic Performance Zone (SPZ) = 2
Bedrock Acceleration Coefficient (A) = .085%g
Site Coefficient (S) = 1.0

WATERWAY INFORMATION

Exist. Low Grade Elev. 496.4 ft. @ Sta. 2064+13
Prop. Low Grade Elev. 496.4 ft. @ Sta. 2064+13

Drainage Area = 170 mi.²

Flood	Freq. Yr.	Q ft³/s Exist./Prop.	Opening Sq. Ft. Exist.	Opening Sq. Ft. Prop.	Nat. H.W.E.	Head - Ft. Exist.	Head - Ft. Prop.	Headwater El. Exist.	Headwater El. Prop.
	10	1761/1839	310	545	491.0	1.3	1.1	492.3	492.1
Floodplain	Total	7550	1760	1958	-	-	-	-	-
Design	50	3852/4832	358	667	492.6	1.9	1.5	494.5	494.1
Floodplain	Total	14250	2347	2664	-	-	-	-	-
Base	100	2909/4566	391	760	493.7	2.6	2.1	496.3	495.8
Floodplain	Total	19456	2619	2941	-	-	-	-	-
Overtop (E)	105	3086/6160	394	768	493.8	2.6	-	496.4	-
Floodplain	Total	20050	2622	2980	-	-	-	-	-
Overtop (P)	133	3658/6358	406	804	494.2	-	2.2	-	496.4
Floodplain	Total	22000	2622	2980	-	-	-	-	-

10 year velocity through Exist. Bridge = 4.7 fps 10 year velocity through Prop. Bridge = 3.5 fps

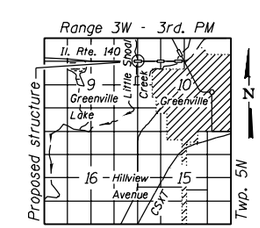

LOCATION SKETCH

GENERAL PLAN
ILLINOIS ROUTE 140 OVER
LITTLE SHOAL CREEK
F.A.P. ROUTE 785 - SECTION 139BR
BOND COUNTY
STATION 2049+33.51
STRUCTURE NO. 003-0061

DESIGNED	R.J. Chaput
CHECKED	-
DRAWN	W.D. Collins
CHECKED	M.K. Christensen

- 200

EXAMINED
ENGINEER OF BRIDGE DESIGN

PASSED
ENGINEER OF BRIDGES AND STRUCTURES