Bench Mark: Chiseled "x" N.E. wingwall of abandoned bridge west of I-57 @ approximate Sta. 26+50. Elev. 698.12

Existing Structure: None

STATE OF ILLINOIS
DEPARTMENT OF TRANSPORTATION

ROUTE NO.	SECTION	COUNTY	TOTAL SHEETS	SHEET NO.
-	-	-		
FED. ROAD DIST. NO. 7		ILLINOIS	FED. AID PROJECT-	

SHEET NO. 1
2 SHEETS

Contract #

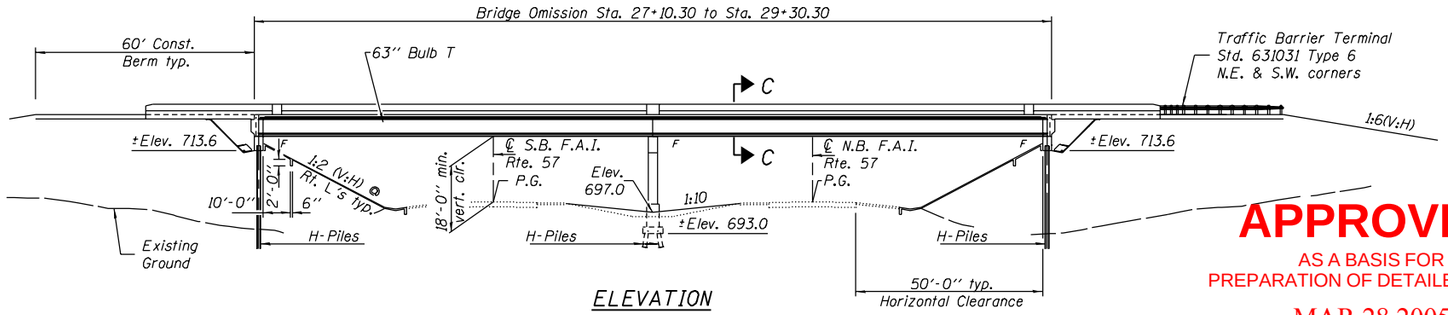

ELEVATION

APPROVED
AS A BASIS FOR
PREPARATION OF DETAILED PLANS
MAR 28 2005

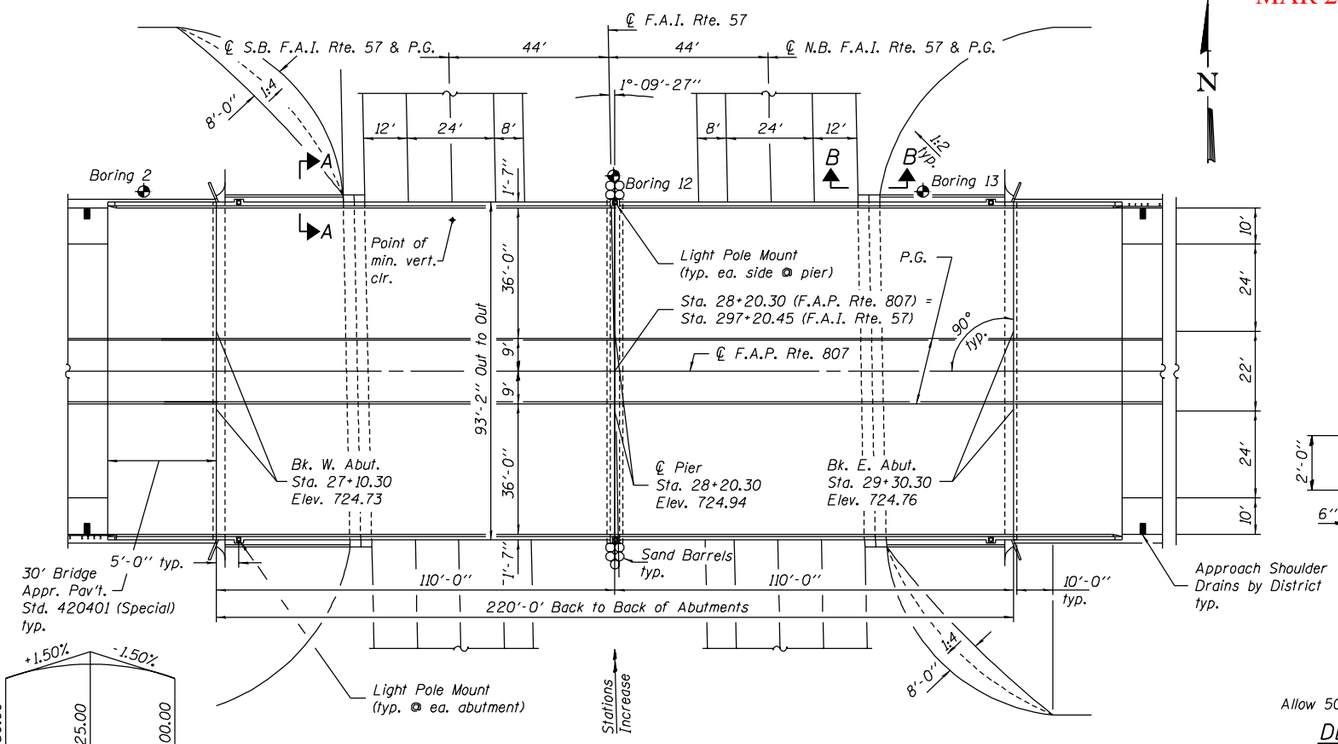

PLAN

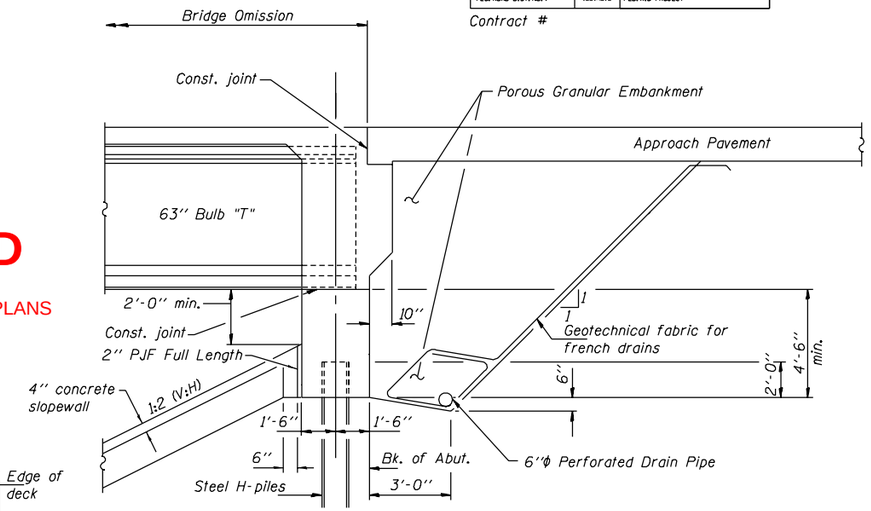

SECTION THRU INTEGRAL ABUTMENT

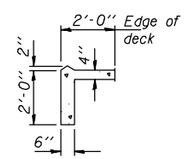

SECTION A-A

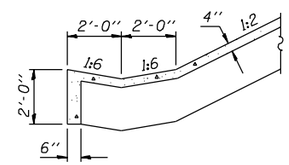

SECTION B-B

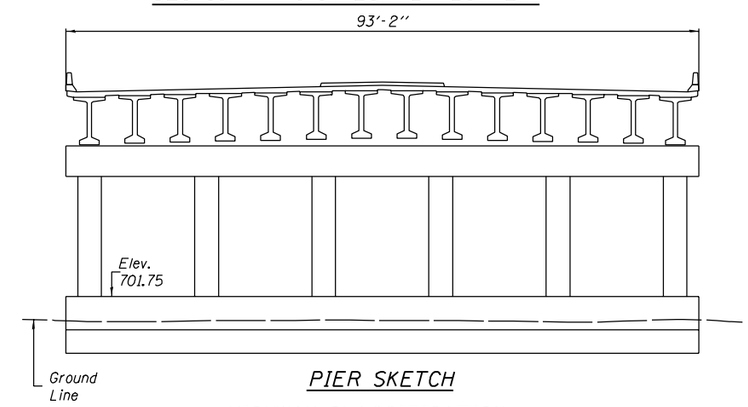

PIER SKETCH

HIGHWAY CLASSIFICATION

F.A.I. Rte. 57 - I-57
Functional Class: Interstate
ADT: 19,000 (2001); 28,000 (2021) two way
ADTT: 35.3% DHV: 1.950
Design Speed: 65 m.p.h.
Posted Speed: 65 m.p.h.

F.A.P. Rte. 807 - Curtis Road
Functional Class: Other Principal Arterial
ADT: 6,000 (2006); 23,600 (2026)
ADTT: 5.6% DHV: 1.900
Design Speed: 60 m.p.h.
Posted Speed: 50 m.p.h.

LOADING HS20-44
Allow 50#/sq. ft. for Future Wearing Surface.

DESIGN SPECIFICATIONS
2002 AASHTO

DESIGN STRESSES

FIELD UNITS
f'_c = 3,500 psi
f_y = 60,000 psi (reinforcement)

PRECAST PRESTRESSED UNITS
f'_c = 6,000 psi
f'_{ci} = 5,000 psi
f'_s = 270,000 psi (½"Φ low lax. strands)
f_{si} = 201,960 psi (½"Φ low lax strands)

SEISMIC DATA
Seismic Performance Category (SPC) = A
Bedrock Acceleration Coefficient (A) = 4.8%g
Site Coefficient (S) = 1.2

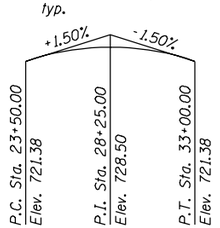

PROFILE GRADE
(along P.G. F.A.P. Rte. 807)

Notes:
1. Limestone color concrete staining shall be applied to the outside of parapet, exposed deck below parapet and the fascia beam.
2. Limestone form liner to be used on outside face of parapet.
3. Designer, make provisions for future drilling and grouting of railing (same as R20).

DESIGNED	A.Y. Vinson
CHECKED	A. Siudyla
DRAWN	W.D. Collins
CHECKED	A. Siudyla

- 200

EXAMINED
ENGINEER OF BRIDGE DESIGN

PASSED
ENGINEER OF BRIDGES AND STRUCTURES

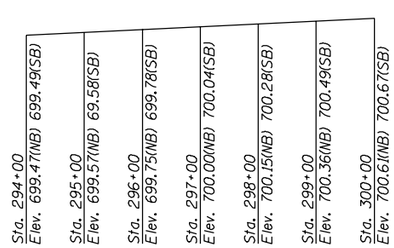

PROFILE GRADE
(along ℄ Rdwy. F.A.I. Rte. 57)

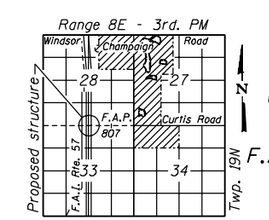

LOCATION SKETCH

GENERAL PLAN
CURTIS ROAD (F.A.P. ROUTE 807) OVER
I-57
F.A.I. ROUTE 57 - SECTION 10-32HB-3.K
CHAMPAIGN COUNTY
STATION 297+20.45
STRUCTURE NO. 010-0272

STATE OF ILLINOIS
DEPARTMENT OF TRANSPORTATION

ROUTE NO.	SECTION	COUNTY	TOTAL SHEETS	SHEET NO.
-	-	-		
FED. ROAD DIST. NO. 7	ILLINOIS	FED. AID PROJECT-		

SHEET NO. 2
2 SHEETS

Contract #

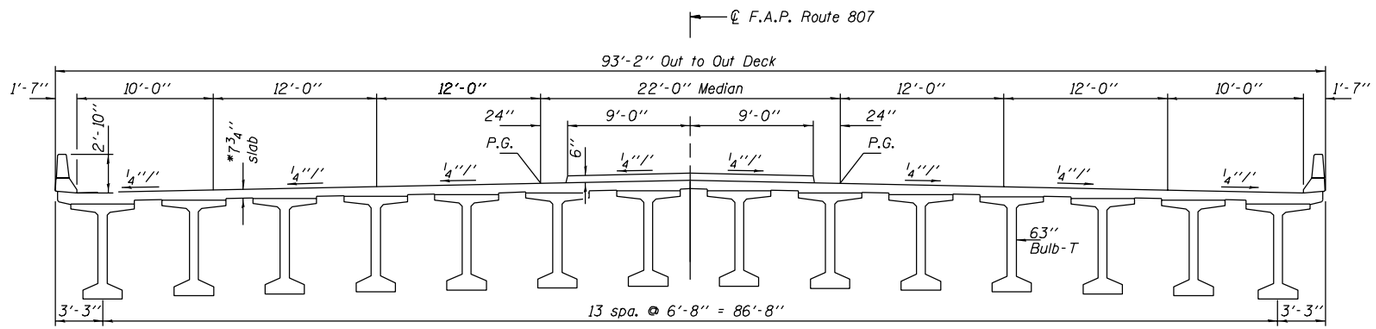

CROSS SECTION
(Sym. about ℄ F.A.P. Rte. 807)
*Use Bridge Smoothness Specification

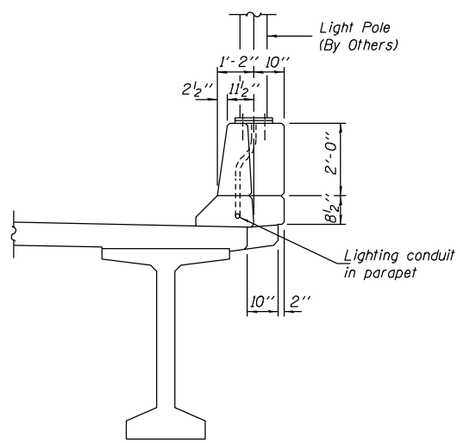

SECTION C-C

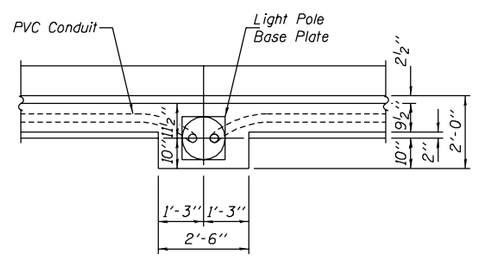

PLAN VIEW OF LIGHT POLE MOUNTED ON CONCRETE PARAPET

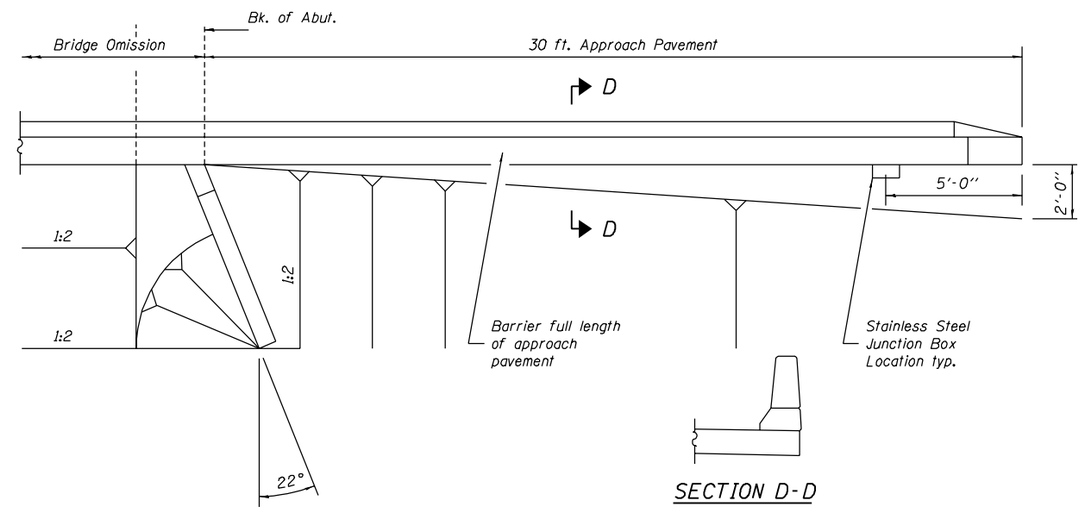

SECTION D-D

APPROACH PAVEMENT AND TRAFFIC BARRIER DETAILS

DESIGNED - A.Y. Vinson	- 200
CHECKED - A. Siudyla	EXAMINED
DRAWN - W.D. Collins	ENGINEER OF BRIDGE DESIGN
CHECKED - A. Siudyla	PASSED
	ENGINEER OF BRIDGES AND STRUCTURES

DETAILS
CURTIS ROAD (F.A.P. ROUTE 807) OVER I-57
F.A.I. ROUTE 57 - SECTION 10-32HB-3.K
CHAMPAIGN COUNTY
STATION 297+20.45
STRUCTURE NO. 010-0272