F.A.I. RTE.	SECTION	COUNTY	TOTAL SHEETS	SHEET NO.
XX/XX	XXXXXXXX	COOK	XXX	XXX
STA.		TO STA.		
XXX. XXXX XXXX. XX. X		ILLINOIS	XXX. XXX XXXXXXX	

CONTRACT # XXXXX

BENCH MARK: TBM #1 - Elev. 689.00 Top of Brass Survey Monument located at the west edge of the LaGrange Road SB Pavement, 600 feet North of SW Highway Bridge.

EXISTING STRUCTURE: 89'-3" Simple span Steel Through Girder R.R. Bridge, Constructed in 1940. For the Wabash Railway Company, Inventoried as Bridge No. 1043A. Substructure consists of Concrete cantilever-type Abutments on Timber Piles. Bridge is Presently Maintained by Metra. Structure No. 016-0345. No Salvage.

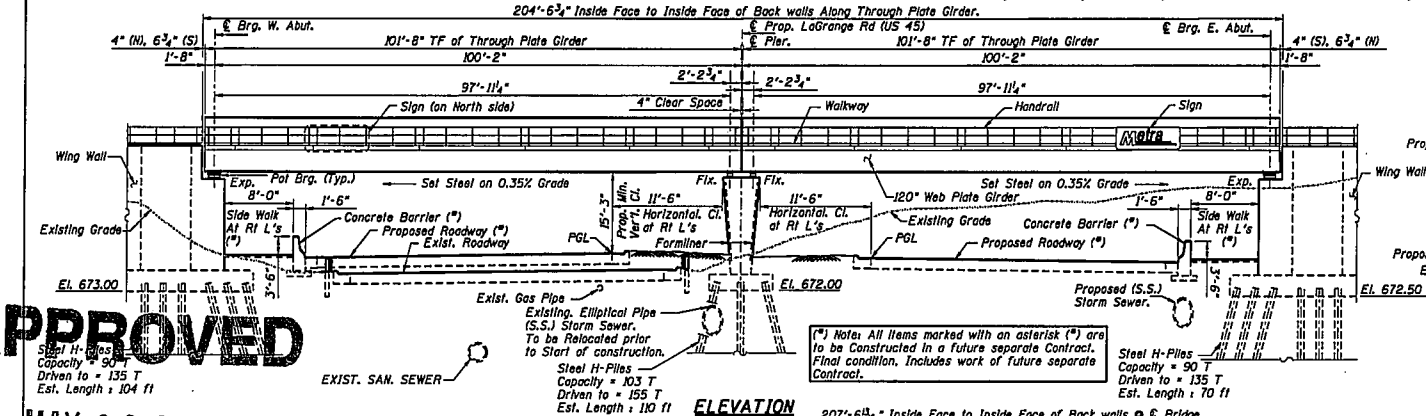

(*) Note: All items marked with an asterisk (*) are to be Constructed in a future separate Contract. Final condition. Includes work of future separate Contract.

ELEVATION

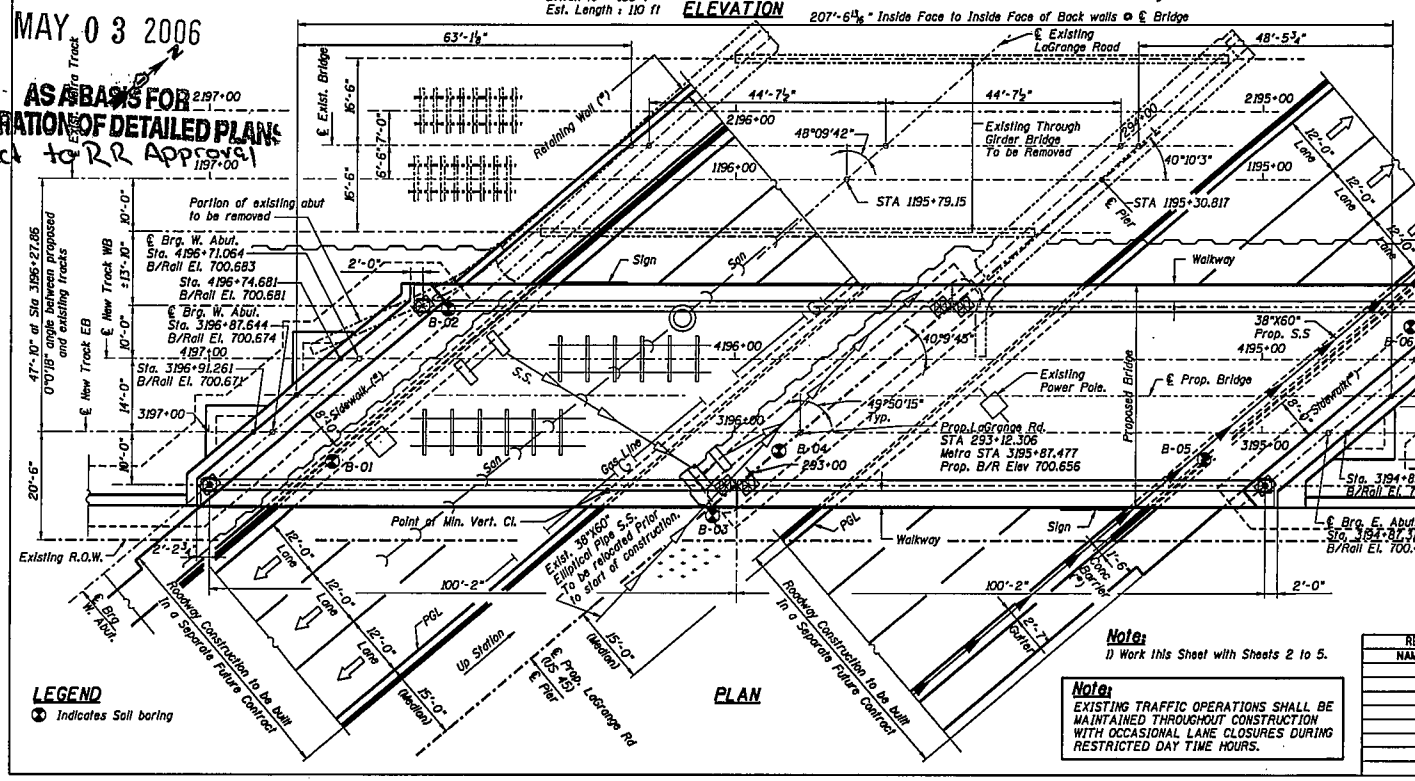

PLAN

LOCATION SKETCH

SHEET-1/5

TOP OF RAIL ELEVATIONS

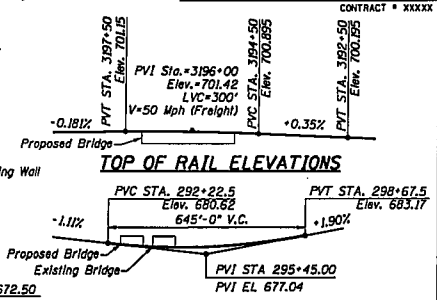

PROP. PROFILE GRADE-LAGRANGE RD

HIGHWAY CLASSIFICATION

FAP Route 330, US 45 (LaGrange Road)
Functional Class: Other Urban Principal Arterial and Strategic Regional Arterial
ADT: 47,000(2000) 52,000(2030) ADTT: 1900(2000) 2100(2030)
DHV: 2600 AM/2300 PM (2030)
Design Speed: 45 mph; Posted Speed: 35 mph

DESIGN NOTES

1. Specifications for Design and Materials:
   A.R.E.M.A. Manual for Railway Engineering 2004.
2. Loading:
   Cooper E-80 With Diesel Impact
   30" Maximum design ballast.
   Max. Live Load plus Impact Deflection Criteria L/640 for Railroad Super Structure.
3. Design Stresses:
   f'c = 3,500 Psi (Concrete)
   fy = 60,000 Psi (Reinforcing Steel)
   fy = 50,000 Psi (M270 Grade 50 Structural Steel).

LEGEND

Indicates Soil boring

Note:
1) Work this Sheet with Sheets 2 to 5.

Note:
EXISTING TRAFFIC OPERATIONS SHALL BE MAINTAINED THROUGHOUT CONSTRUCTION WITH OCCASIONAL LANE CLOSURES DURING RESTRICTED DAY TIME HOURS.

REVISIONS	
NAME	DATE

ILLINOIS DEPARTMENT OF TRANSPORTATION
METRA OVER US 45 (LAGRANGE ROAD)

TYPE, SIZE & LOCATION DRAWING
GENERAL PLAN & ELEVATION

FAP ROUTE 330 SECTION 102VB COOK COUNTY
STA: 293+12.31 STRUCTURE NO. 016-6201
DESIGNED BY KJH DRAWN BY MGB
DATE: March 8, 2006 CHECKED BY MGB CHECKED BY AWW

*APPROVED
MAY 03 2006
AS A BASIS FOR PREPARATION OF DETAILED PLANS
*Subject to RR Approval

F.A.I. RTE.	SECTION	COUNTY	TOTAL SHEETS	SHEET NO.
XX/XX	XXXX.XXXX	COOK	XXX	XXX
STA.		TO STA.		
XXX. XXXX XXXX. XX. X		ILLINOIS	XXX. XXX XXXXXXX	

CONTRACT # XXXXX

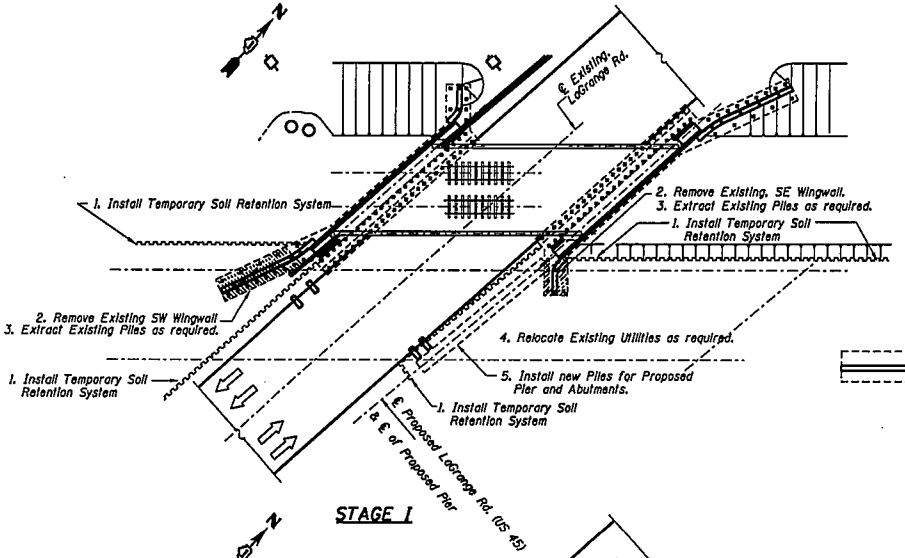

STAGE I

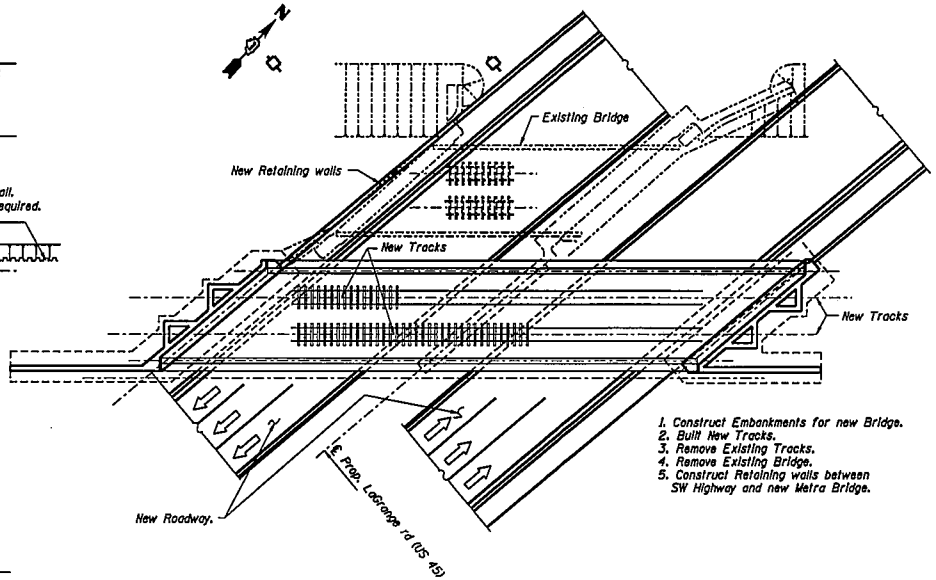

STAGE III (FUTURE WORK IN SEPARATE CONTRACT)

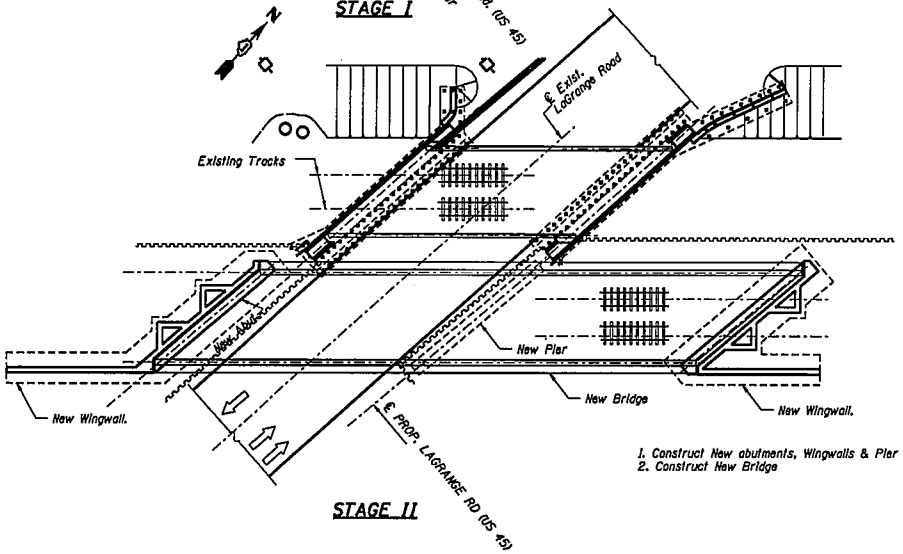

STAGE II

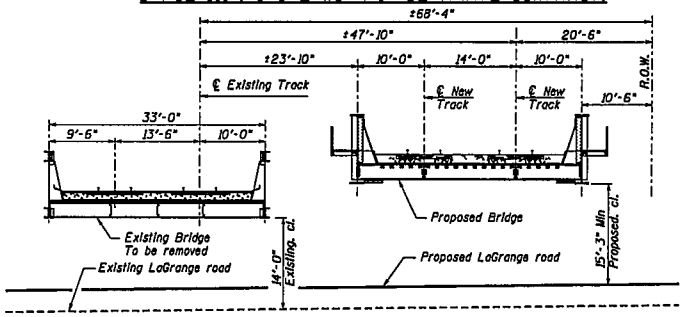

SECTION THRU EXISTING AND PROPOSED BRIDGES

(LOOKING EAST)

SHEET-2/5

REVISIONS	
NAME	DATE

ILLINOIS DEPARTMENT OF TRANSPORTATION
METRA OVER US 45 (LAGRANGE ROAD)

TYPE, SIZE & LOCATION DRAWING
STAGING, GENERAL DETAILS

FAP ROUTE 330 SECTION 102VB COOK COUNTY
STA: 293+12.31 STRUCTURE NO. 016-6201

DESIGNED BY KJH DRAWN BY KJH/MGB
DATE: March 8, 2006 CHECKED BY MGB CHECKED BY AWW

F.A.I. RTE.	SECTION	COUNTY	TOTAL SHEETS	SHEET NO.
XX/XX	(XXX.XXX)	COOK	XXX	XXX
STA.		TO STA.		
XXX. XXXX XXXX. XX. X		ILLINOIS	XXX. XXX XXXXXXX	

CONTRACT # XXXXX

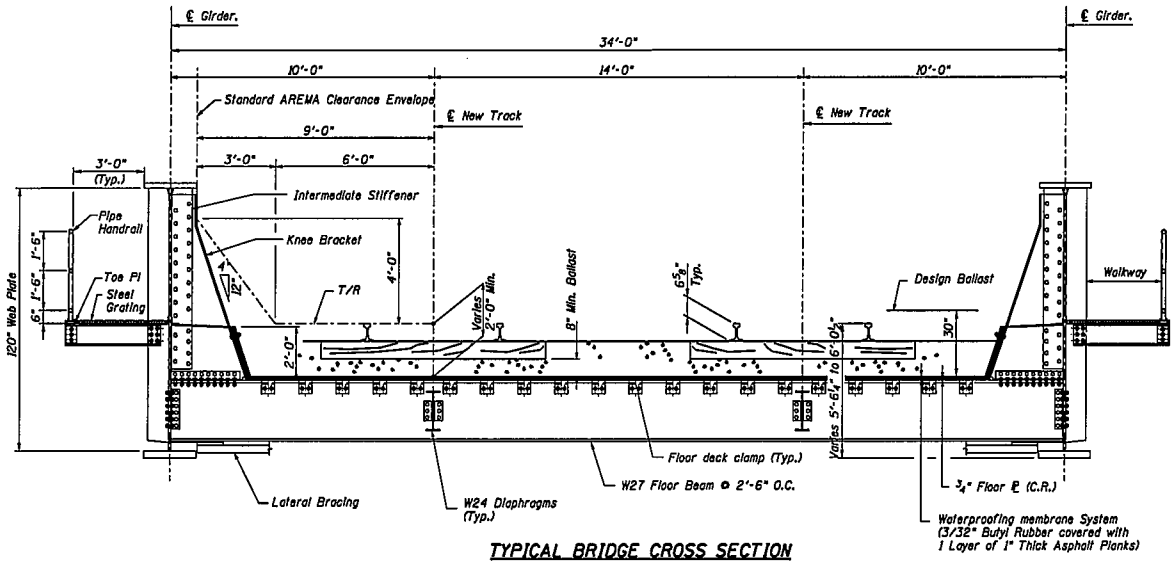

TYPICAL BRIDGE CROSS SECTION

SCALE: NTS

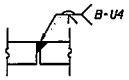

DETAIL B

SCALE: NTS

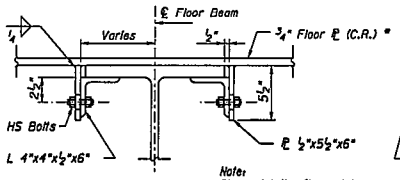

Note:
Clamp details, floor plate details, etc. are subject to refinement during final design.

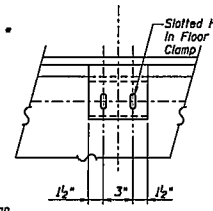

FLOOR PLATE CLAMP

SCALE: NTS

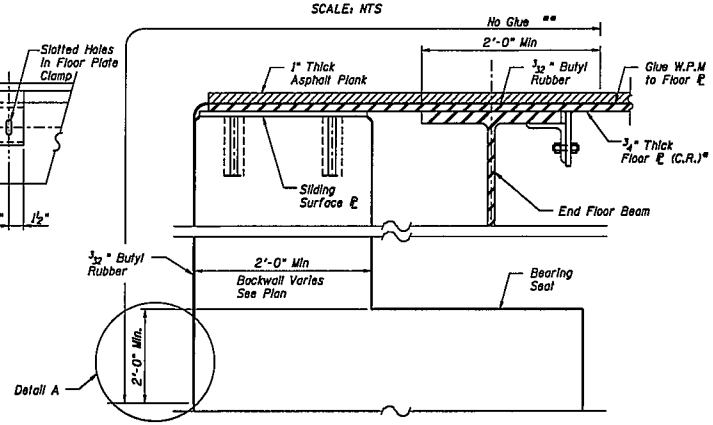

FLOOR PLATE AT ABUTMENT

SCALE: NTS

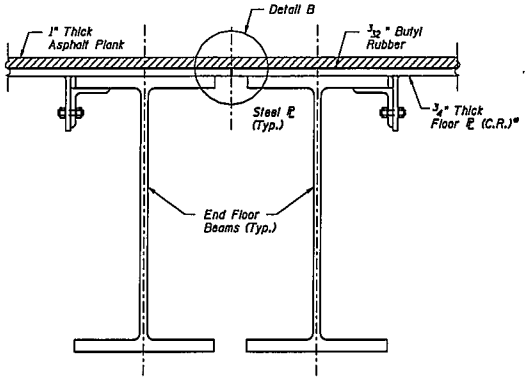

FLOOR PLATE JOINT AT PIER

SCALE: NTS

* (C.R.) Denotes Corrosion Resistant

** No Glue. The Water Proofing Membrane (3/32" Butyl Rubber) in this area shall not adhere to the Floor Plate or the Abutment Backwall.

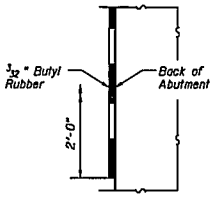

DETAIL A

SCALE: NTS

SHEET-3/5

REVISIONS	
NAME	DATE

ILLINOIS DEPARTMENT OF TRANSPORTATION
METRA OVER US 45 (LAGRANGE ROAD)

TYPE, SIZE & LOCATION DRAWING
GENERAL SUPERSTRUCTURE DETAILS

FAP ROUTE 330 SECTION 102VB COOK COUNTY
STA: 293+12.31 STRUCTURE NO. 016-6201

DESIGNED BY KJH DRAWN BY MGB
DATE: March 8, 2006 CHECKED BY MGB CHECKED BY AWW

F.A.I. RTE.	SECTION	COUNTY	TOTAL SHEETS	SHEET NO.
XX/XX	XXXXXXXX	COOK	XXX	XXX
STA.		TO STA.		
XXX. XXXX XXXX. XX. X		ILLINOIS	XXX. XXX XXXXXXX	

CONTRACT # XXXXX

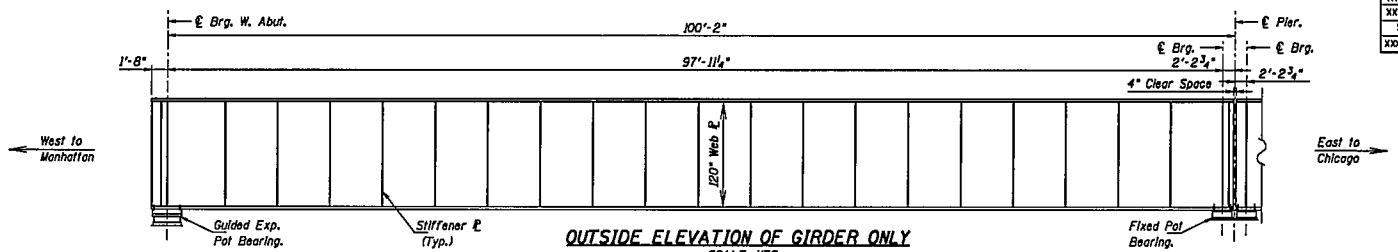

OUTSIDE ELEVATION OF GIRDER ONLY

SCALE: NTS

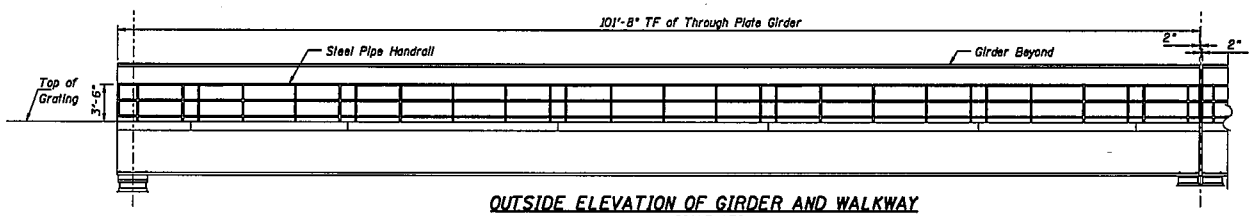

OUTSIDE ELEVATION OF GIRDER AND WALKWAY

SCALE: NTS

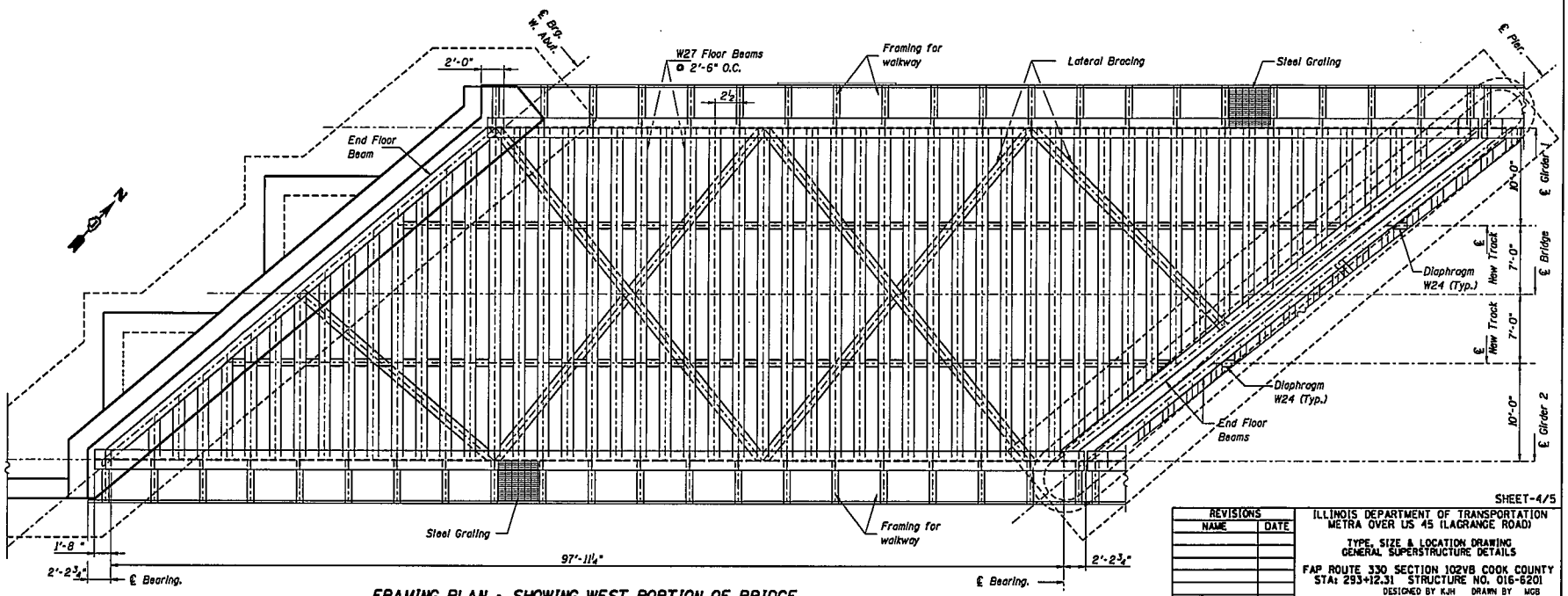

FRAMING PLAN - SHOWING WEST PORTION OF BRIDGE

SCALE: NTS

SHEET-4/5

REVISIONS	
NAME	DATE

ILLINOIS DEPARTMENT OF TRANSPORTATION
METRA OVER US 45 (LAGRANGE ROAD)

TYPE, SIZE & LOCATION DRAWING
GENERAL SUPERSTRUCTURE DETAILS

FAP ROUTE 330 SECTION 102VB COOK COUNTY
STA: 293+12.31 STRUCTURE NO. 016-6201

DESIGNED BY KJH DRAWN BY MGB
DATE: March 8, 2006 CHECKED BY MGB CHECKED BY AWW

F.A.I. RTE.	SECTION	COUNTY	TOTAL SHEETS	SHEET NO.
XX/XX	XXXX.XXXI	COOK	XXX	XXX
STA.		TO STA.		
XXX. XXXX XXXX. XX. X		ILLINOIS	XXX. XXX XXXXXXX	

CONTRACT # XXXXX

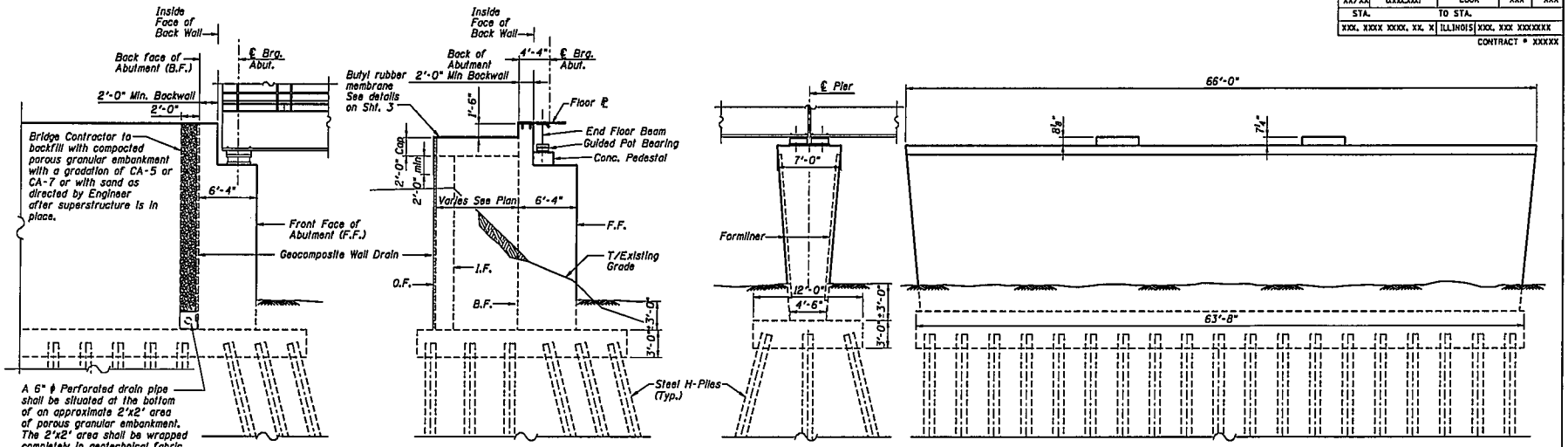

ABUTMENT END VIEW
SCALE: NTS

ABUTMENT SECTION
SCALE: NTS

PIER END VIEW
SCALE: NTS

PIER ELEVATION
SCALE: NTS

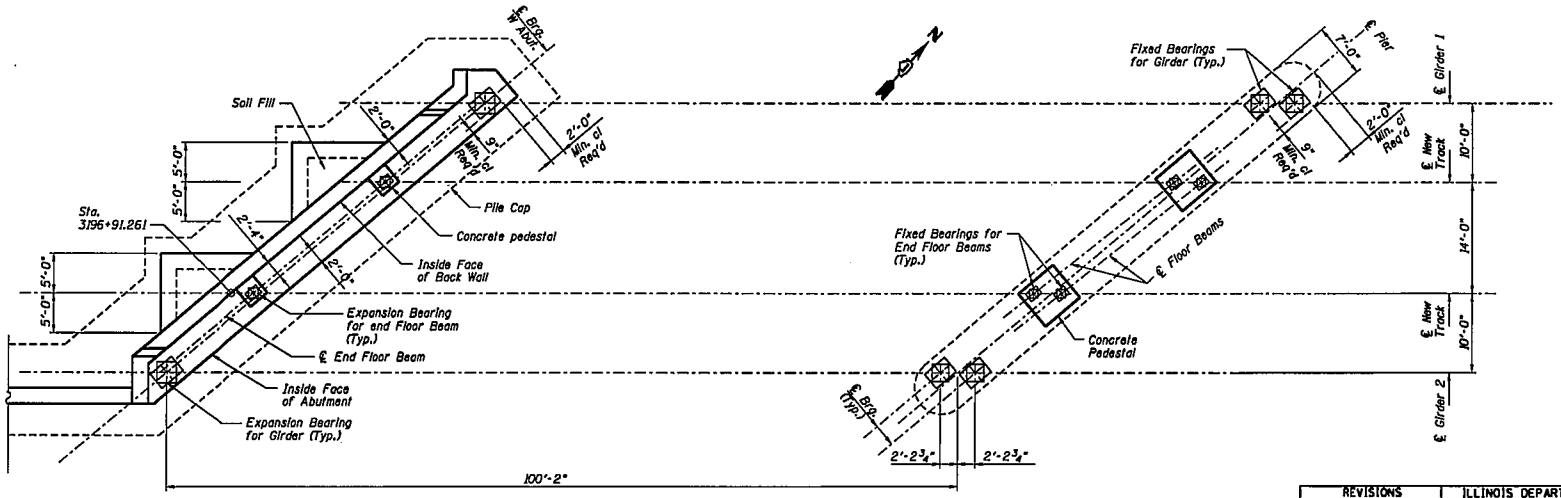

SUBSTRUCTURE PLAN SHOWING WEST PORTION SYMMETRICAL BY ROTATION
SCALE: NTS

NOTE:

1) (**) Included in the cost of "Porous Granular Embankment".
2) Work this Sheet with Sheets 1 thru 4.

SHEET-5/5

REVISIONS	
NAME	DATE

ILLINOIS DEPARTMENT OF TRANSPORTATION
METRA OVER US 45 (LAGRANGE ROAD)

TYPE, SIZE & LOCATION DRAWING
GENERAL SUBSTRUCTURE DETAILS

FAP ROUTE 330 SECTION 102VB COOK COUNTY
STA: 293+12.31 STRUCTURE NO. 016-6201

DESIGNED BY KJH DRAWN BY MGB
DATE: March 8, 2006 CHECKED BY MGB CHECKED BY AWW