Bench Mark: BM#4676-2; 21.25' LT. @ Station 242+93.20, Elev. = 667.685

Existing Structure: S.N. 020-0010 was built in 1931 under S.B.I. Rte. 120, Section 113-B at Sta. 244+53 as a six simple span reinforced concrete deck girder bridge. In 1976 the substructure was widened and the superstructure replaced with simple span PPC deck beams. This work was under F.A. Rte. 721, Section 113BR at 244+53.00.
In 2002 four deck beams were replaced under F.A. Rte. 721, Section D5 Deck Beam Replace, 2002-1.
The original abutments & piers consist of solid walls on timber pile supported footings. The widened portion of the abutments are an open type supported by a single row of concrete piles. The widened portion of the piers are solid walls supported by a single row of concrete piles. The Bk. to Bk. Abut. dimension measures 318' while the O.-O. width measures 42'-0''. The structure is to be replaced using road closure.

STATE OF ILLINOIS
DEPARTMENT OF TRANSPORTATION

APPROVED
AS A BASIS FOR
PREPARATION OF DETAILED PLANS
JUL 01 2005

ROUTE NO.	SECTION	COUNTY	TOTAL SHEETS	SHEET NO.
F.A.P. 721	(113BR) BR	DEWITT		
FED. ROAD DIST. NO. 7	ILLINOIS	FED. AID PROJECT-		

SHEET NO. 1
1 SHEETS

Contract #70232

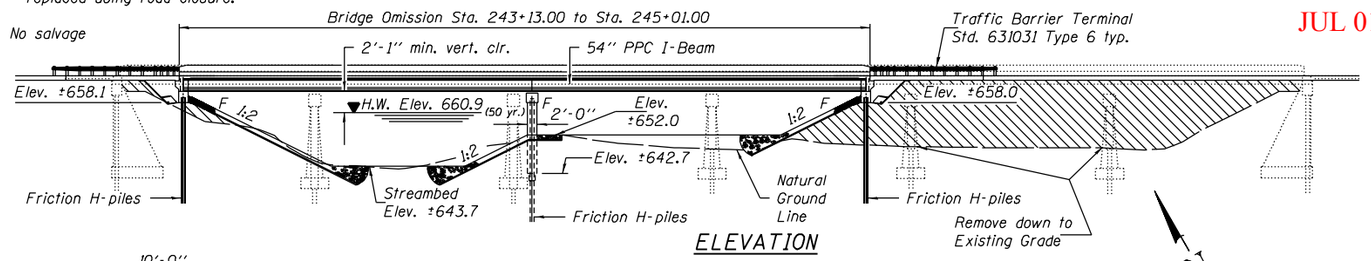

ELEVATION

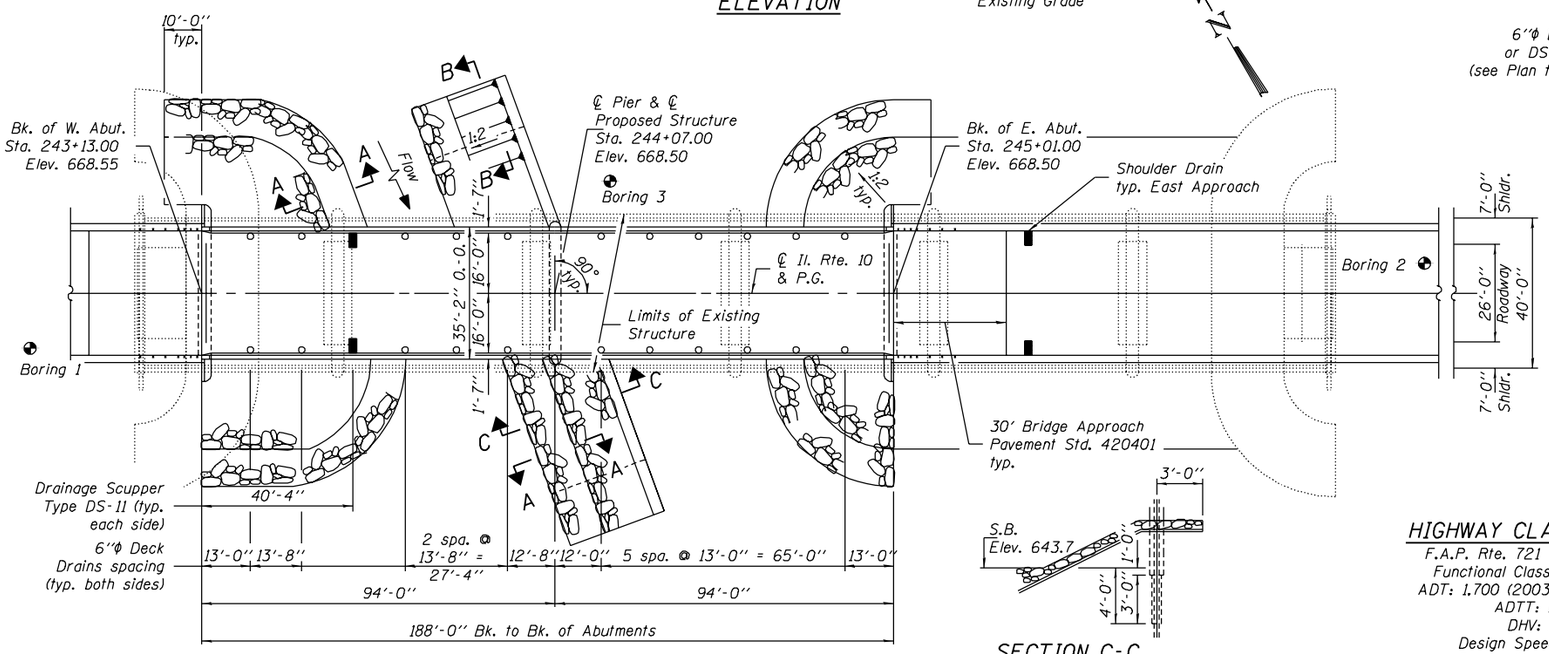

PLAN

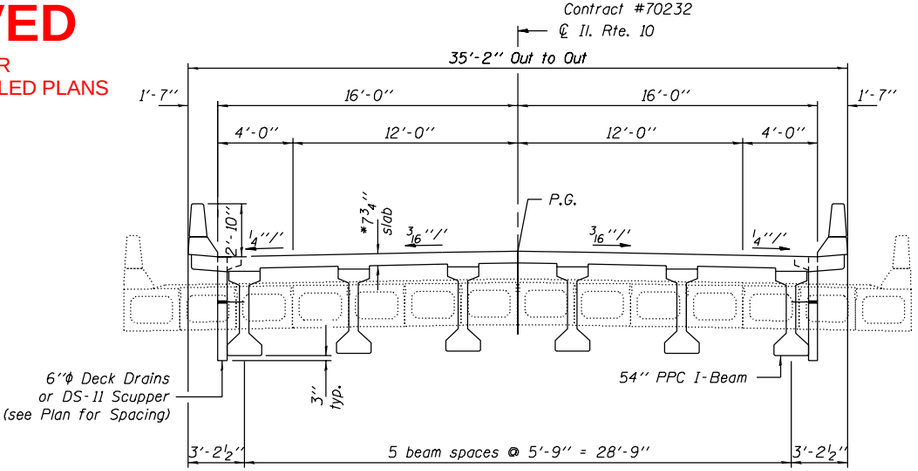

CROSS SECTION
*Use Bridge Smoothness Specification

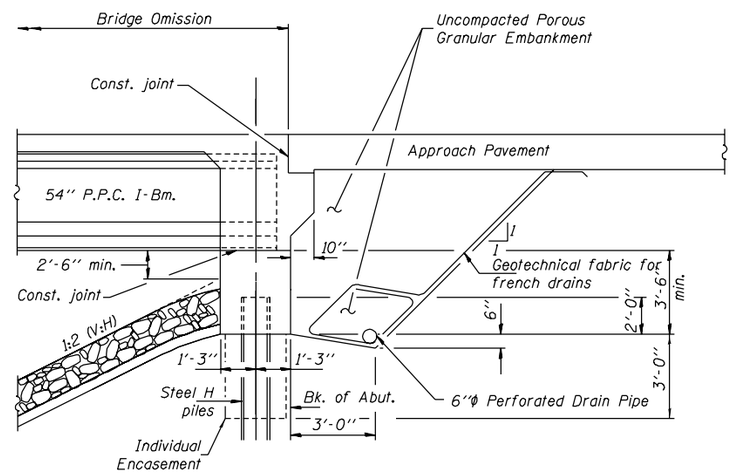

SECTION THRU INTEGRAL ABUTMENT

SECTION C-C

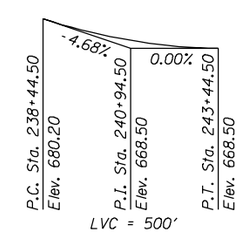

PROFILE GRADE
(along ℄ roadway)

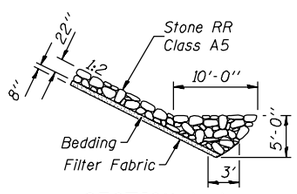

SECTION A-A

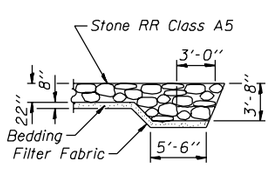

SECTION B-B

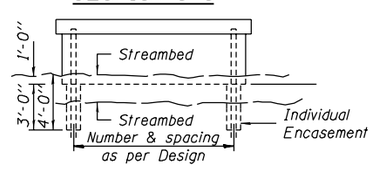

PIER SKETCH

HIGHWAY CLASSIFICATION

F.A.P. Rte. 721 - Il. Rte. 10
Functional Class: Minor Arterial
ADT: 1,700 (2003); 1,900 (2023)
ADTT: 17.5%
DHV: 175
Design Speed: 60 m.p.h.
Posted Speed: 55 m.p.h.

LOADING HS20-44

Allow 50#/sq. ft. for future wearing surface.

DESIGN SPECIFICATIONS

2002 AASHTO

DESIGN STRESSES

FIELD UNITS

f'_c = 3,500 psi
f_y = 60,000 psi (reinforcement)

PRECAST PRESTRESSED UNITS

f'_c = 6,000 psi
f'_{ci} = 5,000 psi
f'_s = 270,000 psi (½''ϕ low lax. strands)
f_{si} = 201,960 psi (½''ϕ low lax strands)

SEISMIC DATA

Seismic Performance Category (SPC) = A
Bedrock Acceleration Coefficient (A) = 4.6%g
Site Coefficient (S) = 1.0

WATERWAY INFORMATION

Exist. Low Grade Elev. 667.7 ft. @ Sta. 244+00
Drainage Area = 294 mi.² Prop. Low Grade Elev. 667.8 ft. @ Sta. 249+00

Flood	Freq. Yr.	Q C.F.S.	Opening Sq. Ft. Exist.	Opening Sq. Ft. Prop.	Nat. H.W.E.	Head - Ft. Exist.	Head - Ft. Prop.	Headwater El. Exist.	Headwater El. Prop.
	10	6964	2001	1489	659.1	0.3	0.5	659.4	659.6
Design	50	10385	2503	1812	660.9	0.3	0.8	661.2	661.7
Base	100	11816	2701	1917	661.6	0.4	1.0	662.0	662.6
Max. Calc.	500	15201	3104	2168	663.0	0.4	1.4	663.4	664.4

10 Yr. Velocity through Exist. Bridge = 3.5 fps 10 Yr. Velocity through Prop. Bridge = 4.8 fps

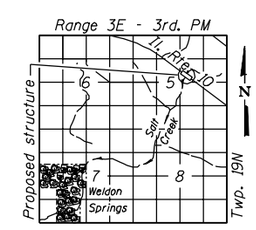

LOCATION SKETCH

GENERAL PLAN
ILLINOIS ROUTE 10 OVER
SALT CREEK
F.A.P. ROUTE 721 - SECTION (113BR)BR
DeWITT COUNTY
STATION 244+07.00
STRUCTURE NO. 020-0062

DESIGNED	A.Y. Vinson
CHECKED	J.A. Elston
DRAWN	W.D. Collins
CHECKED	A. Siudyla

EXAMINED _____ ENGINEER OF BRIDGE DESIGN
PASSED _____ ENGINEER OF BRIDGES AND STRUCTURES