*APPROVED

MAY 03 2005

04/20/2005 01:05:18 PM
M:\P40567\STRUCT\RETWALLTSL\SHT\101W0271.SHT

AS A BASIS FOR PREPARATION OF DETAILED PLANS
* Subject to RR Approval

STATE OF ILLINOIS
DEPARTMENT OF TRANSPORTATION

F.A.P. RTE.	SECTION	COUNTY	TOTAL SHEETS	SHEET NO.
307	130 R-2	DUPAGE,KANE	3	1
STA.		TO STA.		
FED. ROAD DIST. NO.	ILLINOIS	FED. AID PROJECT		

Benchmark: "D" Cut in SW Corner Concrete Base of Traffic Signal Box in NW Corner IL Rte. 64 & Powis Rd. Elev. 758.46

Existing Structure: None.

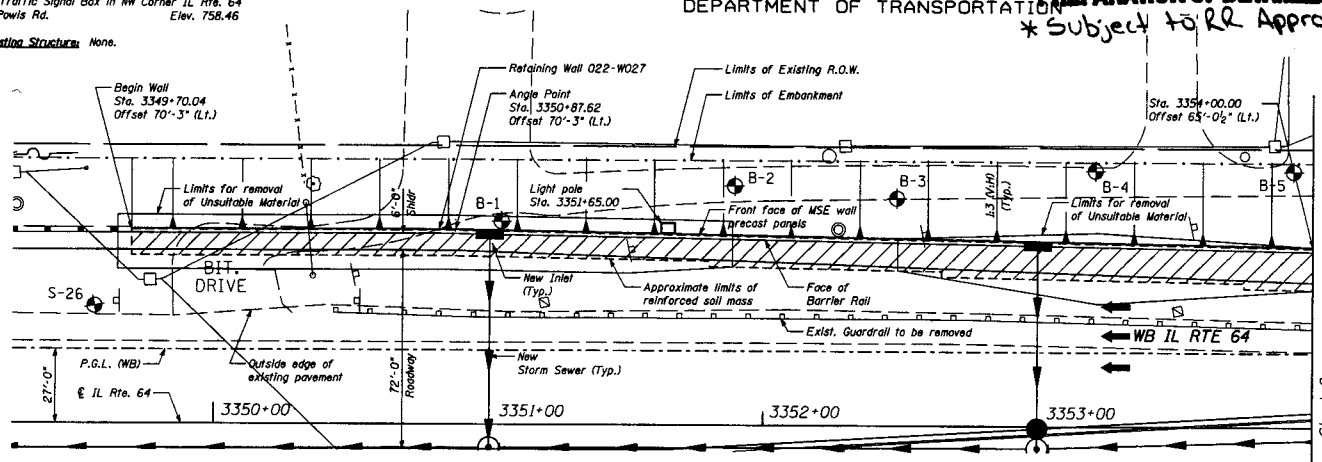

PLAN

See Sheet 2

Match Line Sta. 3354+00

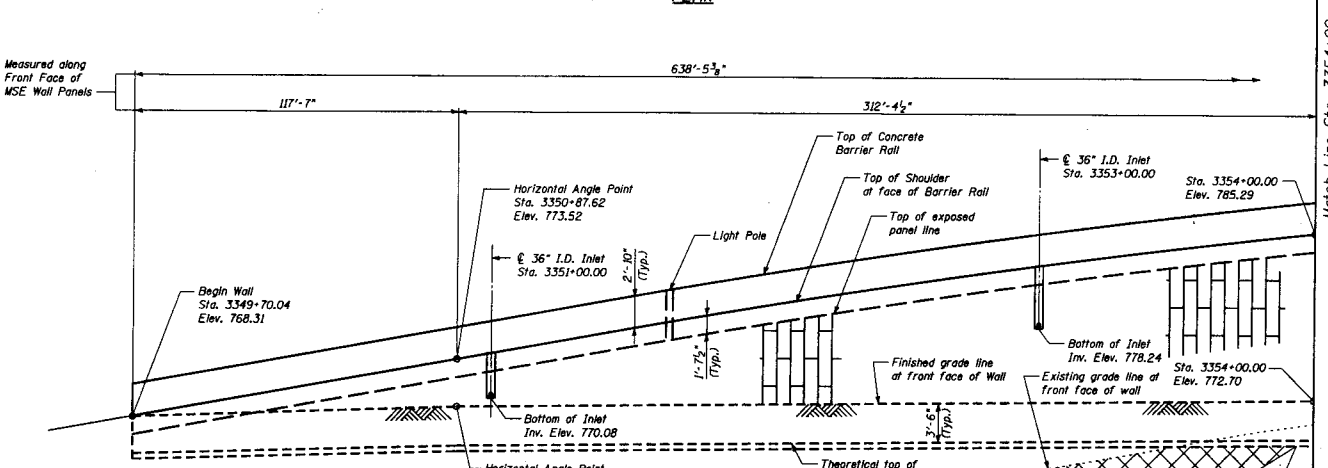

ELEVATION
(Looking North at back face of wall)

DESIGN SPECIFICATIONS

2002 AASHTO

DESIGN STRESSES

FIELD UNITS
f'c = 3,500 psi
fy = 60,000 psi (Reinforcement)

PRECAST UNITS
f'c = 4,500 psi (Precast Face Panels)

HIGHWAY CLASSIFICATION

Class: Principal Arterial
DHV (2020): 1,990
ADT (2000): 30,700
ADT (2020): 45,000
ADTT (2000): 3,684
ADTT (2020): 5,400
Design Speed: 50 mph

NOTES:

Any embankment fill that is placed to support the bearing of the wall shall have a minimum unconfined compressive strength equal to 1.5 TSF or a minimum phi angle of 30°.

Stations and offsets are measured from ℄ IL Rte. 64 to the front face of the MSE wall panels.

Standard symbols, abbreviations and patterns for existing features per Std. 000001-01 through 000001-04.

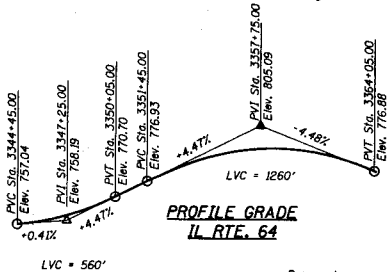

PROFILE GRADE
IL RTE. 64

LEGEND:

- Reinforced Soil Mass
- Removal of Unsuitable Material
- MSE Wall Panels
- B-1 Soil Boring

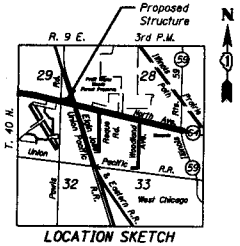

LOCATION SKETCH
Not to Scale

REVISIONS	
NAME	DATE

ILLINOIS DEPARTMENT OF TRANSPORTATION
F.A.P. ROUTE 307 (ILLINOIS ROUTE 64)

GENERAL PLAN
FAP 307 SECTION 130 R-2
DUPAGE COUNTY
STA. 3349+70.04 TO 3356+08.49
RETAINING WALL STRUCTURE NO. 022-W027

SCALE: NONE
DATE: MAY 28, 2004
DRAWN BY: CHD
CHECKED BY: MJP

04/20/2005 01:21:42 PM
M:\P40567\STRUCT\RETWALLTSL\SHT\101W0272.SHT

F.A.P. RTE.	SECTION	COUNTY	TOTAL SHEETS	SHEET NO.
307	130 R-2	DUPAGE,KANE	3	2
STA.		TO STA.		
FED. ROAD DIST. NO.	ILLINOIS	FED. AID PROJECT		

STATE OF ILLINOIS
DEPARTMENT OF TRANSPORTATION

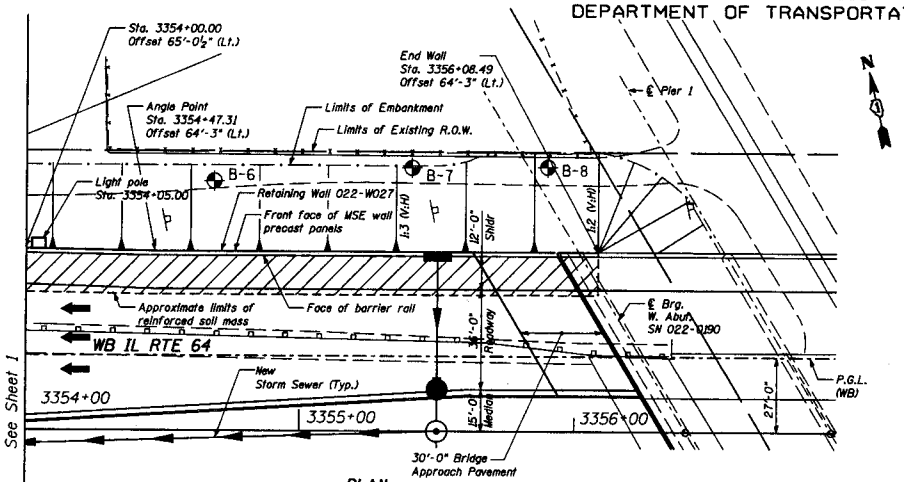

PLAN

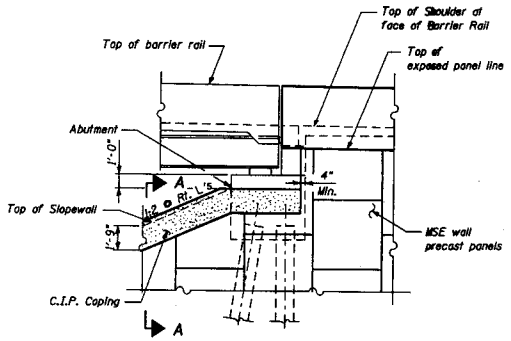

DETAIL 1
(Looking South)

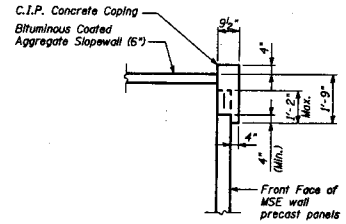

SECTION A-A

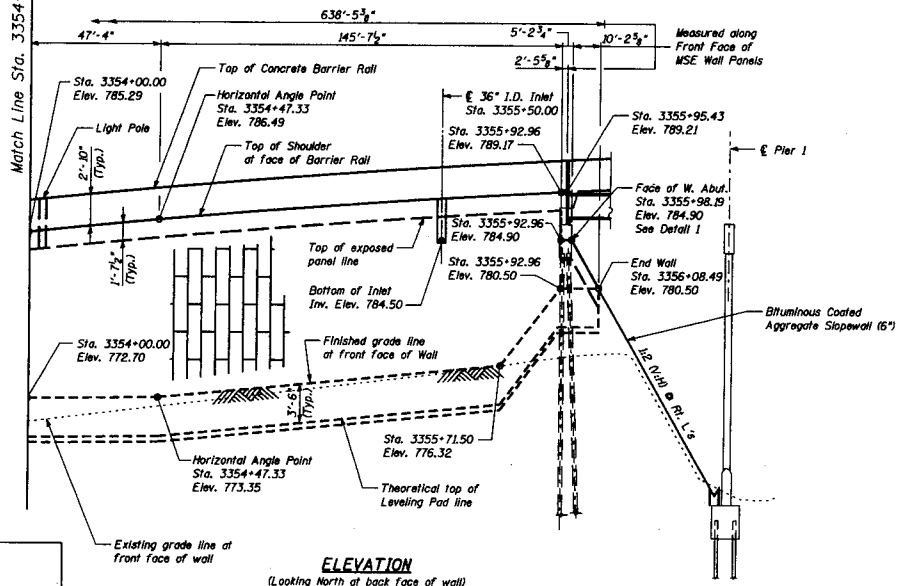

ELEVATION
(Looking North at back face of wall)

Note: The face of abutment station is measured to an offset equal to 63'-9" (The assumed back face of the MSE wall panels)

REVISIONS	
NAME	DATE

ILLINOIS DEPARTMENT OF TRANSPORTATION
F.A.P. ROUTE 307 (ILLINOIS ROUTE 64)

GENERAL PLAN
FAP 307 SECTION 130 R-2
DUPAGE COUNTY
STA. 3349+70.04 TO 3356+08.49
RETAINING WALL STRUCTURE NO. 022-W027

SCALE: NONE
DATE: MAY 28, 2004
DRAWN BY: CHD
CHECKED BY: MJP

04/20/2005 10:08:33 AM
M:\P40567\STRUCT\RETWALLTSL\SHT\101W0273.SHT

STATE OF ILLINOIS
DEPARTMENT OF TRANSPORTATION

F.A.P. RTE.	SECTION	COUNTY	TOTAL SHEETS	SHEET NO.
307	130 R-2	DUPAGE/KANE	3	3
STA.		TO STA.		
FED. ROAD DIST. NO.	ILLINOIS	FED. AID PROJECT		

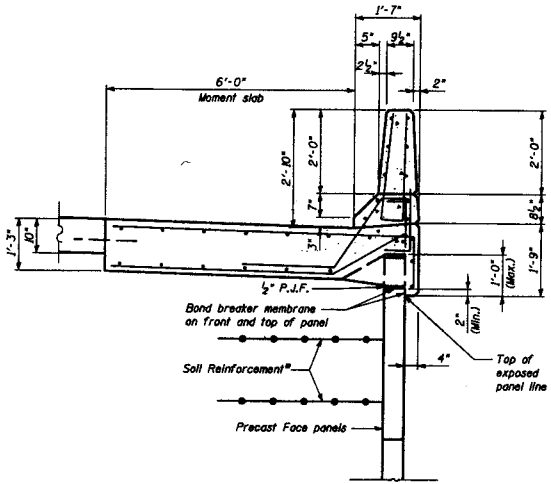

TYPICAL CROSS SECTION

*The M.S.E. wall supplier's internal stability design shall account for the anchorage slab's bearing pressure surcharge of 0.24 ksf and horizontal sliding force of 0.5 kips/ft. of wall.

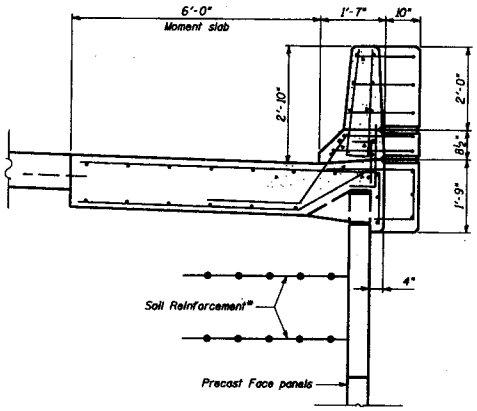

SECTION

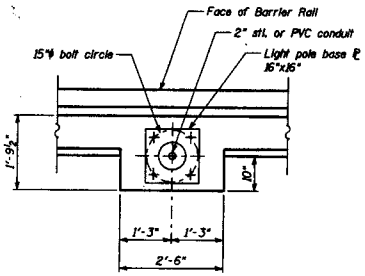

PLAN

LIGHT POLE MOUNTED ON CONCRETE BARRIER RAIL

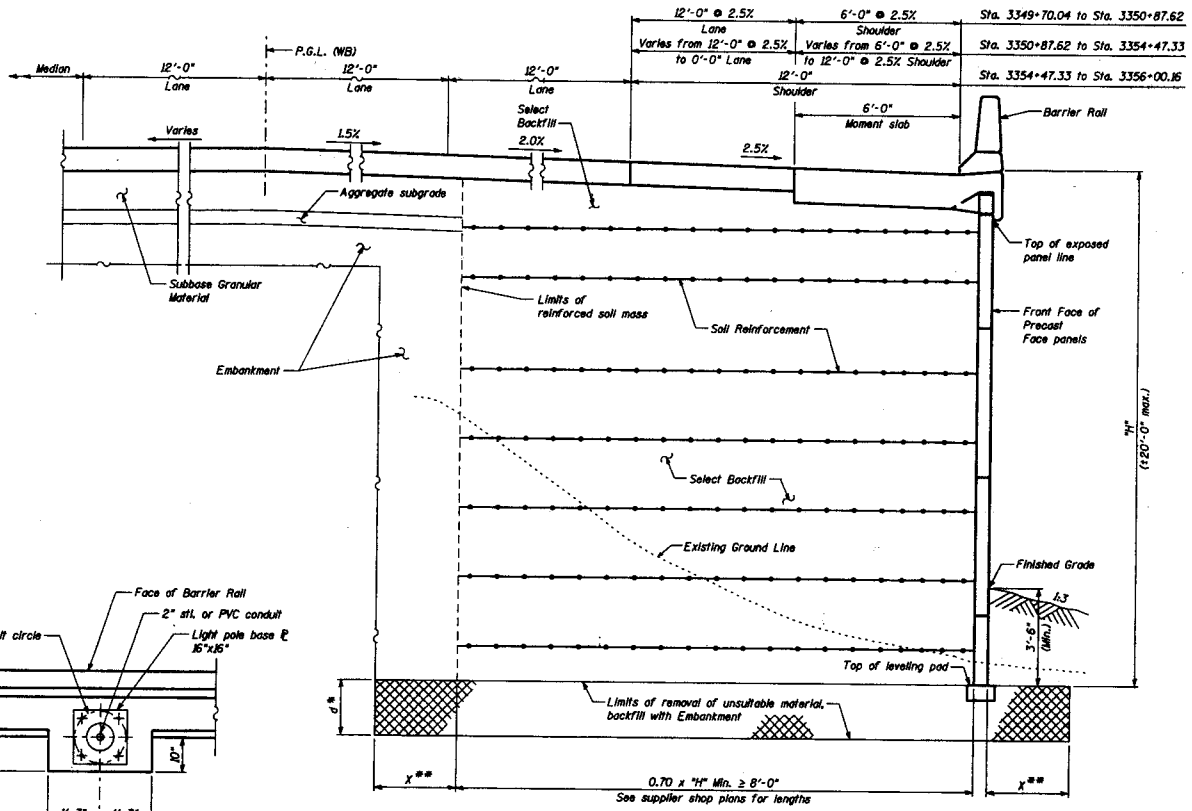

TYPICAL SECTION
(Looking Downstation)

* For Limits of Removal of Unsuitable Material see Sheets 1 and 2

** Edge Distance "X" is the same as the Removal Depth "d"

REVISIONS	
NAME	DATE

ILLINOIS DEPARTMENT OF TRANSPORTATION
F.A.P. ROUTE 307 (ILLINOIS ROUTE 64)

TYPICAL SECTIONS
FAP 307 SECTION 130 R-2
DUPAGE COUNTY
STA. 3349+70.04 TO 3356+08.49
RETAINING WALL STRUCTURE NO. 022-W027

SCALE: NONE
DATE: MAY 28, 2004
DRAWN BY: CHD
CHECKED BY: MJP