Bench Mark: Chiseled "□" on crashwall under 4th. Street overpass on north side of I-57/70. Sta. 2270+67. 67' Lt., Elev. 603.83; Chiseled "□" on sign base of "Chicago, E. Indianapolis." Sta. 2248+93. 0.7' Lt., I-57/70. Elev. 600.99.

Existing Structure: S.N. 025-0049 built in 1960 as F.A.I. Rte. 70, Section 25-4HB-I at Sta. 2270+51.97. The substructure consists of 3-double hammerhead piers on spread footings and pile bent abutments founded on concrete piles. The 4 span superstructure consists of a reinforced concrete deck on wide flange girders. The 2 end spans are simple spans while the 2 interior spans are continuous. The Bk. to Bk. abutments measures 226'-2" while the O.-O. deck width measures 31'-8". The existing structure is to be removed and replaced. Traffic to be detoured.

STATE OF ILLINOIS
DEPARTMENT OF TRANSPORTATION

ROUTE NO.	SECTION	COUNTY	TOTAL SHEETS	SHEET NO.
-	-	-		
FED. ROAD DIST. NO. 7	ILLINOIS	FED. AID PROJECT-		

SHEET NO. 1
1 SHEETS

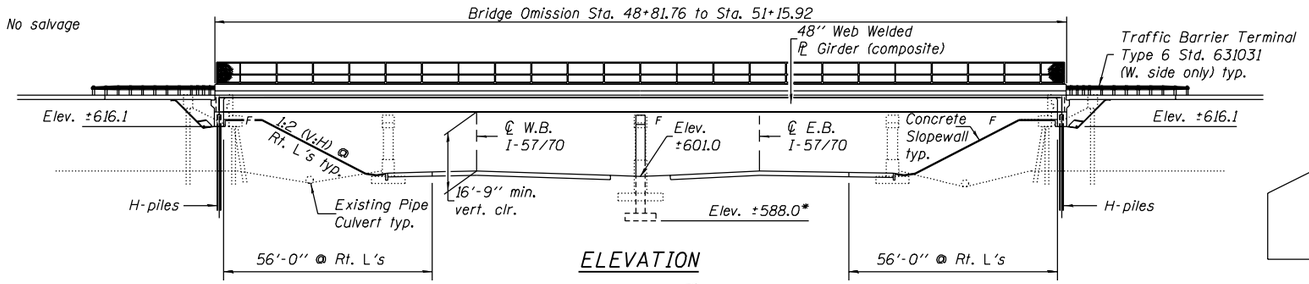

ELEVATION

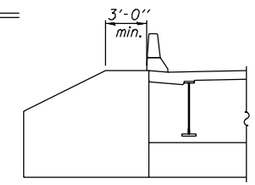

WINGWALL DETAIL

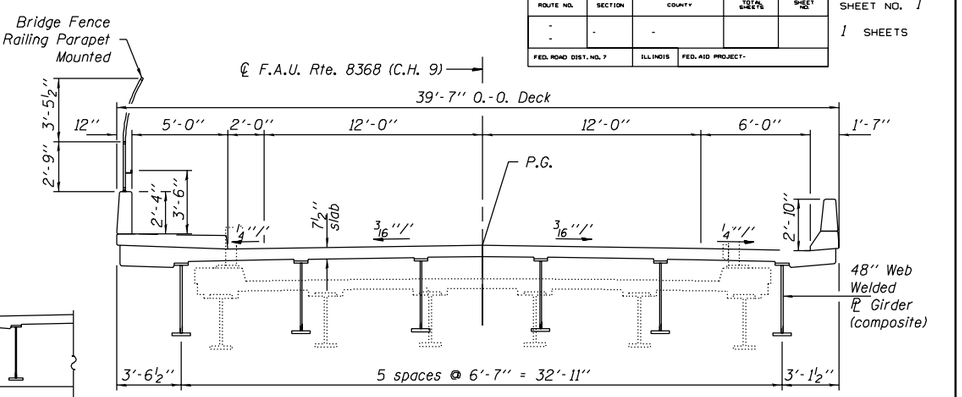

CROSS SECTION
(Looking South)

APPROVED
AS A BASIS FOR
PREPARATION OF DETAILED PLANS
MAY 20 2005

*Factored Bearing Resistance = 10 ksf

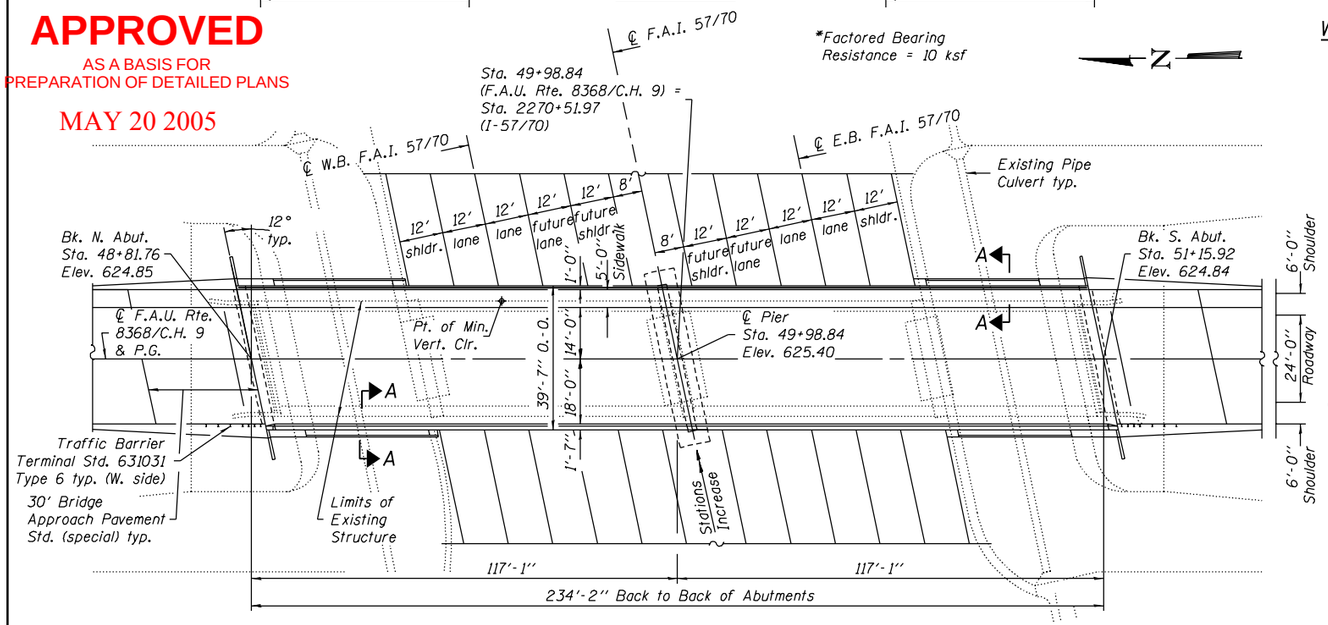

PLAN

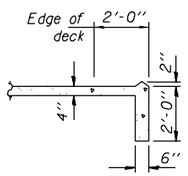

SECTION A-A

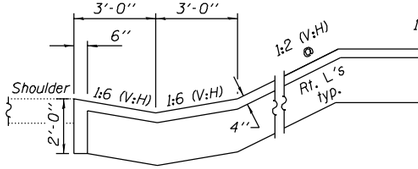

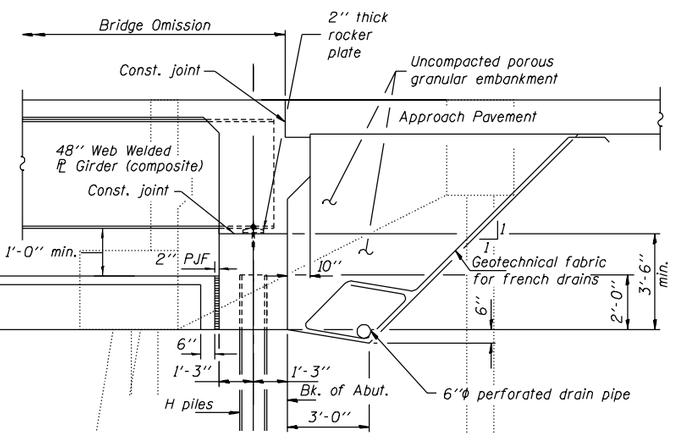

SECTION THRU INTEGRAL ABUTMENT
(Horiz. dim. @ Rt. L's)

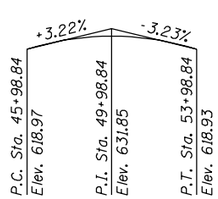

PROFILE GRADE
(along ℄ of C.H. 9)

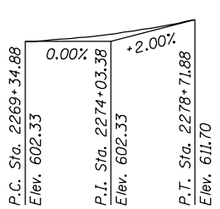

PROFILE GRADE
(Median Edge of Pavement WB I-57/70)

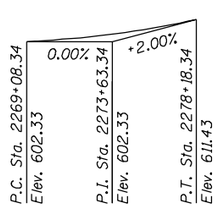

PROFILE GRADE
(Median Edge of Pavement EB I-57/70)

Note: Provide a boardmark concrete texture on the vertical faces of pier stem, pier cap, front face of the abutment caps, and the front face of the wingwalls. Wood grain shall imitate rough sawn cedar. Random board widths: 4" minimum; 12" maximum. Random board lengths: 10 ft. minimum; 20 ft. maximum. Board thicknesses varying from ¼ inch to 1 inch shall be used in a random pattern.

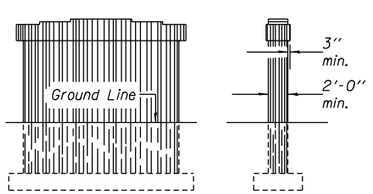

PIER SKETCH

LOADING HL-93
Allow 50#/sq. ft. for future wearing surface.

DESIGN SPECIFICATIONS
AASHTO LRFD Bridge Design Specifications. U.S. 3rd. Edition - 2004

DESIGN STRESSES
FIELD UNITS
f'_c = 3,500 psi
f_y = 60,000 psi (reinforcement)
f_y = 50,000 psi (structural steel) (M270, Grade 50)

SEISMIC DATA
Seismic Performance Zone (SPZ) = 1
Bedrock Acceleration Coefficient (A) = 7.2%g
Site Coefficient (S) = 1.5

HIGHWAY CLASSIFICATION

F.A.U. Rte. 8368/C.H. 9 - 4th. Street Road
Functional Class: Urban Collector
ADT: 2100 (2003); 6692 (2026)
ADTT: 4.2%
Design Speed: 35 m.p.h.
Posted Speed: 30 m.p.h.

F.A.I. Rte. 70 - I-57/70
Functional Class: Interstate
ADT: 33,100 (2002); 62,820 (2026)
ADTT: 39.1%
Design Speed: 70 m.p.h.
Posted Speed: 65 m.p.h.

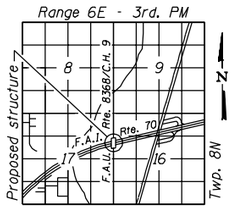

LOCATION SKETCH

GENERAL PLAN
4th. ST. ROAD (F.A.U. RTE. 8368/CH9)
OVER I-57/70
F.A.I. RTE. 70 - SEC. (25-4HB-1)B
EFFINGHAM COUNTY
STATION 49+98.84
STRUCTURE NO. 025-0102

DESIGNED	A.Y. Vinson
CHECKED	J.A. Elston
DRAWN	W.D. Collins
CHECKED	M.K. Christensen

- 200

EXAMINED
ENGINEER OF BRIDGE DESIGN

PASSED
ENGINEER OF BRIDGES AND STRUCTURES