ROUTE NO.	SECTION	COUNTY	TOTAL SHEETS	SHEET NO.
FAP 665	*	FULTON		2 SHEETS
FED. ROAD DIST. NO. 7	ILLINOIS	FED. AID PROJECT-		

* (144-B)BR

Bench Mark: Railroad spike in 1st power pole east of Str. #029-0016, 58' rt. of Sta. 573+04. Elev. 646.49.

Existing Structure: The existing structure, No. 029-0016, was built in 1930 as SBI 97, Section 144-B. The structure is a single span reinforced concrete T girder bridge supported on closed concrete abutments. The bridge is 55'-3½" bk. to bk. of abutments and 50'-0" fa. to fa. of curbs. The contractor shall remove the existing structure as required and replace it with a single span PPC Bulb-T superstructure on semi-integral abutments. The road shall be kept open to one lane of traffic at all times by utilizing stage construction.

No Salvage.

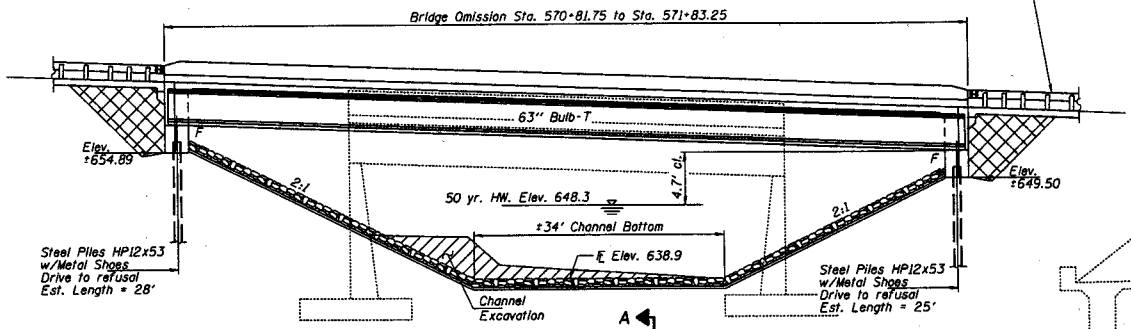

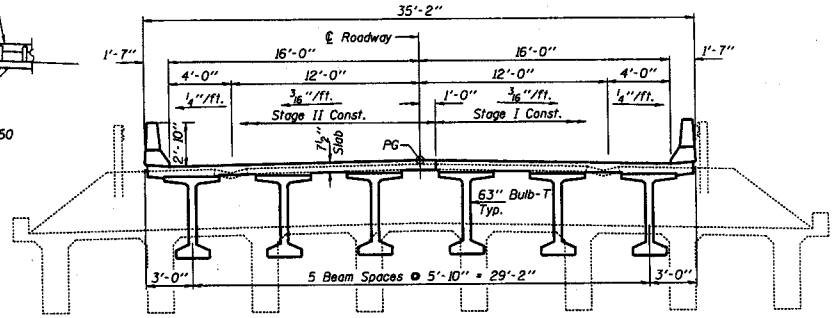

CROSS SECTION
Looking East

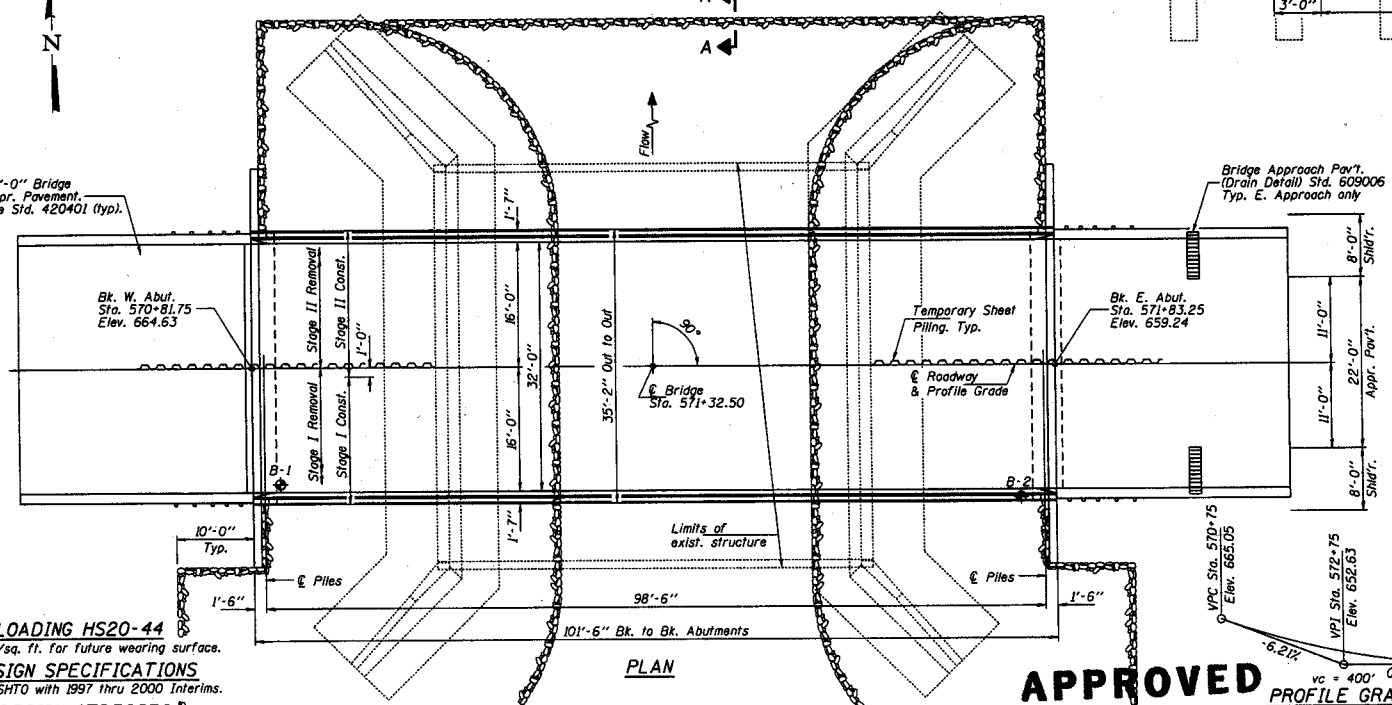

PLAN

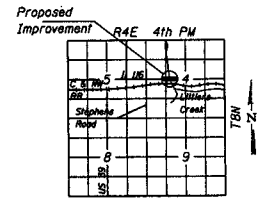

LOCATION SKETCH

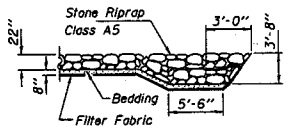

SECTION A-A

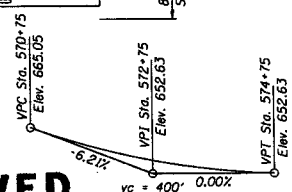

PROFILE GRADE
(Along ℄ Rdwy.)

SEISMIC DATA

Seismic Performance Category (SPC) = A
Bedrock Acceleration Coefficient (A) = .04g
Site Coefficient (S) = 1.0

HIGHWAY CLASSIFICATION

FAP Rte. 665 - IL Rte. 116
Functional Class: Minor Arterial (Rural)
ADT: 2400 (2000); 2960 (2021)
DHV: 240 (2000)
Design Speed: 55 m.p.h.
Posted Speed: 55 m.p.h.

LOADING HS20-44

Allow 50#/sq. ft. for future wearing surface.

DESIGN SPECIFICATIONS

1996 AASHTO with 1997 thru 2000 Interims.

DESIGN STRESSES

FIELD UNITS
f'c = 3,500 psi
fy = 60,000 psi (reinforcement)

PRECAST PRESTRESSED UNITS
f'c = 6,000 psi
f'ci = 5,000 psi
f's = 270,000 psi (½"ϕ low lax. strands)
fsi = 201,960 psi (½"ϕ low lax. strands)

WATERWAY INFORMATION

Drainage Area = 13.9 Sq. Mi. Low Grade Elev. 652.3 @ Sta. 576+00

Flood	Freq. Yr.	Q C.F.S.	Opening Sq. Ft. Exist.	Opening Sq. Ft. Prop.	Nat. H.W.E.	Head-Ft. Exist.	Head-Ft. Prop.	Headwater El. Exist.	Headwater El. Prop.
Design	50	3410	364	493	648.3	1.8	0.7	650.1	649.0
Base	100	3970	382	518	648.6	2.3	1.0	650.9	649.6
Overtopping	433	5120	414	x	649.1	3.2	x	652.3	x
Max. Calc.	500	5350	419	573	649.3	3.4	1.7	652.7	651.0

APPROVED AS A BASIS FOR PREPARATION OF DETAILED PLANS

JAN 15 2002

DESIGNED: DAB | CHECKED: ZBU | DRAWN: bolivo

GENERAL PLAN AND ELEVATION
FAP ROUTE 665 (IL. 116) OVER
LITTLERS CREEK
SECTION (144-B)BR
FULTON COUNTY
STR. NO. 029-0066 STATION 571+32.50

ROUTE NO.	SECTION	COUNTY	TOTAL SHEETS	SHEET NO.
FAP 665	*	FULTON		
PROJ. NONE (DIST. NO. ?)		D.L.NUMBER	PROJ. NO. PROJECT-	

* (144-B)BR

SHEET NO. 2
2 SHEETS

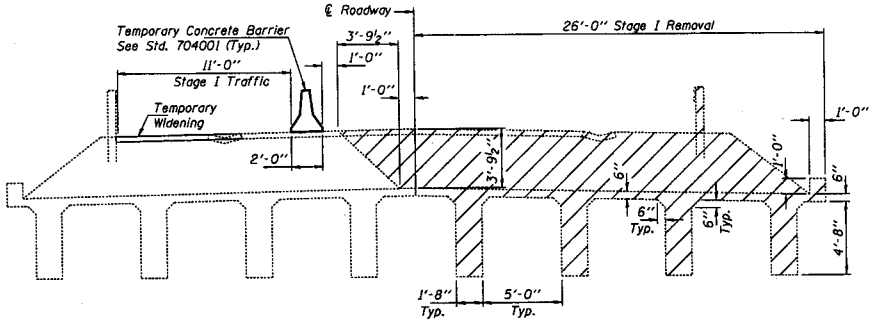

STAGE I REMOVAL

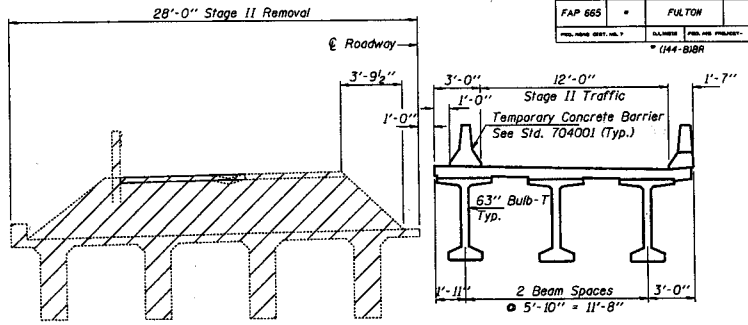

STAGE II REMOVAL

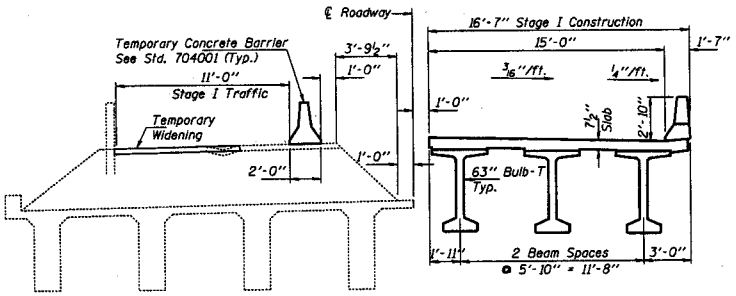

STAGE I CONSTRUCTION

Note: All sections are looking east.
Hatched areas indicate removal.

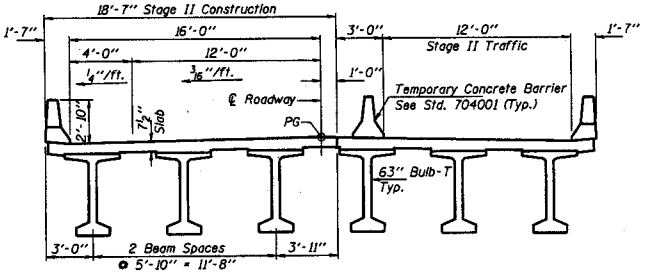

STAGE II CONSTRUCTION

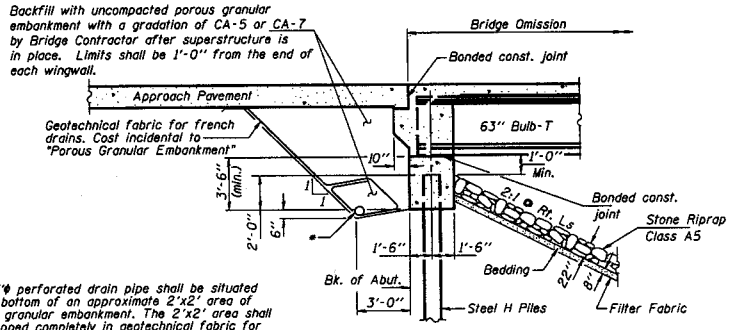

* A 6"φ perforated drain pipe shall be situated at the bottom of an approximate 2'x2' area of porous granular embankment. The 2'x2' area shall be wrapped completely in geotechnical fabric for french drains. Extend pipe parallel with the cap until intersecting with the sideslope and slopewall. Cost incidental to "Porous Granular Embankment"

SECTION THRU ABUTMENTS

DESIGNED: DAB | CHECKED: ZBU | DRAWN: ballvg

STAGING
FAP ROUTE 665 (IL. 116) OVER
LITTLERS CREEK
SECTION (144-B)BR
FULTON COUNTY
STR. NO. 029-0066 STATION 571+32.50