ROUTE NO.	SECTION	COUNTY	TOTAL SHEETS	SHEET NO.
346		LAKE		1
FED. ROAD DIST. NO.		ILL. PROJ.	FED. AID PROJECT	5 - SHEETS

STATE OF ILLINOIS
DEPARTMENT OF TRANSPORTATION

APPROVED
JAN 10 2006
AS A BASIS FOR PREPARATION OF DETAILED PLANS

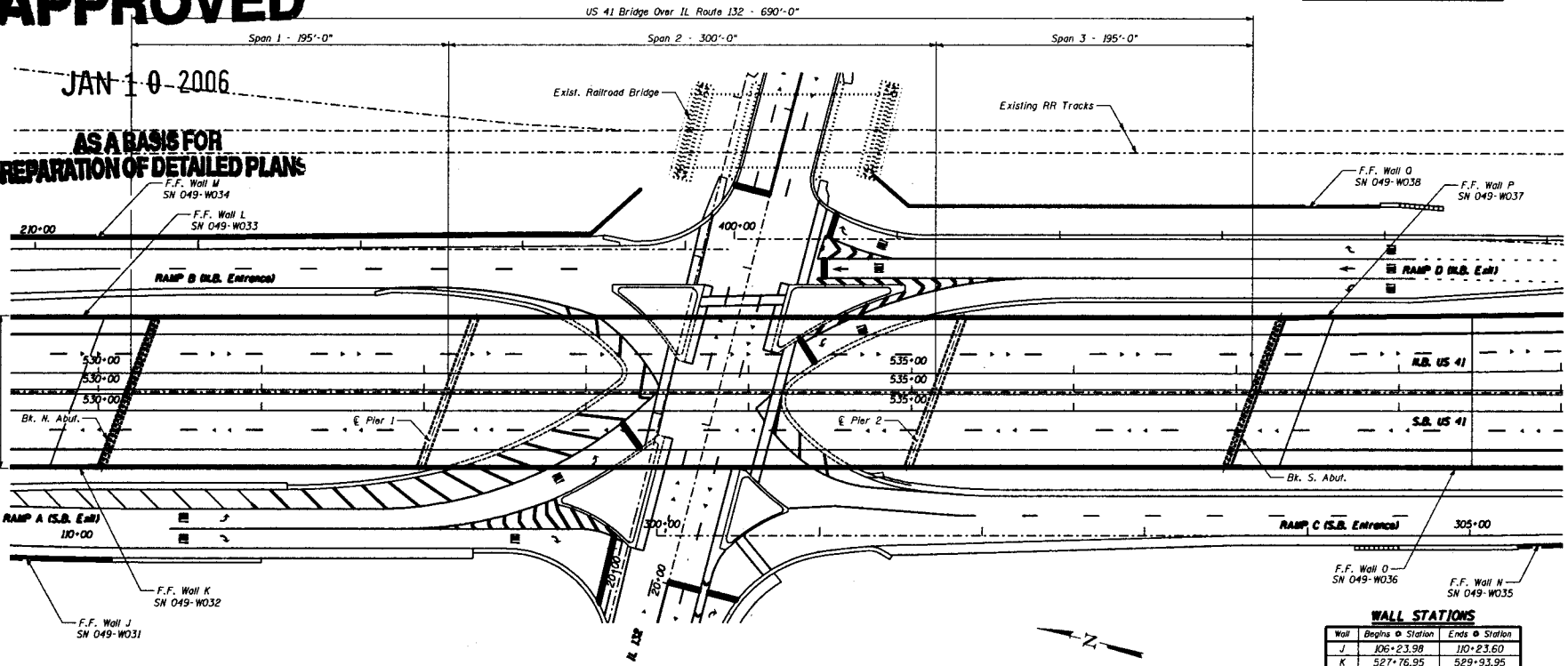

OVERALL PLAN
(Interim Build-out)

WALL STATIONS

Wall	Begins ⊕ Station	Ends ⊕ Station
J	106+23.98	110+23.60
K	527+76.95	529+93.95
L	527+91.28	530+28.28
M	209+34.09	213+73.11
N	305+29.91	312+64.94
O	537+03.57	540+88.57
P	537+38.07	539+54.74
Q	400+84.81	403+97.09

CONSTRUCTION STAGING

Stage 1 - Divert traffic to existing N.B. bridge. Close existing S.B. bridge and existing entrance and exit ramps. Remove existing S.B. bridge. Construct portion of new bridge and retaining walls J, K, N, and O.

Stage 2 - Divert traffic to constructed portion of new bridge. Close and remove existing N.B. bridge. Construct remaining portion of new bridge and retaining walls L, M, O, and P.

DESIGN SPECIFICATIONS

2002 AASHTO Standard Specifications For Highway Bridges

LOADING HS20-44

Allow 50 psf for future wearing surface

DESIGN STRESSES

FIELD UNITS

f'_c = 3,500 psi
f_y = 60,000 psi (reinforcement)
f_y = 50,000 psi (structural steel M270 Grade 50)

SEISMIC DATA

Seismic Performance Category (SPC) = A
Bedrock Acceleration Coefficient (A) = 0.035g
Site Coefficient (S) = 1.0

HIGHWAY CLASSIFICATION

FAP 346 (US Rt. 41 - Skokie Highway)

Functional Class: Major Highway Extension
ADT: 48,552 (2000), 57,000 (2020)
DHV: 4,005 (2020)
ADTT: 9,710 (2000), 11,400 (2020)
Design Speed: 60 mph
Posted Speed: 45 mph

IL Rt. 132

Functional Class: Principal Arterial
ADT: 28,214 (2000), 32,000 (2020)
DHV: 2,330 (2020)
ADTT: 1,693 (2000), 1,920 (2020)
Design Speed: 40 mph
Posted Speed: 35 mph

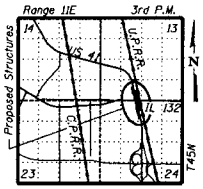

LOCATION SKETCH

DESIGNED	CM
CHECKED	AD
DRAWN	CM
CHECKED	AD

20

EXAMINED
ENGINEER OF BRIDGE DESIGN

PASSED
ENGINEER OF BRIDGES AND STRUCTURES

OVERALL GENERAL PLAN

FAP 346 (U.S. ROUTE 41 - SKOKIE HIGHWAY) OVER ILLINOIS ROUTE 132
SECTION 125X-HB-(1&2)R-1
LAKE COUNTY
S.N. 049-0209

ROUTE NO.	SECTION	COUNTY	CONTR. NO.	"PE"	SHEET NO. - 2
346		LAKE			5 - SHEETS
FED. ROAD DIST. NO.		ILLINOIS	FED. AID PROJECT -		

STATE OF ILLINOIS
DEPARTMENT OF TRANSPORTATION

Benchmark: BM #6 - Square cut in base of L.P. at N.E. corner of IL Route 132 and Magnolia (Speedway) 45.14' LT, Sta. 32+13.24 (IL 132 E.B. ℄), Elev. 696.47.

Existing Structure: Each existing superstructure consists of a 208'-5¼" (Bk. to Bk. abutments) by 41'-6" wide reinforced concrete deck supported on six continuous wide flange beams. The superstructure rests on two piers and two closed abutments, all of reinforced concrete, and founded on timber piles. Existing structure numbers are 049-0030 & 049-0031. See staging plan for staging details.

Salvage: None

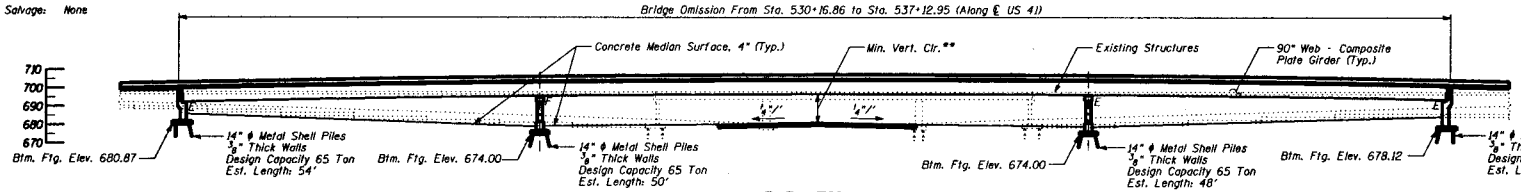

ELEVATION

(Elevation View Shown at ℄ US 41)

**15'-3" Future buildout
15'-8" Interim buildout

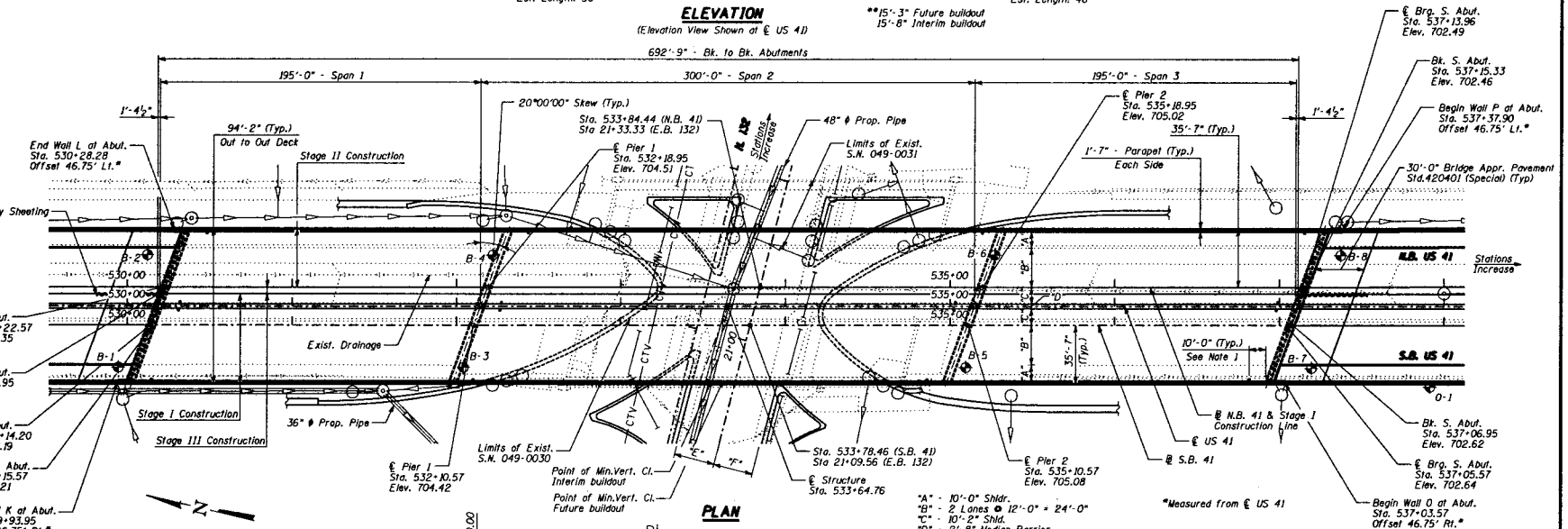

PLAN

*Measured from ℄ US 41

"A" - 10'-0" Shldr.
"B" - 2 Lanes @ 12'-0" = 24'-0"
"C" - 10'-2" Shld.
"D" - 2'-8" Median Barrier
"E" - 2 W.B. Lanes @ 12'-0" = 24'-0"
"F" - 2 E.B. Lanes @ 12'-0" = 24'-0"

LEGEND

- Manhole
- Prop. Drain Pipe
- Catch Basin
- Drainage Scupper - Type DS-11
- Soil Boring

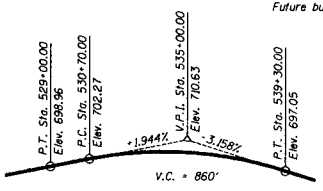

PROFILE US 41 N.B. & S.B.

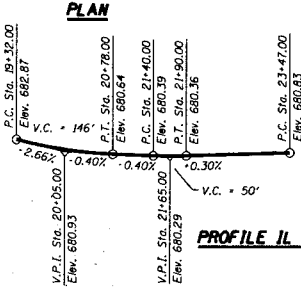

PROFILE IL 132 E.B.

NOTES:

1. Scuppers are placed 10'-0" from the face of piers and abutments.

DESIGNED	-	CW
CHECKED	-	AD
DRAWN	-	CW
CHECKED	-	AD

EXAMINED _____ ENGINEER OF BRIDGE DESIGN

PASSED _____ ENGINEER OF BRIDGES AND STRUCTURES

BRIDGE GENERAL PLAN STA 533+64.76

FAP 346 (U.S. ROUTE 41 - SKOKIE HIGHWAY) OVER ILLINOIS ROUTE 132
SECTION 125X-HB-(1&2)R-1
LAKE COUNTY
S.N. 049-0209

STATE OF ILLINOIS
DEPARTMENT OF TRANSPORTATION

ROUTE NO.	SECTION	COUNTY	JOB NO.	"B"
346		LAKE		
FED. ROAD DIST. NO.		ILLINOIS	FED. AID PROJECT-	

SHEET NO. - 3
9 - SHEETS

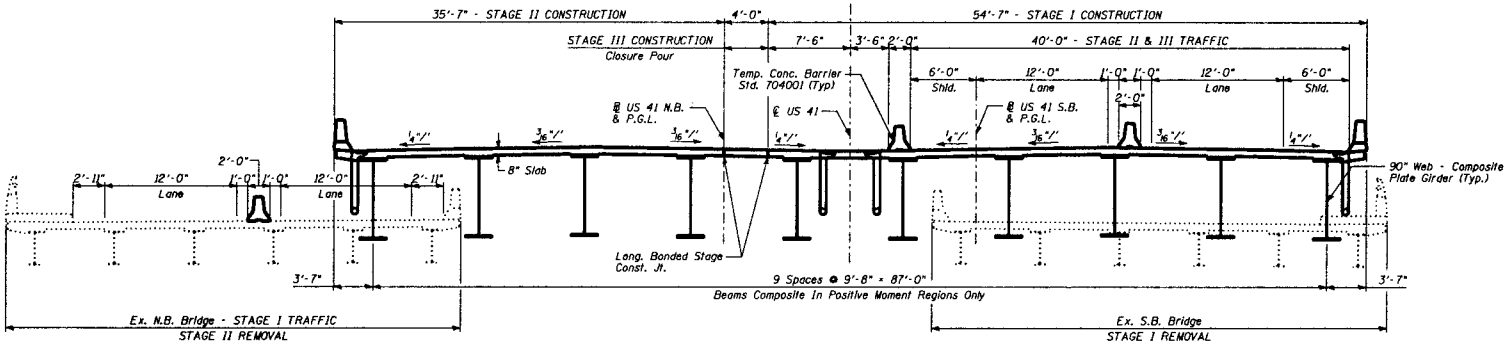

STAGES I, II, & III CONSTRUCTION

(Looking South)

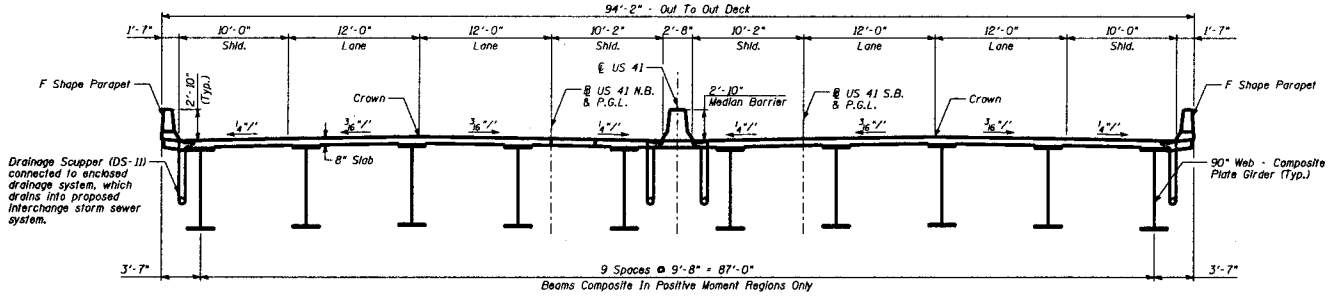

TYPICAL SECTION (FINAL)

(Looking South)

DESIGNED -	CM
CHECKED -	AD
DRAWN -	CM
CHECKED -	AD

- 20

ENGINEER OF BRIDGE DESIGN

ENGINEER OF BRIDGES AND STRUCTURES

BRIDGE
STAGE CONSTRUCTION

FAP 346 (U.S. ROUTE 41 - SKOKIE HIGHWAY) OVER ILLINOIS ROUTE 132
SECTION 125X-HB-(1&2)R-1
LAKE COUNTY
S.N. 049-0209

STATE OF ILLINOIS
DEPARTMENT OF TRANSPORTATION

ROUTE NO.	SECTION	COUNTY	JOB NO.	"R"
346		LAKE		
FED. ROAD DIST. NO.		ILLINOIS	FED. AID PROJECT-	

SHEET NO. - 4
6 - SHEETS

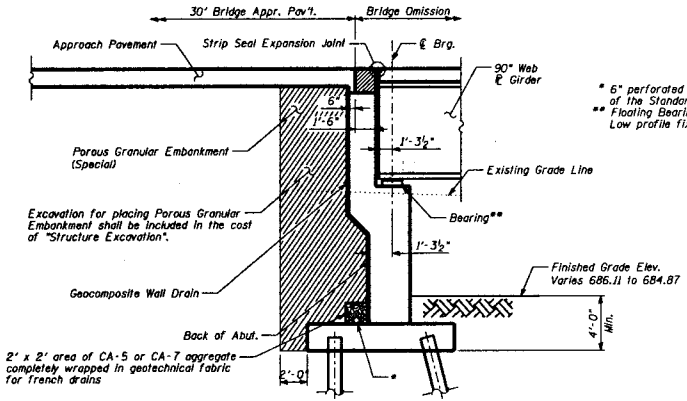

SECTION THRU NORTH ABUTMENT
(Horiz. dimensions @ Rt. L's)

* 6" perforated pipe drain according to Section 601 of the Standard Specifications.
** Floating Bearing (Guided Expansion) at Abutments and Pier 2. Low profile fixed bearing at Pier 1.

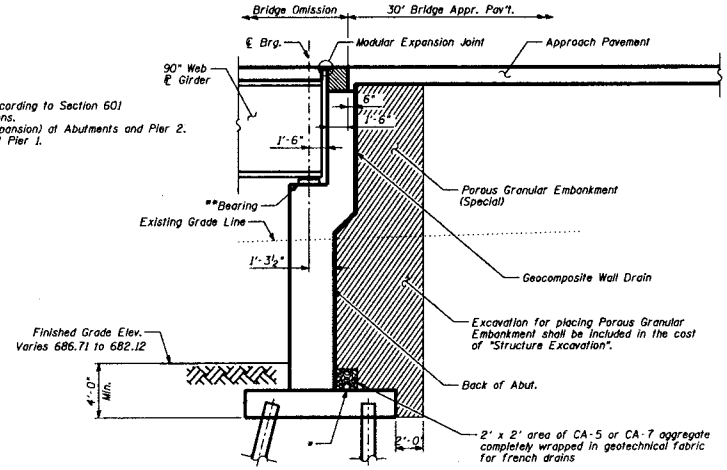

SECTION THRU SOUTH ABUTMENT
(Horiz. dimensions @ Rt. L's)

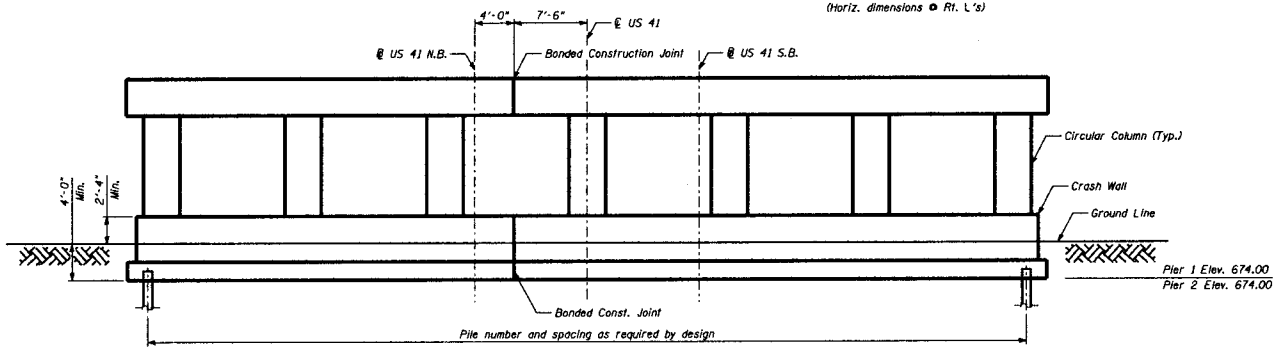

PIER SKETCH
(Looking South)

DESIGNED - CM	
CHECKED - AD	
DRAWN - CM	
CHECKED - PF	

\- 20
ENGINEER OF BRIDGE DESIGN
ENGINEER OF BRIDGES AND STRUCTURES

BRIDGE DETAILS

FAP 346 (U.S. ROUTE 41 - SKOKIE HIGHWAY) OVER ILLINOIS ROUTE 132
SECTION 125X-HB-(1&2)R-1
LAKE COUNTY
S.N. 049-0209

STATE OF ILLINOIS
DEPARTMENT OF TRANSPORTATION

ROUTE NO.	SECTION	COUNTY	TOTAL SHEETS	SHEET NO.
346		LAKE		5
FED. ROAD DIST. NO.	ILLINOIS	FED. AID PROJECT		

SHEET NO. - 5
5 - SHEETS

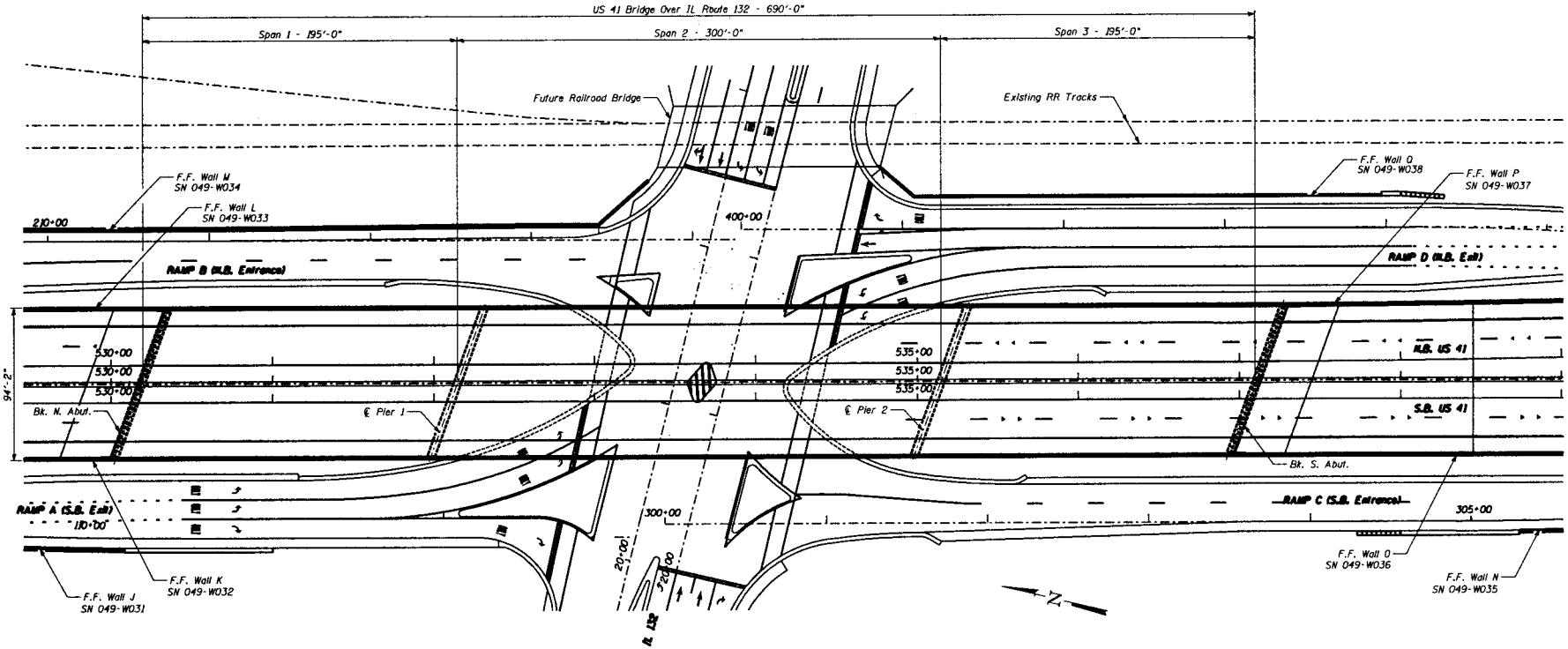

OVERALL PLAN

(Future Build-out)

NOTES:

1. Future build-out to accommodate two right turn lanes from Ramp D (N.B. exit) on to E.B. IL 132, and two right turn lanes from W.B. IL 132 on to Ramp B (N.B. entrance).
2. Existing railroad bridge will be removed and replaced to accommodate additional lanes on IL 132 for future build-out.

WALL STATIONS

Wall	Begins @ Station	Ends @ Station
J	106+23.98	110+23.60
K	527+76.95	529+93.95
L	527+91.28	530+28.28
M	209+34.09	213+73.11
N	305+29.91	312+64.94
O	537+03.57	540+88.57
P	537+38.07	539+54.74
Q	400+84.81	403+97.09

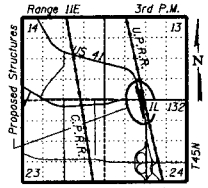

LOCATION SKETCH

DESIGNED	-	CM
CHECKED	-	AD
DRAWN	-	CM
CHECKED	-	AD

- 20

CHECKED
ENGINEER OF BRIDGE DESIGN

PASSED
ENGINEER OF BRIDGES AND STRUCTURES

OVERALL FUTURE PLAN

FAP 346 (U.S. ROUTE 41 - SKOKIE HIGHWAY) OVER ILLINOIS ROUTE 132
SECTION 125X-HB-(1&2)R-1
LAKE COUNTY
S.N. 049-0209