Bench Mark: Southwest corner of West Abutment on wingwall. Elevation 501.30

Existing Structure: S.N. 050-0094, built in 1966 as S.B.I. Route 7 (F.A.S. Rte. 260), Section X-1BR. The existing structure consists of a three span continuous plate girder with reinforced concrete deck. 292'-0" back-to-back abutments. 36'-0" out to out deck. The deck is to be removed and replaced, one girder line added and the substructure widened using stage construction.

No salvage

STATE OF ILLINOIS
DEPARTMENT OF TRANSPORTATION

ROUTE NO.	SECTION	COUNTY	TOTAL SHEETS	SHEET NO.
-	-	-		
FED. ROAD DIST. NO. 7		ILLINOIS	FED. AID PROJECT-	

SHEET NO. 1
2 SHEETS

Contract #

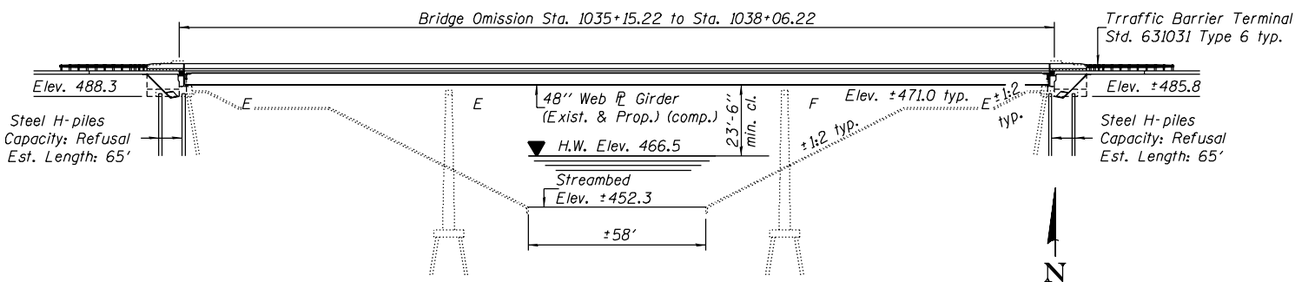

ELEVATION

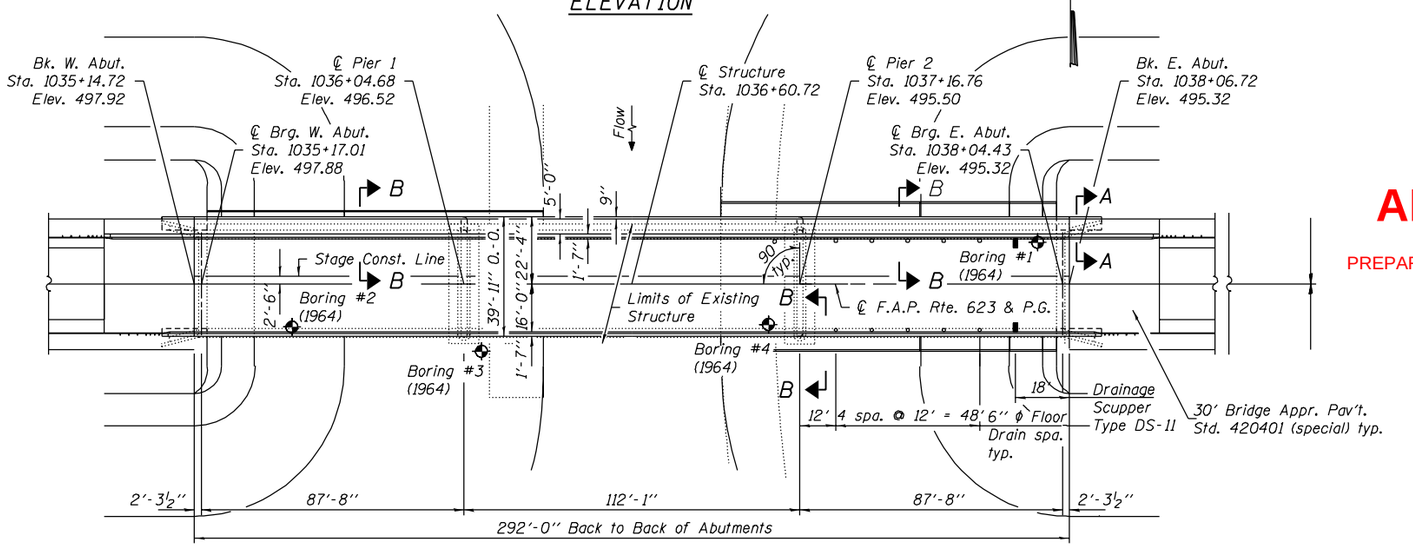

PLAN

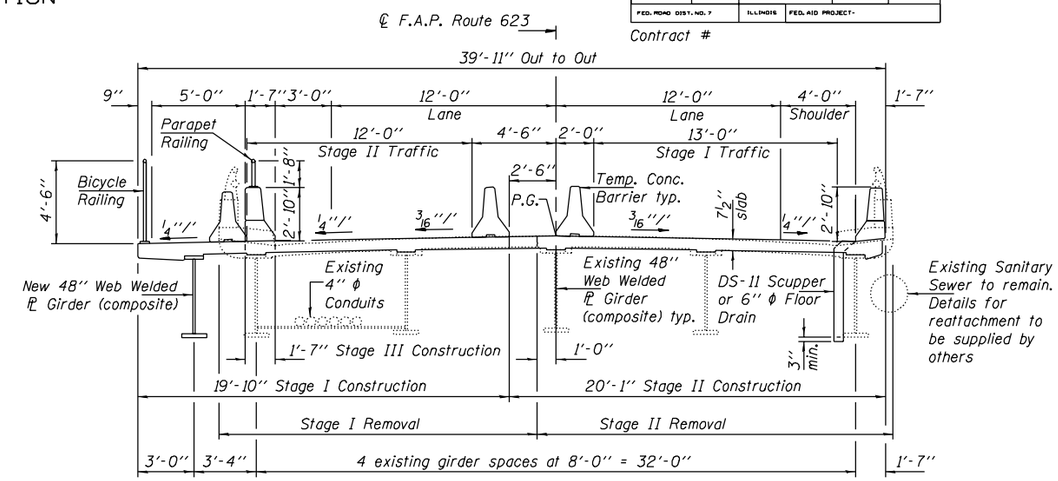

CROSS SECTION
(Looking East)

APPROVED
AS A BASIS FOR PREPARATION OF DETAILED PLANS
JUL 12 2005

SCOPE OF WORK

1. Remove and replace deck. Add new girder on North side of bridge.
2. Make all girders composite in positive moment regions.
3. Remove and replace abutment cross frames.
4. Replace existing abutment bearings with elastomeric bearings.
5. Clean and paint structural steel.
6. Widen abutments & piers.
7. Remove and replace abutment backwalls and wingwalls.
8. Repair substructure as necessary.
9. Repair area of erosion at the southwest nose of the east pier. Fill w/CLSM or suitable grout mixture.

Note: No in-stream work will be allowed due to environmental constraints.

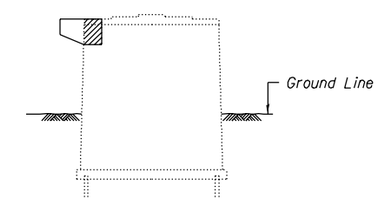

PIER SKETCH
(Looking East)

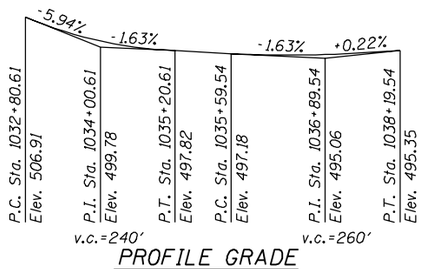

PROFILE GRADE
(along ℄ roadway)

HIGHWAY CLASSIFICATION

F.A.P. Rte. 623 - U.S. Rte. 6
Functional Class: Other Principal Arterial
ADT: 9,600 (1999); 15,400 (2019) DHV: 1540 (2019)
ADTT: 11.5%
Design Speed: 40 m.p.h.
Posted Speed: 40 m.p.h.

LOADING HS20-44

Allow 50#/sq. ft. for future wearing surface.

WATERWAY INFORMATION

Drainage Area = 126 Sq. Mi. Low Grade Elev. 495.38' @ Sta. 10+90

Flood	Freq. Yr.	Q C.F.S.	Opening Sq. Ft. Exist.	Opening Sq. Ft. Prop.	Nat. H.W.E.	Head - Ft. Exist.	Head - Ft. Prop.	Headwater El. Exist.	Headwater El. Prop.
	10	6579	918	918	464.7	0.7	0.7	465.4	465.4
Design	50	9739	1125	1125	466.5	1.1	1.1	467.6	467.6
Base	100	11043	1203	1203	467.1	1.2	1.2	468.3	468.3
Overtopping	-	-	-	-	-	-	-	-	-
Max. Calc.	500	14095	1364	1364	468.4	1.5	1.5	469.9	469.9

DESIGN SPECIFICATIONS

2002 AASHTO

DESIGN STRESSES

FIELD UNITS

New Construction

f'_c = 3,500 psi
f_y = 60,000 psi (reinforcement)
f_y = 36,000 psi (M270 Grade 36 structural steel)

Existing Construction

f'_c = 3,500 psi
f_y = 40,000 psi (reinforcement)
f_y = 36,000 psi (structural steel)

SEISMIC DATA

Seismic Performance Category (SPC) = A
Bedrock Acceleration Coefficient (A) = 3.8%g
Site Coefficient (S) = 1.0

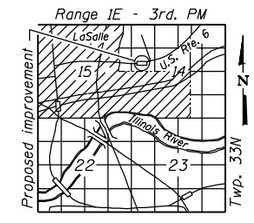

LOCATION SKETCH

GENERAL PLAN
U.S. ROUTE 6 OVER
LITTLE VERMILION RIVER
F.A.P. ROUTE 623 - SECTION X-1BR
LaSALLE COUNTY
STATION 1036+60.72
STRUCTURE NO. 050-0094

DESIGNED - G.G. Eicher	
CHECKED - J.W. Mann	
DRAWN - W.D. Collins	
CHECKED - T.A. Craven	

EXAMINED - 200
ENGINEER OF BRIDGE DESIGN
PASSED
ENGINEER OF BRIDGES AND STRUCTURES

STATE OF ILLINOIS
DEPARTMENT OF TRANSPORTATION

ROUTE NO.	SECTION	COUNTY	TOTAL SHEETS	SHEET NO.
-	-	-		
FED. ROAD DIST. NO. 7		ILLINOIS	FED. AID PROJECT-	

SHEET NO. 2
2 SHEETS
Contract #

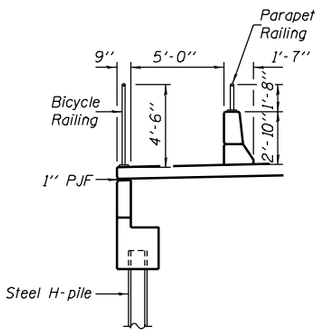

SECTION A-A

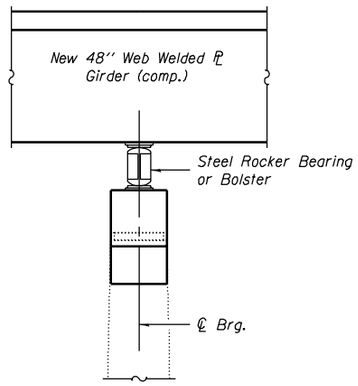

SECTION THRU PIER EXTENSION

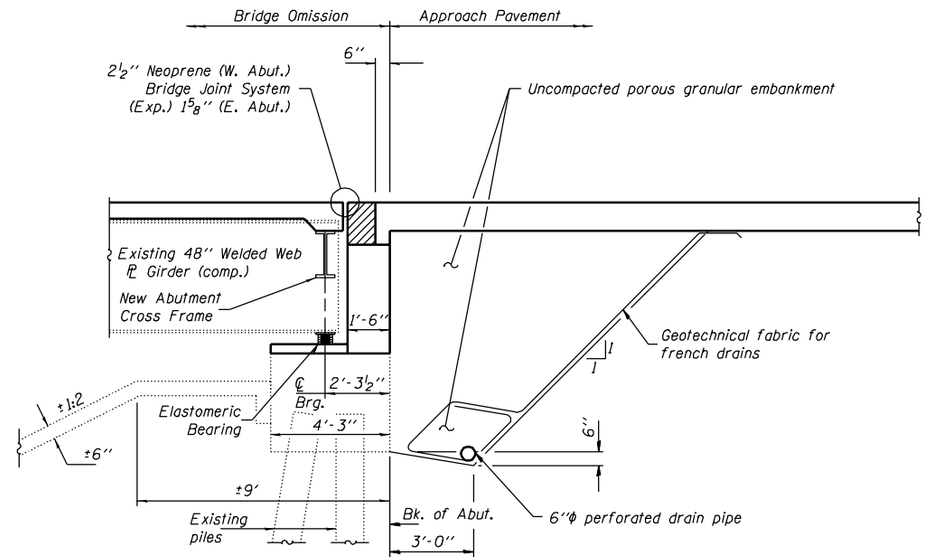

SECTION THRU EXISTING ABUTMENT
(Horiz. dim. @ Rt. L's)

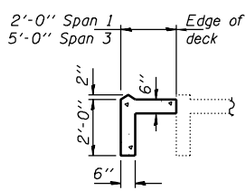

SECTION B-B

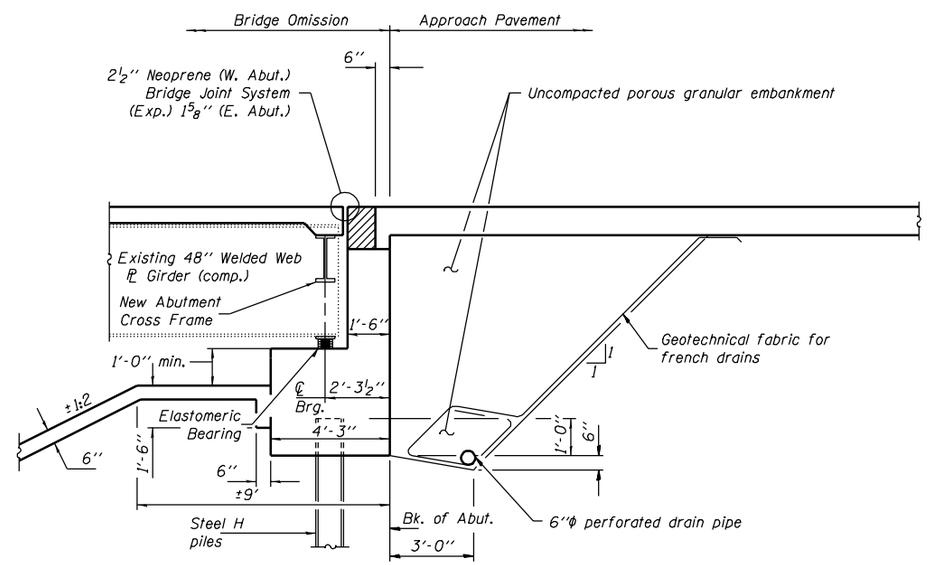

SECTION THRU ABUTMENT EXTENSION
(Horiz. dim. @ Rt. L's)

DESIGNED	G.G. Eicher
CHECKED	J.W. Mann
DRAWN	W.D. Collins
CHECKED	T.A. Craven

- 200

EXAMINED
ENGINEER OF BRIDGE DESIGN

PASSED
ENGINEER OF BRIDGES AND STRUCTURES

DETAILS
U.S. ROUTE 6 OVER
LITTLE VERMILION RIVER
F.A.P. ROUTE 623 - SECTION X-1BR
LaSALLE COUNTY
STATION 1036+60.72
STRUCTURE NO. 050-0094