Bench Mark: IDOT BM#20A Chsld. "□" on SW corner of hub guard. S.N. 059-0008 Sta. 447+50. offset = 15.2' RT. NGVD 29. Elev. 602.96

Existing Structure: S.N. 059-0008 built in 1961 as SBI Rte. 4. Section (V,T) B-1 at Sta. 447+03.8. The superstructure consists of a reinforced concrete deck on wide flange beams. The substructure consists of pile bent abutments and 2 single hammerhead piers supported on spread footings. The Bk. to Bk. Abut. dimension measures 108'-0'' while the O.-O. deck width measures 33'-8''. The structure is to be removed and replaced using stage construction.

No salvage

STATE OF ILLINOIS
DEPARTMENT OF TRANSPORTATION

APPROVED
AS A BASIS FOR
PREPARATION OF DETAILED PLANS
FEB 21 2006

ROUTE NO.	SECTION	COUNTY	TOTAL SHEETS	SHEET NO.
-	-	-		
FED. ROAD DIST. NO. 7		ILLINOIS	FED. AID PROJECT-	

SHEET NO. 1
1 SHEETS
Contract #

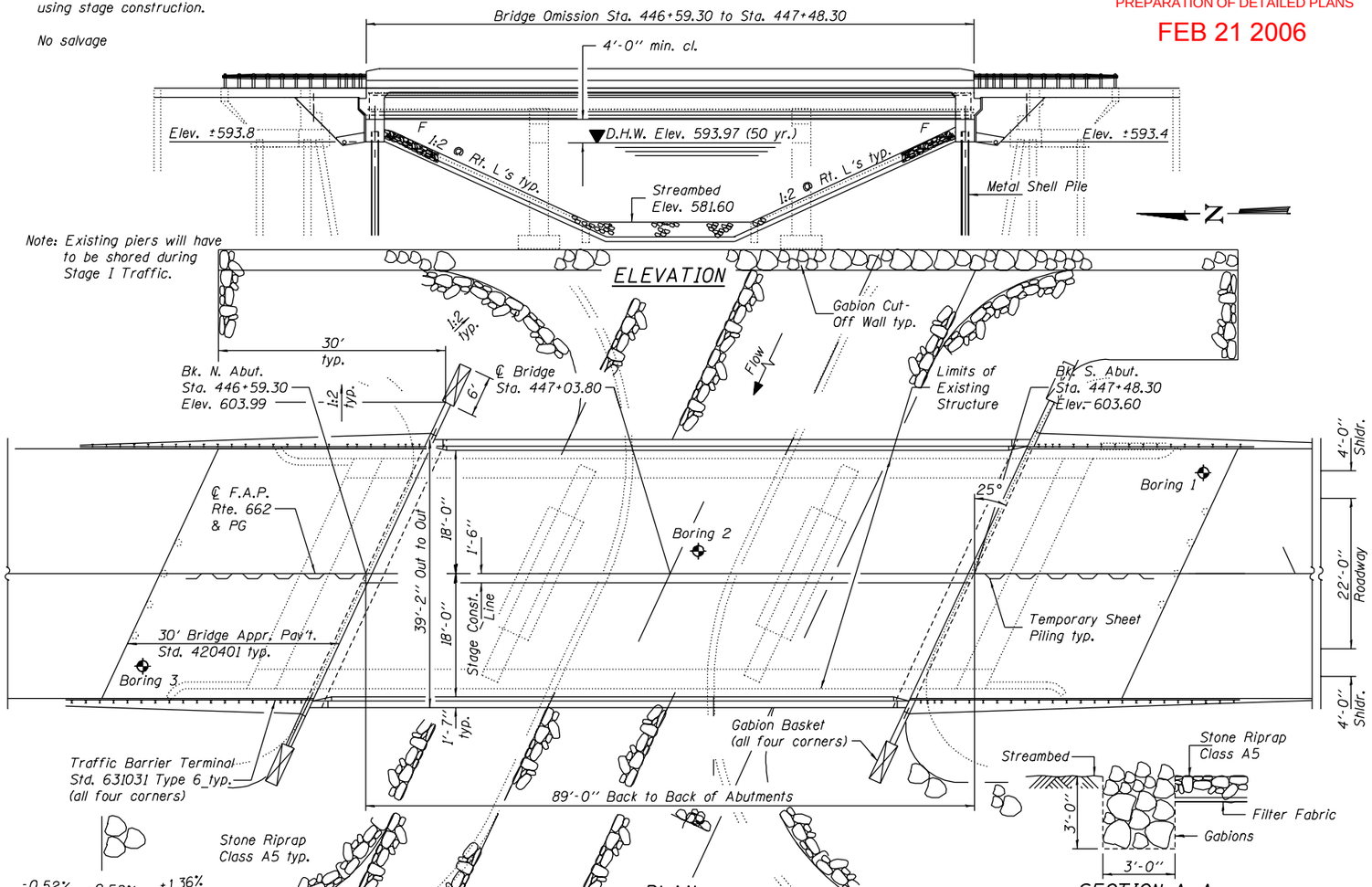

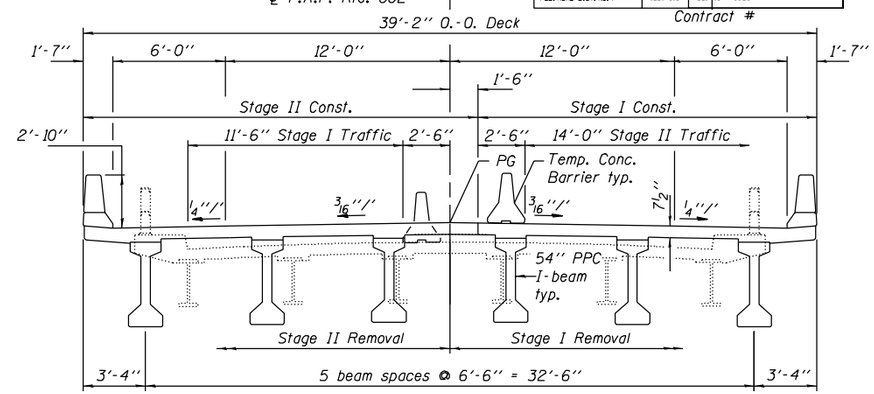

CROSS SECTION
(Looking South)

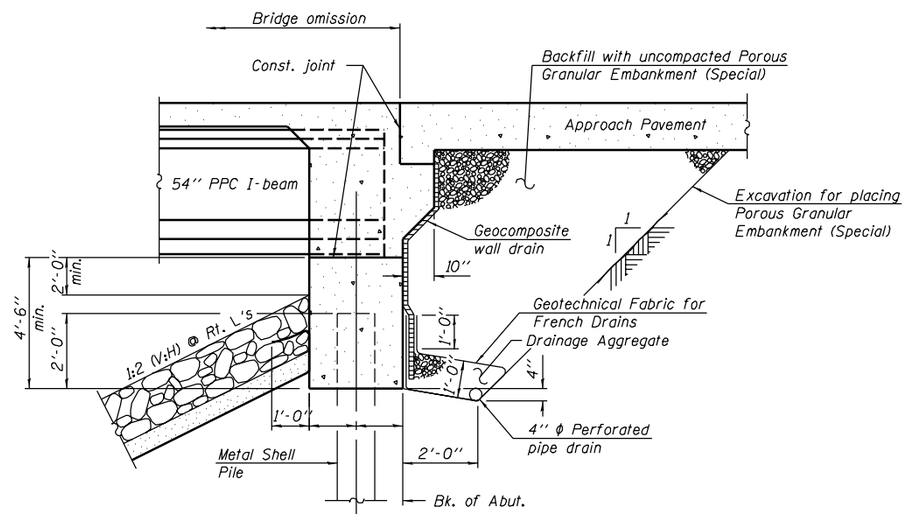

SECTION THRU INTEGRAL ABUTMENT
(Horiz. dim. @ Rt. L's)

Design Scour Elevation	N. Abut.	S. Abut.
	593.8	593.4

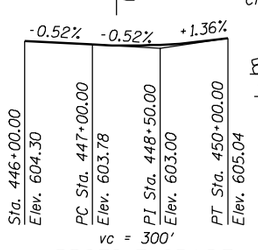

PROFILE GRADE

HIGHWAY CLASSIFICATION

F.A.P. Rte. 662 - Il. Rte. 4
Functional Class: Minor Arterial
ADT: 4050 (2001); 5000 (2023)
ADTT: 11%
Design Speed: 55 m.p.h.
Posted Speed: 55 m.p.h.

LOADING HL-93

Allow 50#/sq. ft. for future wearing surface.

WATERWAY INFORMATION

Exist. Low Grade Elev. 602.40 @ Sta. 447+08.8
Prop. Low Grade Elev. 603.58 @ Sta. 447+60

Drainage Area = 14.5 sq. mi.									
Flood	Freq. Yr.	Q C.F.S.	Opening Sq. Ft. Exist.	Opening Sq. Ft. Prop.	Nat. H.W.E.	Head - Ft. Exist.	Head - Ft. Prop.	Headwater El. Exist.	Headwater El. Prop.
	10	2599	460	570	592.83	0.21	0.00	593.04	592.83
Design	50	4020	534	652	593.97	0.69	0.20	593.52	593.03
Base	100	4629	562	682	594.37	0.92	0.34	593.75	593.17
Overtopping	-	-	-	-	-	-	-	-	-
Max. Calc.	500	6099	622	748	595.22	1.56	0.76	594.39	593.59

DESIGN SPECIFICATIONS

2004 AASHTO LRFD with 2005 Interims

DESIGN STRESSES

FIELD UNITS

f'_c = 3,500 psi
f_y = 60,000 psi (reinforcement)

PRECAST PRESTRESSED UNITS

f'_c = 6,000 psi
f'_{ci} = 5,000 psi
f'_s = 270,000 psi (½''ϕ low lax. strands)
f_{si} = 201,960 psi (½'' ϕ low lax. strands)

SEISMIC DATA

Seismic Performance Zone (SPZ) = 1
Bedrock Acceleration Coefficient (A) = 6.7%g
Site Coefficient (S) = 1.5

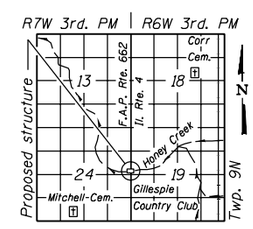

LOCATION SKETCH

GENERAL PLAN
ILLINOIS ROUTE 4 OVER
HONEY CREEK
F.A.P. ROUTE 662
SECTION (V,T)B-2
MACOUPIN COUNTY
STATION 447+03.80
STRUCTURE NO. 059-0504

DESIGNED	J.A. Elston
CHECKED	A. Siudyla
DRAWN	W.D. Collins
CHECKED	B.V. Garde

- 200

EXAMINED
ENGINEER OF BRIDGE DESIGN
PASSED
ENGINEER OF BRIDGES AND STRUCTURES