B.M. : Chiseled "□" in top of Existing N.W. Abutment of GWWR bridge over BNSFR, Elev. 711.302

Existing Structure: None.
Railroad Traffic to be maintained using during construction.

ROUTE NO.	SECTION	COUNTY	TOTAL SHEETS	SHEET NO.
FAP 753	(128X)R, VB	MORGAN		
FED. ROAD DIST. NO.		ILLINOIS	FED. AID PROJ.	

SHEET 1 OF 2

APPROVED

OCT 04 2002

AS A BASIS FOR PREPARATION OF DETAILED PLANS

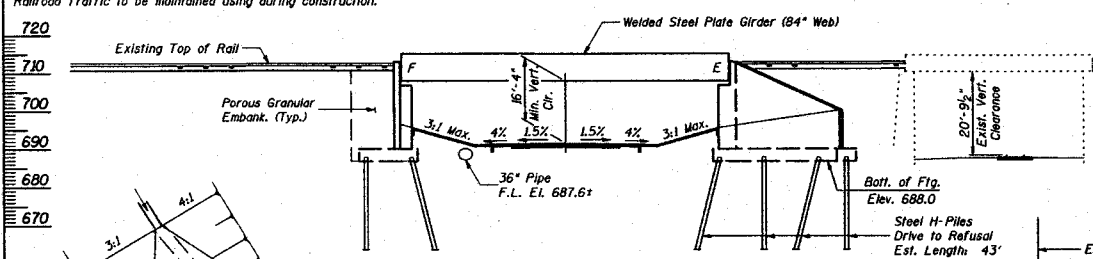

ELEVATION

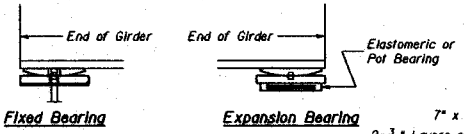

BEARINGS

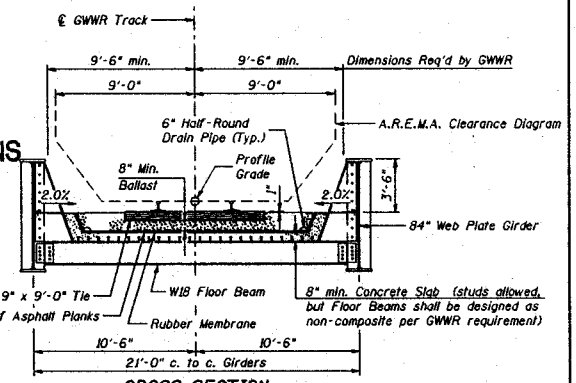

CROSS SECTION
(Looking East)

Note: Sizes of steel members are subject to refinement during final design.

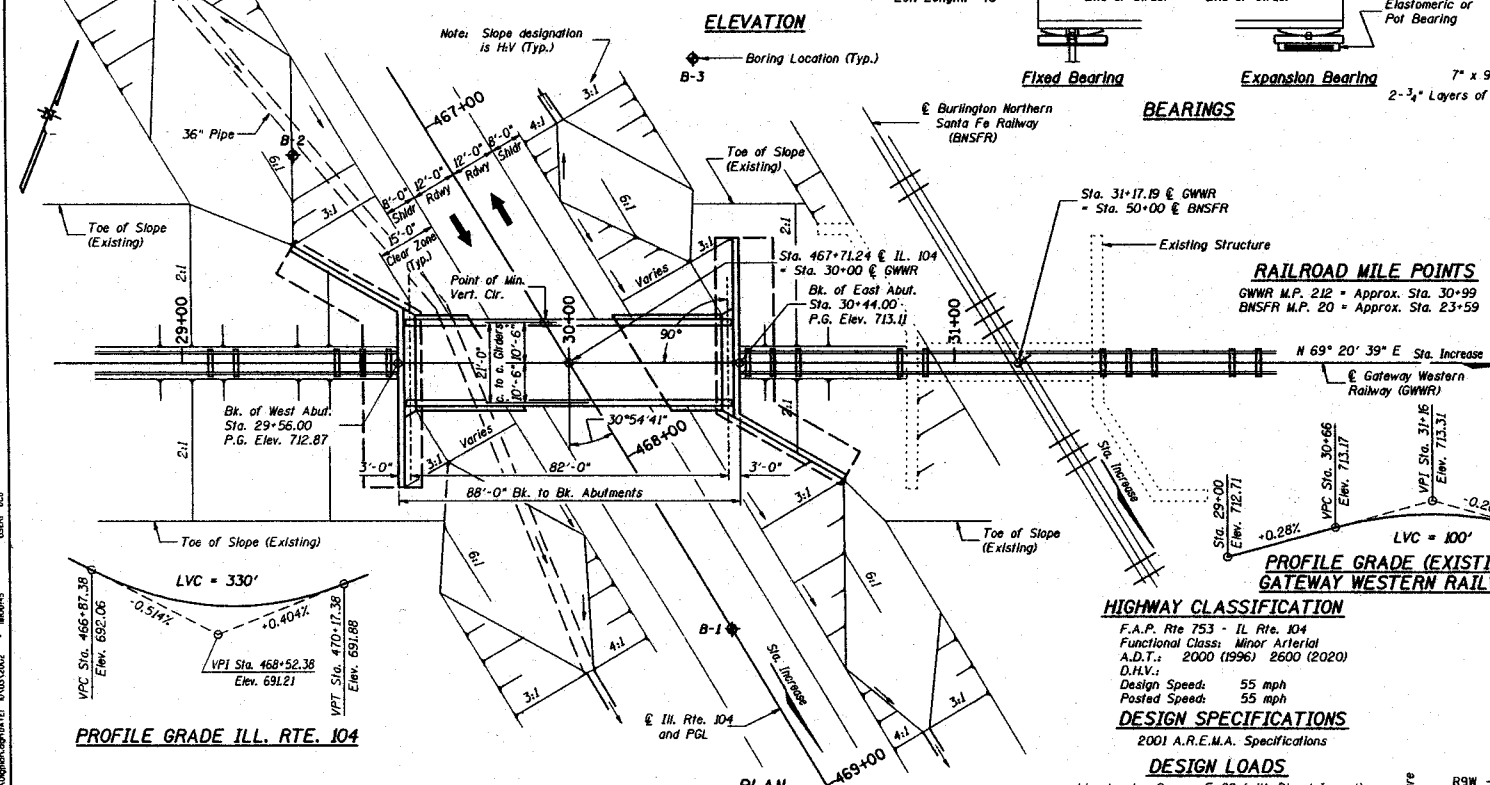

RAILROAD MILE POINTS

GWWR M.P. 212 = Approx. Sta. 30+99
BNSFR M.P. 20 = Approx. Sta. 23+59

PROFILE GRADE ILL. RTE. 104

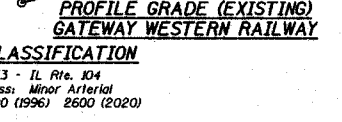

PROFILE GRADE (EXISTING)
GATEWAY WESTERN RAILWAY

HIGHWAY CLASSIFICATION

F.A.P. Rte 753 - IL Rte. 104
Functional Class: Minor Arterial
A.D.T.: 2000 (1996) 2600 (2020)
D.H.V.:
Design Speed: 55 mph
Posted Speed: 55 mph

DESIGN SPECIFICATIONS

2001 A.R.E.M.A. Specifications

DESIGN LOADS

Live Load = Cooper E-80 (with Diesel Impact)

DESIGN STRESSES

FIELD AND PRECAST UNITS

f'c = 3,500 psi
fy = 60,000 psi (Reinforcement)
fy = 50,000 psi (Struct. Steel-Gr. 50W)

SEISMIC DATA

Seismic Performance Category (SPC) = A
Bedrock Acceleration Coefficient (A) = 0.05
Site Coefficient (S) = 1.5

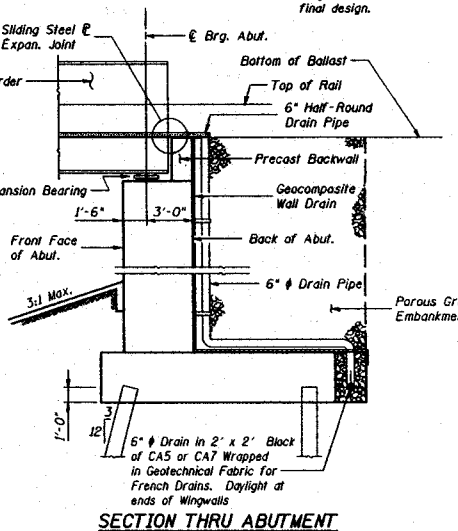

SECTION THRU ABUTMENT

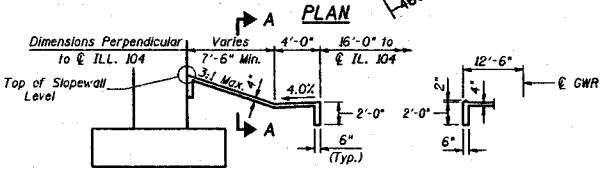

PLAN

SECTION THRU SLOPEWALL

SECTION A-A

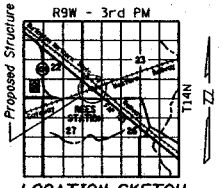

LOCATION SKETCH

STATE OF ILLINOIS
DEPARTMENT OF TRANSPORTATION

GENERAL PLAN (TS&L)
GATEWAY WESTERN RAILWAY OVER
ILLINOIS ROUTE 104
F.A.P. RTE. 753 SECTION (128X)R, VB
MORGAN COUNTY
STATION 467+71.24
STRUCTURE NO. 069-0046

DESIGNED	DCD
CHECKED	CDB
DRAWN	P. Ray
CHECKED	DCD

ROUTE NO.	SECTION	COUNTY	TOTAL SHEETS	SHEET NO.
FAP 753	(128X)R, VB	MORGAN		
FED. ROAD DIST. NO.		ILLINOIS	FED. AID PROJ.	

SHEET 2 OF 2

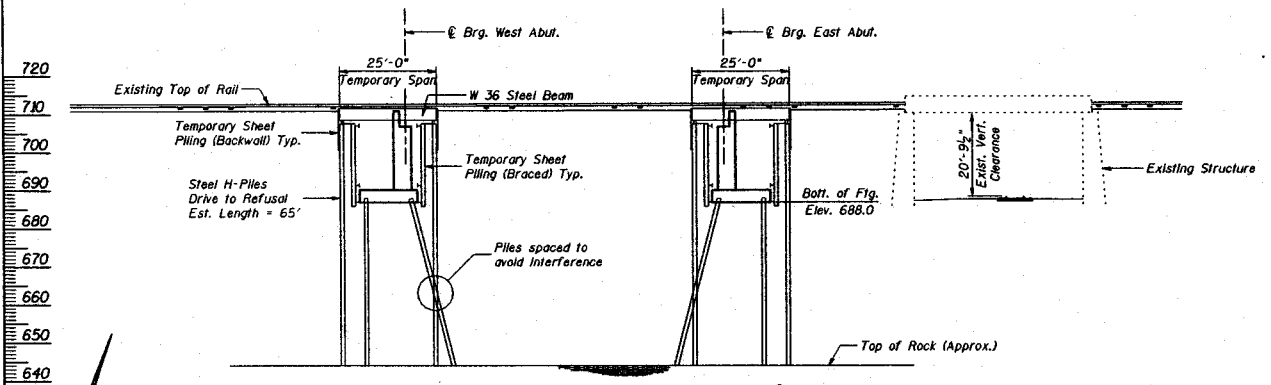

SECTION ALONG ℄ RAILROAD

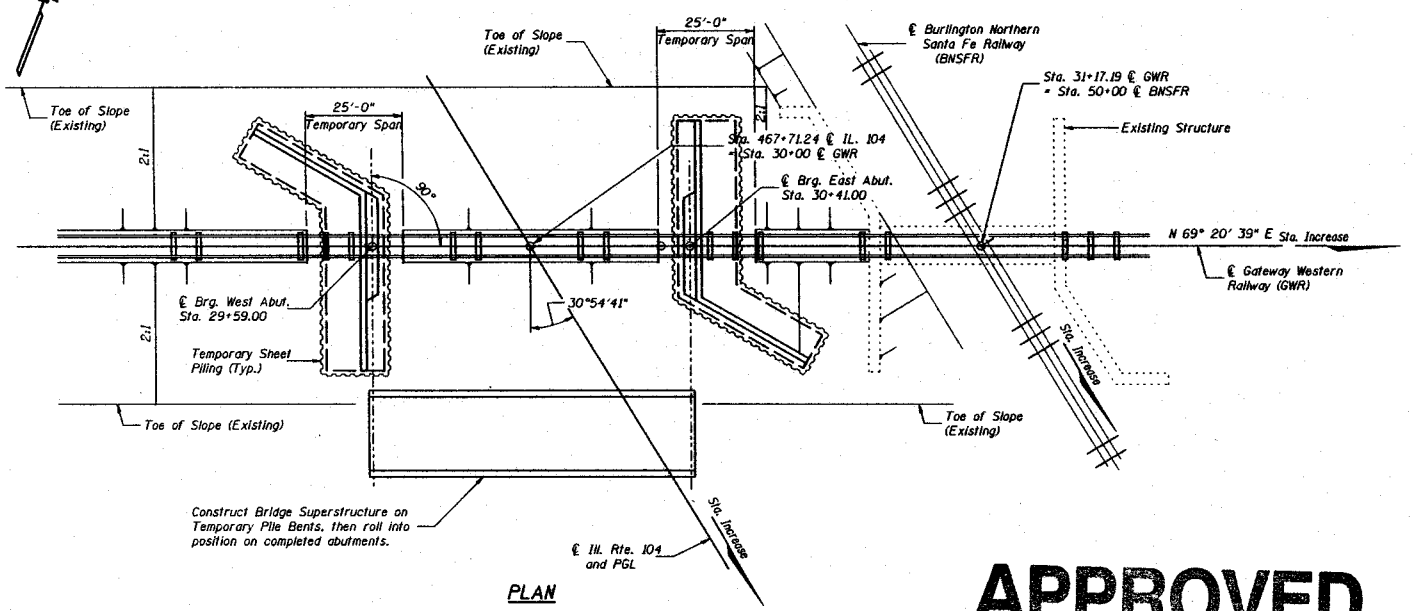

PLAN

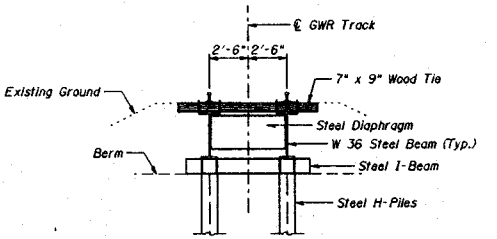

CROSS SECTION

(Temporary Span)

CONSTRUCTION SEQUENCE (PRELIMINARY)

Construct Temporary Spans at Abutments

1) During construction of pile bents for temporary spans, remove and replace a short section of track as needed to maintain railway traffic.
2) Drive piles and construct pile bents for temporary spans at abutments.
3) Excavate between pile bents to allow temporary span installation.
4) Install prefabricated temporary spans onto pile bents, and connect track at each end.

Construct Abutments

5) During abutment construction, remove temporary span as needed for construction access, replace to accommodate railway traffic.
6) Drive temporary sheet piling for abutment excavation.
7) Excavate within sheet piling for abutment. Provide required bracing as excavation proceeds deeper.
8) Drive bearing piles for abutment footing.
9) Construct concrete abutment footing and stem.
10) Backfill behind abutment with porous granular embankment.
11) Remove temporary sheet piling.

Construct Superstructure

12) Construct temporary pile bents at toe of slope to support permanent span during erection.
13) Erect permanent bridge span on temporary bents.
14) Close the railway to traffic.
15) Remove temporary spans and pile bents at abutments.
16) Excavate between abutments deep enough to install permanent bridge span.
17) Install permanent bridge span by rolling from temporary bents to abutment bearings.
18) Install precast abutment backwall.
19) Backfill behind abutment backwall and connect track at each end of bridge.
20) Reopen railway to traffic.

Excavate for Roadway

21) Complete excavation and roadway construction beneath bridge.

APPROVED

OCT 04 2002

AS A BASIS FOR
PREPARATION OF DETAILED PLANS

STATE OF ILLINOIS
DEPARTMENT OF TRANSPORTATION

STAGED CONSTRUCTION
GATEWAY WESTERN RAILWAY OVER
ILLINOIS ROUTE 104
F.A.P. RTE. 753 SECTION (128X)R, VB
MORGAN COUNTY
STATION 467+71.24
STRUCTURE NO. 069-0046

DESIGNED	DCD
CHECKED	CDB
DRAWN	P. Ray
CHECKED	DCD