Bench Mark: X-Cut in N.W. Corner of Concrete Abutment @ Center Pier of ILL. Central R.R. Bridge over ILL. Rte. 3.

Existing Structures: S.N. 082-0141, Built as F.A.I. Rte. 70, Sec. 82-3HVB-3R-3, Sta. 69+00 to 93+78 in 1967.
Superstructure: Two-Girder Steel Spans (Typical Non-Composite) with Reinforced Concrete Deck (Approximately 2,250' long by 24' wide).
Substructure: Reinforced Concrete Piers (Two Circular Column with Tie Beam at the Top and Cross Wall at Bottom)
Traffic shall be maintained during the Repair/retrofit.

RECEIVED
JUL 02 2002
BRIDGE ENGINE

SCOPE OF WORK

SEISMIC RETROFIT

1. Install column wraps on the selected piers.
2. Install tie beam wraps on the selected piers.
3. Install cross frame assembly on the selected piers.
4. Install floor beam/column connection assembly on the selected piers.
5. Install slab/floor beam connections at the selected piers.
6. Install bumper assemblies on the selected piers
7. Modify foundation dowels on the selected piers.
8. Install seismic isolation bearings at selected piers.

FATIGUE & REDUNDANCY RETROFIT

1. Perform stiffener intersection modification on the selected structures.
2. Perform bottom flange splice - bolt replacement on the selected structures.
3. Perform crack extension retrofits on the selected structures.
4. Install redundancy web plates on structures.
5. Install redundancy beams and supporting column collars at the selected piers.

LOADING HS20-44

SEISMIC DATA

Seismic Performance Category (SPC) = B
Bedrock Acceleration Coefficient (A) = 0.12g
Site Coefficient (S) = 1

DESIGN SPECIFICATIONS

1996 AASHTO with 1997, 1998, 1999, and 2000 Interims
1995 Seismic Retrofitting Manual for Highway Bridges FHWA-RD-94-052

HIGHWAY CLASSIFICATION

F.A.I. Route 70 - Poplar Street Complex
Functional Class: Collector - Distributor Roadways
A.D.T.: 1,000 (2,000); 1,100 (2020)
D.H.V.: 100
Design Speed: 50 mph
Posted Speed: 50 mph

DESIGN STRESSES

FIELD UNITS (ORIGINAL)

f_c = 1,400 psi (Super-, and Sub-structures)
f_s = 20,000 psi (A36 Structural Steel)
f_s = 20,000 psi (Reinforcement)
f_y = 40,000 psi (Reinforcement)

FIELD UNITS (Previous Repair)

f_c = 3,500 psi
f_y = Varies, 36,000 - 50,000 psi (Structural Steel)
f_y = 60,000 psi (Reinforcement)

FIELD UNITS (NEW)

f_c = 4,000 psi
f_y = 36,000 psi (M270 Grade 36)
f_s = 70,000 psi (M270 Grade HPS 70W)
f_y = 60,000 psi (Reinforcement)

LOCATION SKETCH

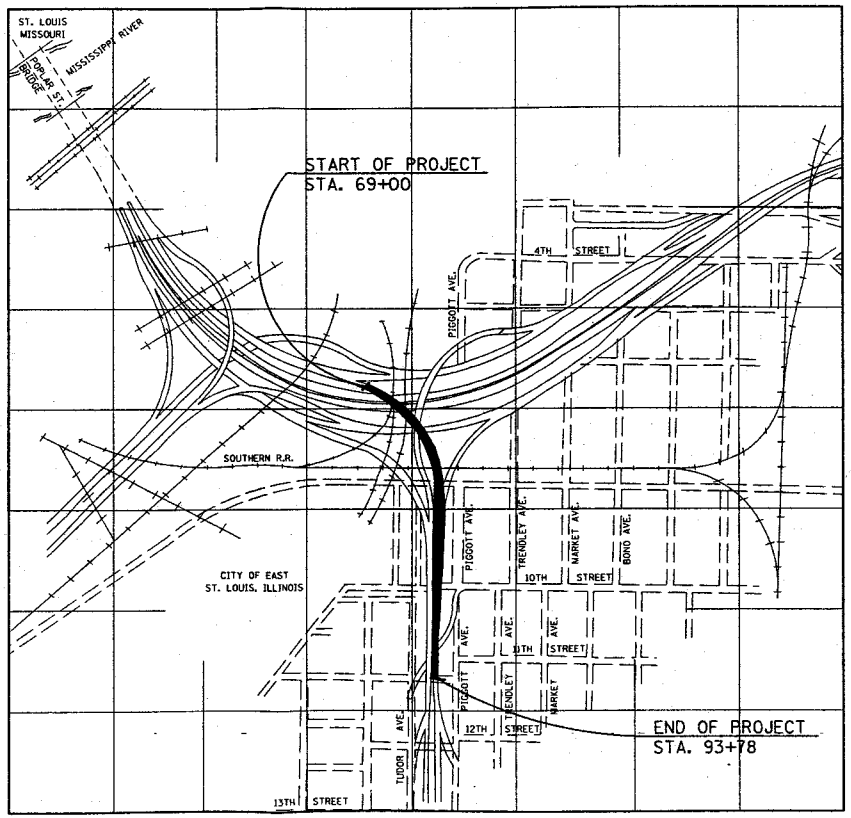

STRUCTURE NO. 082-0141 (RAMP A)

DISTRICT 8

APPROVED

JAN 27 2003

AS A BASIS FOR
PREPARATION OF DETAILED PLANS

POPLAR STREET BRIDGE APPROACHES

F.A.I. ROUTE 70

SECTION 82-3HVB-3R-3

ST. CLAIR COUNTY

STRUCTURE NO. 082-0141 (RAMP A)

STATE OF ILLINOIS
DEPARTMENT OF TRANSPORTATION

ROUTE NO.	SECTION	COUNTY	SHEET	TOTAL SHEETS
F.A.I. 70		ST. CLAIR	4	4 SH

82-3HVB-3R-3

RECEIVED
JUL 02 2002
BRIDGE ENGINEE

APPROVED
JAN 27 2003
AS A BASIS FOR
PREPARATION OF DETAILED PLANS

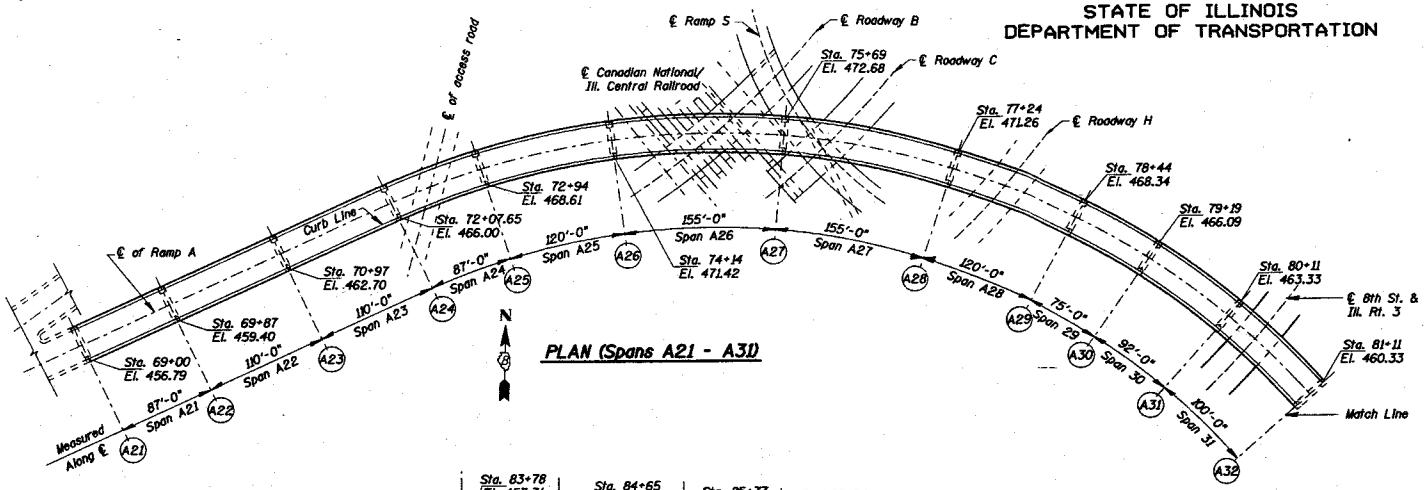

PLAN (Spans A21 - A31)

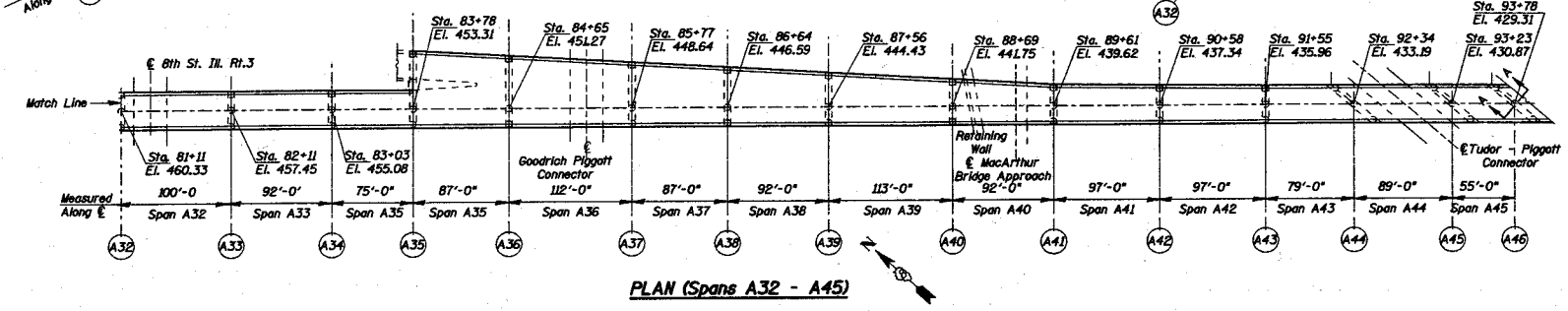

PLAN (Spans A32 - A45)

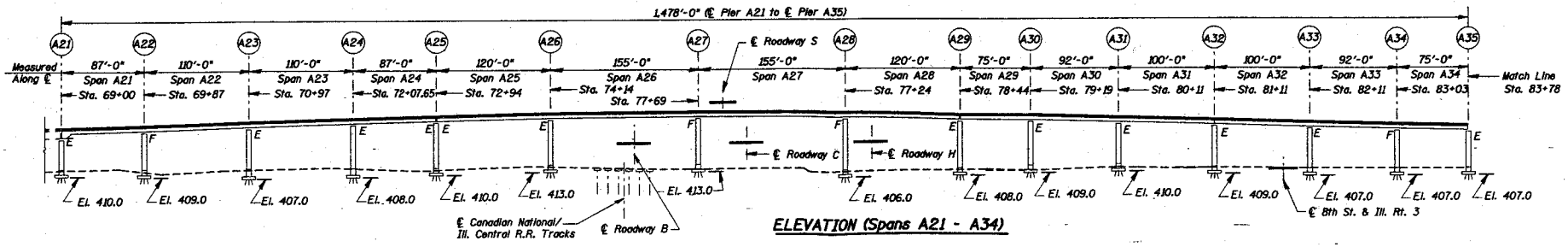

ELEVATION (Spans A21 - A34)

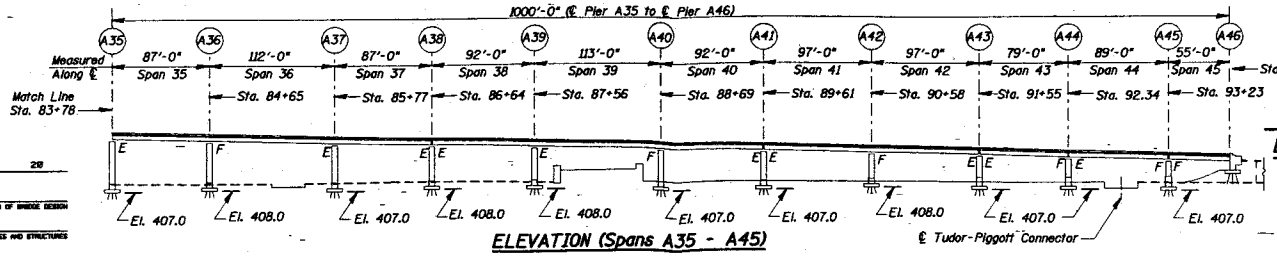

ELEVATION (Spans A35 - A45)

DESIGNED	NGH / JCM
CHECKED	HH
DRAWN	TCS
CHECKED	SH

EXAMINED _____ 20
ENGINEER OF BRIDGE DESIGN
PASSED
ENGINEER OF BRIDGES AND STRUCTURES

GENERAL PLANS AND ELEVATIONS O
EXIST. POPLAR STREET BRIDGE APPR
F.A.I. ROUTE 70
SECTION 82-3HVB-3R-3
ST. CLAIR COUNTY
STRUCTURE NO. 082-0141 (RAMP

STATE OF ILLINOIS
DEPARTMENT OF TRANSPORTATION

ROUTE NO.	SECTION	COUNTY	TOTAL SHEETS	SHEET NO.
F.A.I. 70	⊛	ST. CLAIR	4	2

⊛ 82-3HVB-3R-3

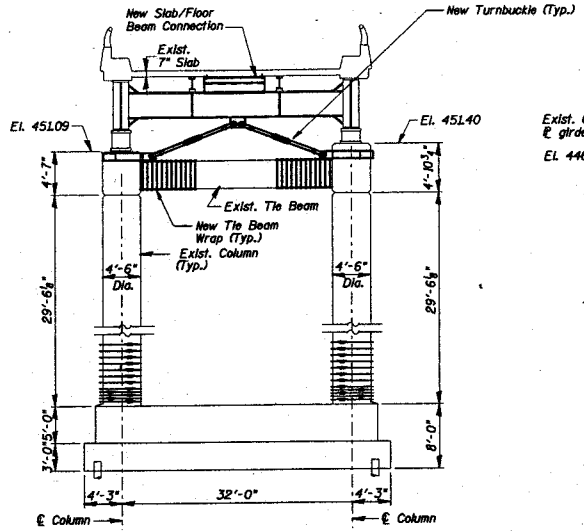

ELEVATION PIER A22 SHOWING TYPICAL CROSS FRAME, TIE BEAM WRAPS, COLUMN WRAPS AND SLAB/FLOOR BEAM CONNECTION

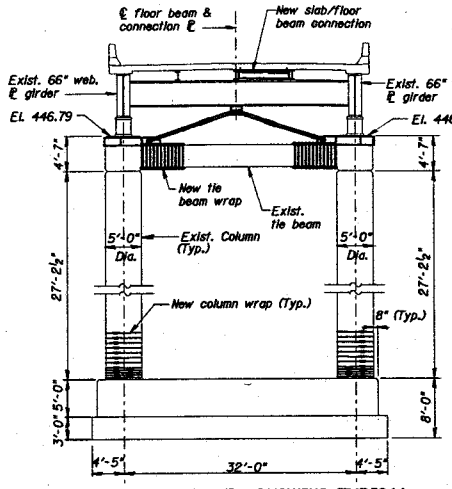

ELEVATION PIER A34 SHOWING TYPICAL CROSS FRAME, COLUMN WRAPS AND SLAB/FLOOR BEAM CONNECTION

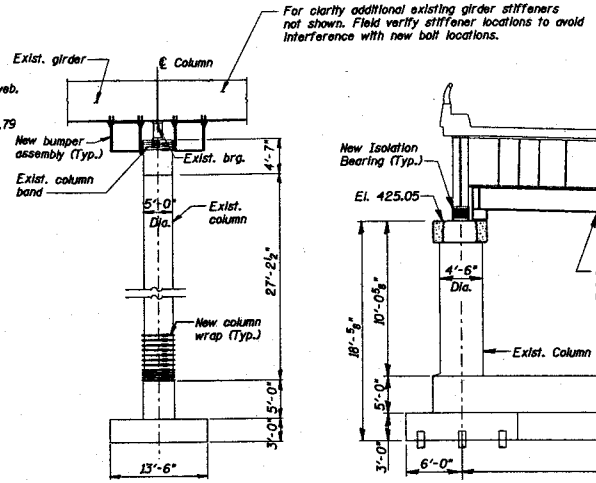

ELEVATION PIER A34 SHOWING COLUMN WRAP AND BUMPERS

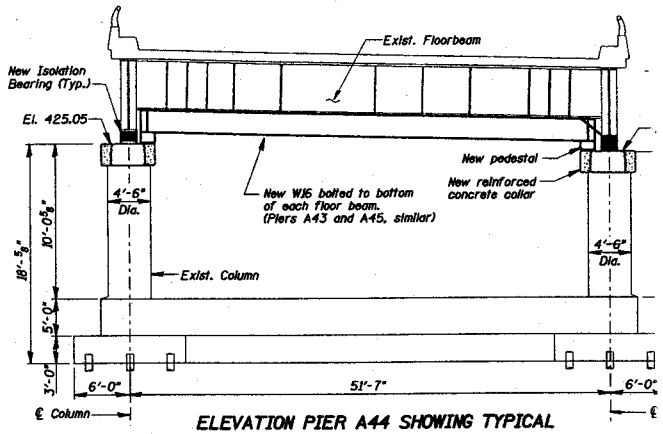

ELEVATION PIER A44 SHOWING TYPICAL ISOLATION BEARING AND REDUNDANCY BEAM

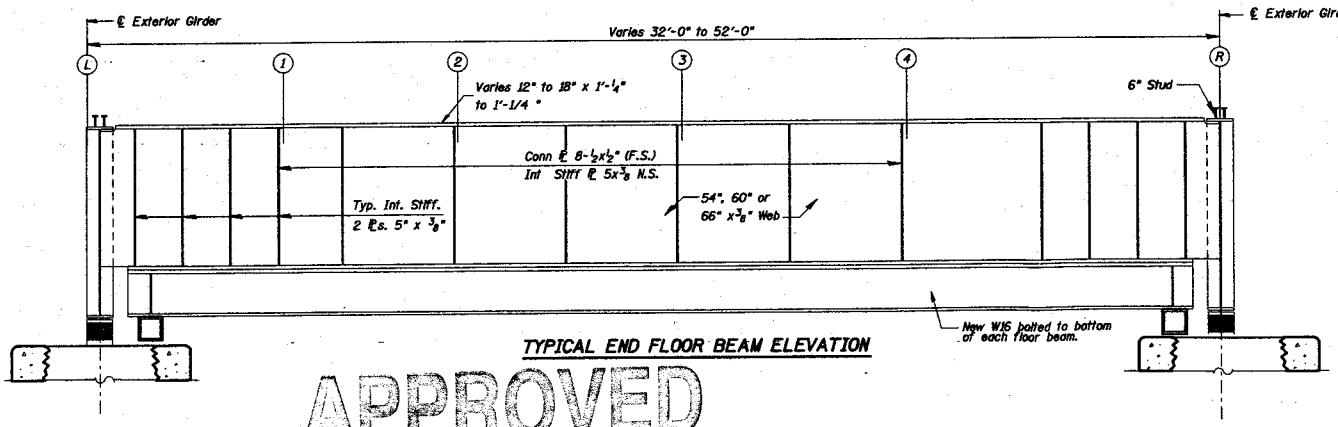

TYPICAL END FLOOR BEAM ELEVATION

RECEIVED
JUL 02 2002
BRIDGE ENGINEER

APPROVED
JAN 27 2003
AS A BASIS FOR PREPARATION OF DETAILED PLANS

Notes:
1. Modify foundation dowels
2. Install Isolation Bearings

SEISMIC RETROFIT QUANTITIES

PIER	COLUMN WRAPS	CROSS FRAME	BUMPER SETS	SHEAR TRANSFER	TIE BEAM WRAPS
A21					
A22	2	1		1	2
A23	2		2	1	
A24				1	
A25				1	
A26				1	
A27				1	
A28				1	
A29				1	
A30				1	2
A31				1	2
A32				1	
A33				1	
A34	2	1	2	1	2
A35					
A36	2			1	
A37	2	1		1	
A38					
A39	2	1		1	
A40	2	1		1	
A41					
A42	2			1	
A43					
A44				1	
A45				1	

REDUNDANCY BEAM RETROFIT QUANTITIES

WORK ITEM	QUANTITY
BOTTOM FLANGE REINFORCEMENT	25,334 lbs
CONCRETE COLLAR	6 each

DESIGNED	MGH / JCM
CHECKED	HH
DRAWN	TCS
CHECKED	SH

EXAMINED
ENGINEER OF BRIDGE DESIGN
PASSED
ENGINEER OF BRIDGES AND STRUCTURES

TYPICAL SEISMIC & REDUNDANCY RETROFIT MODIFI
POPLAR STREET BRIDGE APPROACHES
F.A.I. ROUTE 70 - SECTION 82-3HVB-3R-3
ST. CLAIR COUNTY
STRUCTURE NO. 082-0141 (RAMP A)

APPROVED

JAN 27 2003

STATE OF ILLINOIS
DEPARTMENT OF TRANSPORTATION

AS A BASIS FOR PREPARATION OF DETAILED PLANS

ROUTE NO.	SECTION	COUNTY	TOTAL SHEETS	SHEET NO.
F.A.I. 70	82	ST. CLAIR	4	3
PROJECT REFERENCE NO.		SUPERSEDES	PROJECT	
			82-3HVB-3R-3	

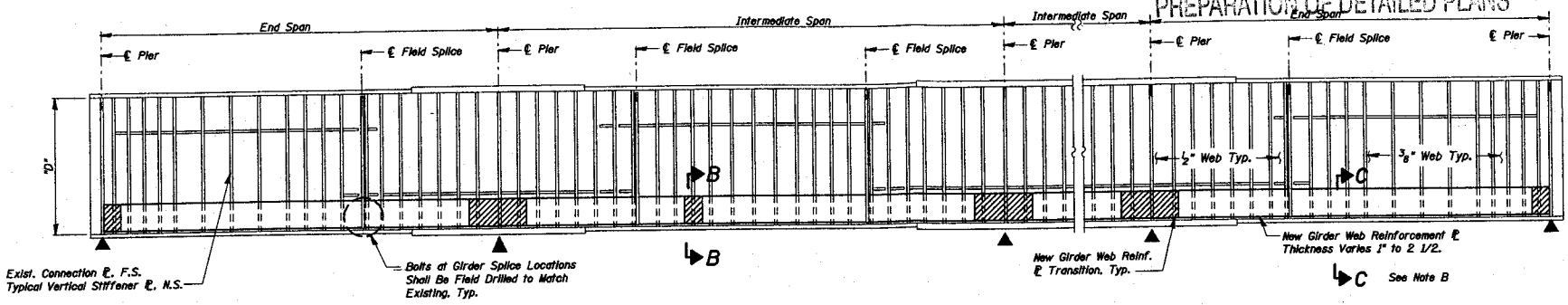

Note B:
In spans with girder web thickness of ⅝" or ¾", see Detail 6.

RECEIVED
JUL 02 2002
BRIDGE ENGINEER

GIRDER ELEVATION INDICATING WEB REINFORCEMENT PLATE

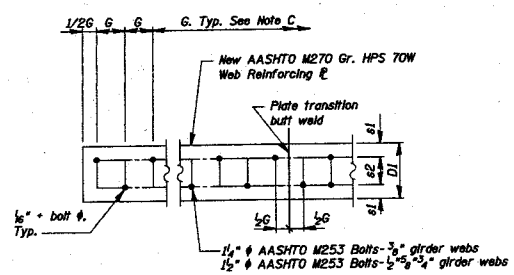

Note C:
Bolt hole locations must be field verified. Longitudinal hole positions will require adjustments in the vicinity of floor beam connections, interior stiffener plates and web splices. Where an interior stiffener plate interferes with bolt spacings., adjust spacing of bolt the minimum amount required to avoid stiffener and then resume spacing, G.

DETAIL 3 - WEB REINFORCEMENT PLATE ELEVATION

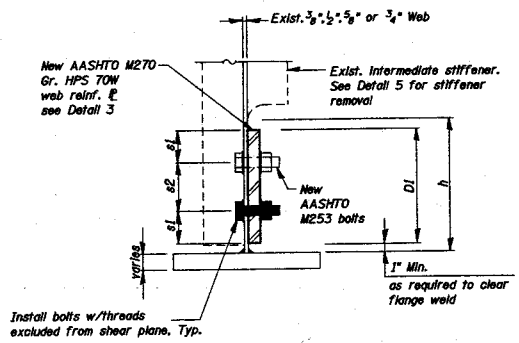

SECTION C-C - TYPICAL WEB REINFORCEMENT PLATE

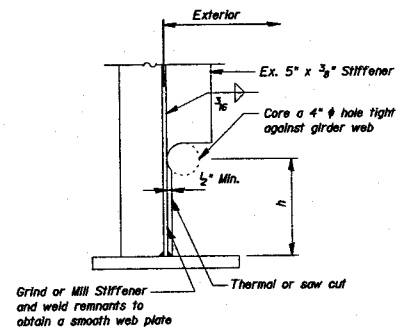

Procedure for Detail 5:

1. Core a 4" ϕ hole tight against girder web. Do not notch or gouge web plate.
2. Thermal or saw cut, horizontal cut and vertical cut. Vertical cut shall be positioned at least ½" away from girder web. Do not notch or gouge web plate.
3. Remove all stiffener remnants and connecting welds by grinding or milling. Web plate surface shall have a Roughness Average (Ra) of 250 or less.

DETAIL 5 - VERTICAL STIFFENER MODIFICATION

WEB REINFORCEMENT PLATE

D	D1	s1	s2	h	h1	Gmin. ½"	Gmin. ⅜"
66	10	2½	5	11	13	6	4½
72	12	3	6	13	15	6	4½

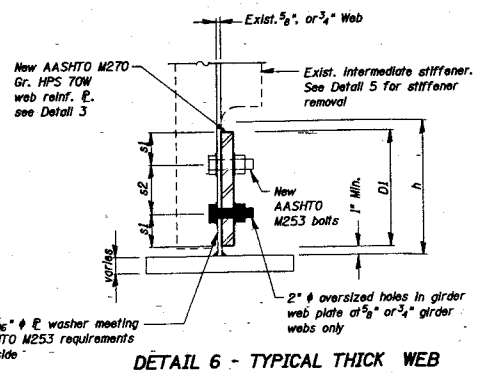

DETAIL 6 - TYPICAL THICK WEB REINFORCEMENT PLATE

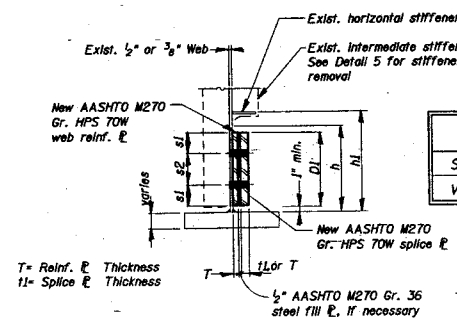

SECTION B-B - TYPICAL WEB REINFORCEMENT PLATE SPLICE

REDUNDANCY RETROFIT QUANTITIES

WORK ITEM	QUAN
STEEL WEB REINFORCEMENT PLATE	403,89
VERTICAL STIFFENER REMOVAL	1,116 e

DESIGNED	NGH / JCM
CHECKED	HH
DRAWN	TCS
CHECKED	SH

20

EXAMINED
ENGINEER OF BRIDGE DESIGN

PASSED
ENGINEER OF BRIDGES AND STRUCTURES

TYPICAL REDUNDANCY RETROFIT MODIFI
POPLAR STREET BRIDGE APPROACH
F.A.I. ROUTE 70 - SECTION 82-3HVB-
ST. CLAIR COUNTY
STRUCTURE NO. 082-0141 (RAMP A

APPROVED

JAN 2 7 2003

STATE OF ILLINOIS
DEPARTMENT OF TRANSPORTATION

AS A BASIS FOR
PREPARATION OF DETAILED PLANS

ROUTE NO.	SECTION	COUNTY	TOTAL SHEETS	SHEET NO.
F.A.I. 70	*	ST. CLAIR	4	4
FED. ROAD DIST. NO. 7	ILLINOIS	FED. AID PROJECT NO.		

* 82-3HVB-3R-3

RECEIV
JUL 0 2 20
BRIDGE ENGI

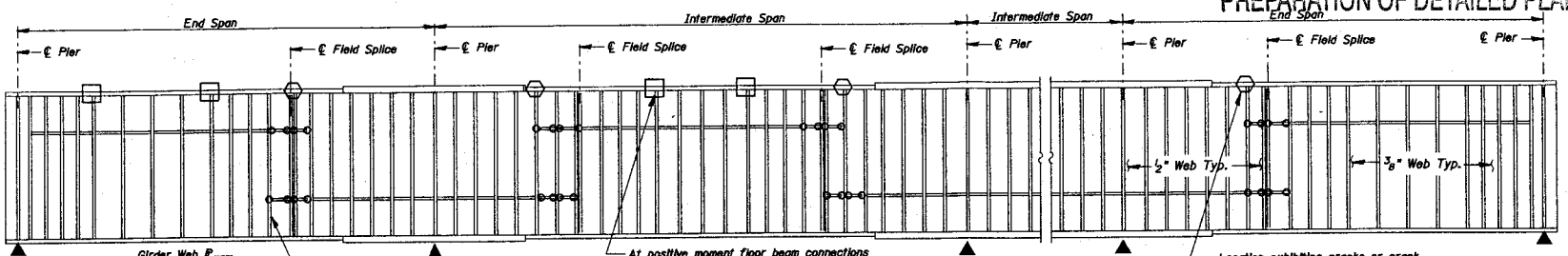

GIRDER ELEVATION INDICATING TYPICAL FRACTURE CONTROL MODIFICATION LOCATIONS

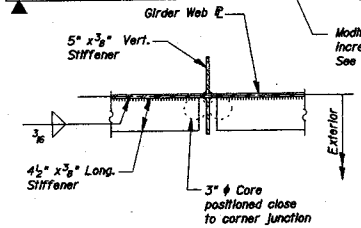

DETAIL 8 - STIFFENER INTERSECTION MODIFICATION

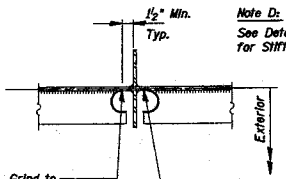

Note D:
See Detail 8 this sheet for Stiffener dimensions.

DETAIL 9 - STIFFENER INTERSECTION MODIFICATION

Procedure for Details 8 & 9:

1. Core 3" or 4" diameter holes positioned close to corner junction through ⅜" thick longitudinal stiffener as shown in Detail 8.
2. Remove material between core and intersection junction by grinding with carbide tools and a dye grinder as shown in Detail 9. Web plate surface shall have a roughness average (R_a) of 250 or less.
3. Remove all burrs from cut edge and check for irregularities. Cored surface shall have an R_a equal to 500 or less.
4. After burr removal the modification shall be inspected using magnetic particle (MT) methods. Notify Engineer if a crack is detected. (cost included with stiffener intersection modification).
5. The exposed steel surfaces shall be cleaned and painted using an aluminum epoxy mastic primer.
6. Obtain approval of Engineer before proceeding.
7. Paint area with top coat.

FATIGUE RETROFIT QUANTITIES

WORK ITEM	QUANTITY
STIFFENER INTERSECTION MODIFICATION	640 each
LONG SPAN FLOOR BEAM RETROFIT	18 each

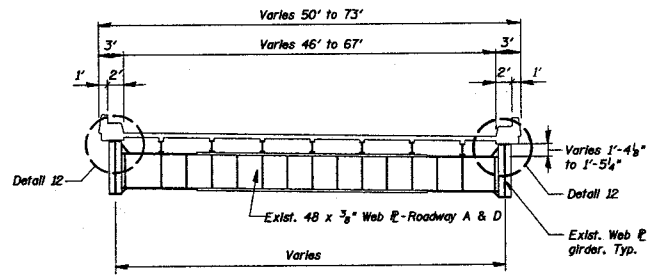

DETAIL 10 - LONG SPAN FLOOR BEAMS (> 50')

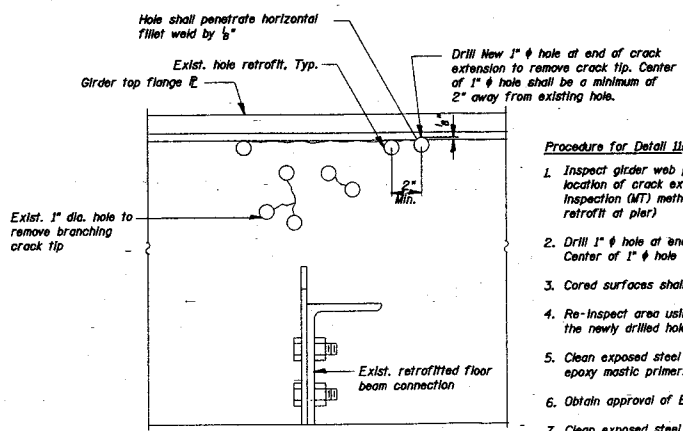

DETAIL 11 - CRACK EXTENSION RETROFIT AT FIRST INTERIOR FLOOR BEAM

Procedure for Detail 11:

1. Inspect girder web plate in region of existing retrofits to determine location of crack extension and crack tip using magnetic particle inspection (MT) methods. (Cost included with crack extension retrofit at pier)
2. Drill 1" ϕ hole at end of crack extension to remove crack tip. Center of 1" ϕ hole shall be positioned in accordance with Detail 11.
3. Cored surfaces shall have a Roughness Average (R) of 500 or less.
4. Re-inspect area using MT methods to verify crack does not extend past the newly drilled holes.
5. Clean exposed steel surface to remove contaminants and paint with aluminum epoxy mastic primer.
6. Obtain approval of Engineer.
7. Clean exposed steel surface to remove contaminants and paint with aluminum epoxy mastic primer.

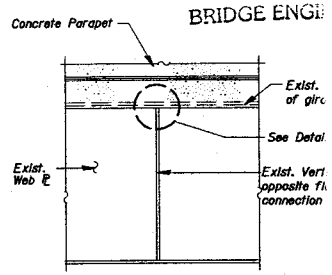

DETAIL 12 - EXTERIOR ELEVATION OF GIRDER AT FLOOR BEAM CONNECTION

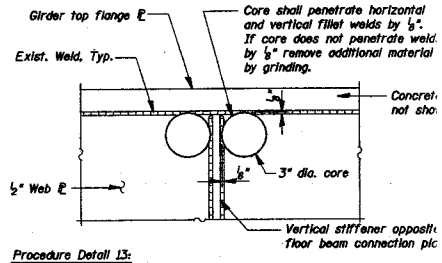

Procedure Detail 13:

1. Remove parapet concrete, as required for equipment access.
2. Core 3" or 4" diameter holes through web plate adjacent to the top as positioned in Detail 12. Core holes shall penetrate the horizontal vertical fillet welds approximately ⅛". If core does not penetrate we by ⅛", remove additional material by grinding. Remove all burrs fron cored or ground surface. Surface shall have a roughness average (of 500 or less.
3. Clean surface to remove any cutting oils or rusting and paint exposed steel surface with aluminum epoxy mastic primer.
4. Obtain approval of Engineer before proceeding.
5. Paint surfaces with top coat.

DETAIL 13 - LONG SPAN FLOOR BEAM RETROF

DESIGNED	MGH / JCM
CHECKED	HH
DRAWN	TCS
CHECKED	SH

20
EXAMINED
ENGINEER OF BRIDGE DESIGN
PASSED
ENGINEER OF BRIDGES AND STRUCTURES

TYPICAL FATIGUE RETROFIT MODIFIC
POPLAR STREET BRIDGE APPROAC
F.A.I. ROUTE 70 - SECTION 82-3HVB
ST. CLAIR COUNTY
STRUCTURE NO. 082-0141 (RAMP