..rk: X-Cut in N.W. Corner of Concrete Abutment @ Center Pier of ILL. Central R.R. Bridge over ILL. Rte. 3.

_xisting Structures: S.N. 082-0146, Built as F.A.I. Rte. 70, Sec. 82-3HVB-3R-3, Sta. 6+18 to 11+06 in 1967.
Superstructure: Two-Girder Steel Spans (Typical Non-Composite) with Reinforced Concrete Deck (Approximately 2,250' long by 24' wide).
Substructure: Reinforced Concrete Piers (Two Circular Column with Tie Beam at the Top and Cross Wall at Bottom)
Traffic shall be maintained during the Repair/retrofit.

RECEIV
JUL 0 2 20(
BRIDGE ENGI

SCOPE OF WORK

SEISMIC RETROFIT

1. Install column wraps on the selected piers.
2. Install tie beam wraps on the selected piers.
3. Install cross frame assembly on the selected piers.
4. Install floor beam/column connection assembly on the selected piers.
5. Install slab/floor beam connections at the selected piers.
6. Install bumper assemblies on the selected piers
7. Modify foundation dowels on the selected piers.

FATIGUE & REDUNDANCY RETROFIT

1. Perform bottom flange splice - bolt replacement on the selected structures.
2. Perform crack extension retrofits on the selected structures.
3. Install redundancy web plates on structures.

LOADING HS20-44

SEISMIC DATA

Seismic Performance Category (SPC) = B
Bedrock Acceleration Coefficient (A) = 0.12g
Site Coefficient (S) = 1

DESIGN SPECIFICATIONS

1996 AASHTO with 1997, 1998, 1999, and 2000 Interims
1995 Seismic Retrofitting Manual for Highway Bridges FHWA-RD-94-052

HIGHWAY CLASSIFICATION

F.A.I. Route 70 - Poplar Street Complex
Functional Class: Collector - Distributor Roadways
A.D.T.: 1,000 (2,000); 1,100 (2020)
D.H.V.: 100
Design Speed: 50 mph
Posted Speed: 50 mph

DESIGN STRESSES

FIELD UNITS (ORIGINAL)

f_c = 1,400 psi (Super-, and Sub-structures)
f_s = 20,000 psi (A36 Structural Steel)
f_s = 20,000 psi (Reinforcement)
f_y = 40,000 psi (Reinforcement)

FIELD UNITS (Previous Repair)

f'_c = 3,500 psi
f_y = Varies, 36,000 - 50,000 psi (Structural Steel)
f_y = 60,000 psi (Reinforcement)

FIELD UNITS (NEW)

f'_c = 4,000 psi
f_y = 36,000 psi (M270 Grade 36)
f_s = 70,000 psi (M270 Grade HPS 70W)
f_y = 60,000 psi (Reinforcement)

LOCATION SKETCH

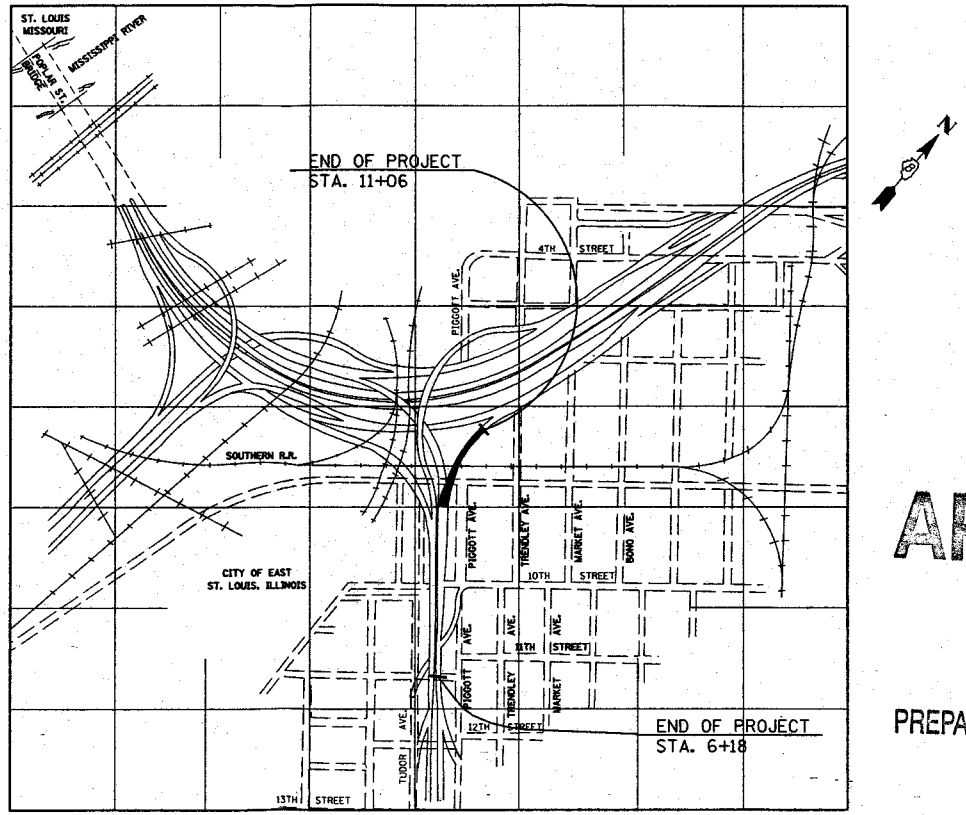

STRUCTURE NO. 082-0146 (RAMP T)

DISTRICT 8

APPROVED

JAN 2 7 2003

AS A BASIS FOR
PREPARATION OF DETAILED PLANS

POPLAR STREET BRIDGE APPROACH

F.A.I. ROUTE 70

SECTION 82-3HVB-3R-3

ST. CLAIR COUNTY

STRUCTURE NO. 082-0146 (RAMP T

STATE OF ILLINOIS
DEPARTMENT OF TRANSPORTATION

					SHEET
F.A.I. 70	*	ST. CLAIR	3	1	3 SH

* 82-3HVB-3R-3

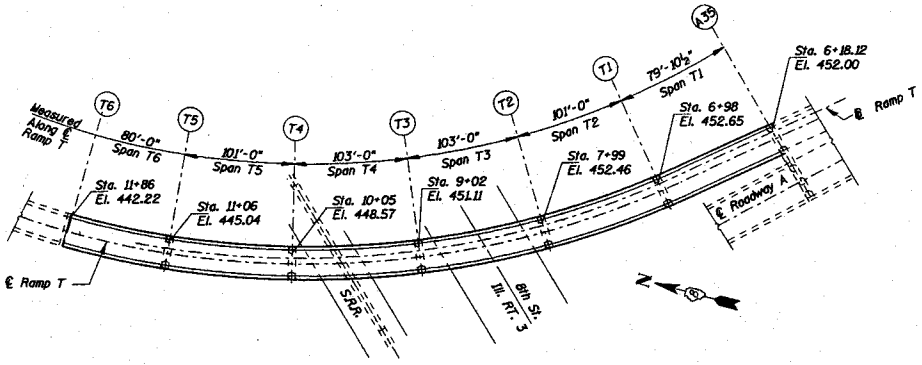

PLAN (Spans T1 - T5)

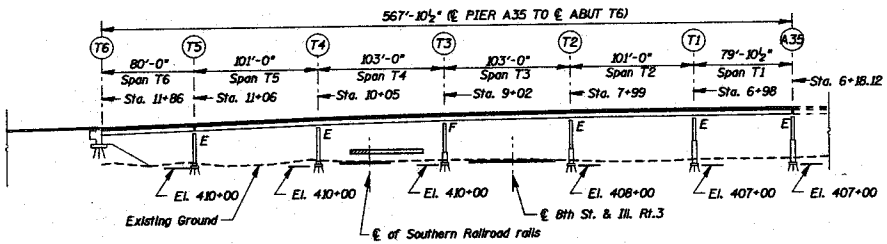

ELEVATION (Spans T1 - T5)

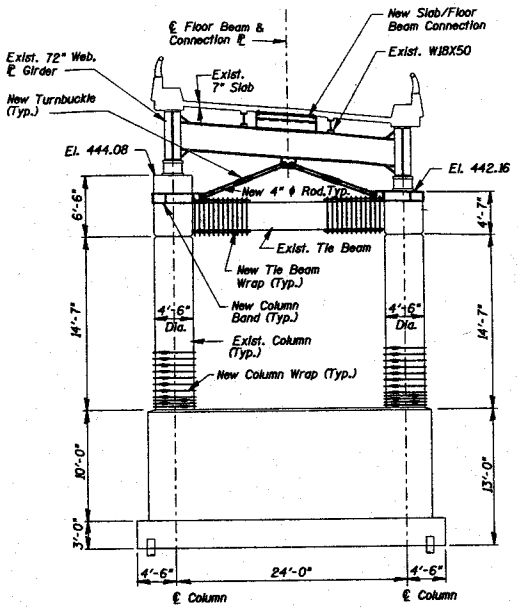

ELEVATION PIER T3 SHOWING TYPICAL CROSS FRAME, COLUMN WRAPS, TIE BEAM WRAPS and SLAB/FLOOR BEAM CONNECTION

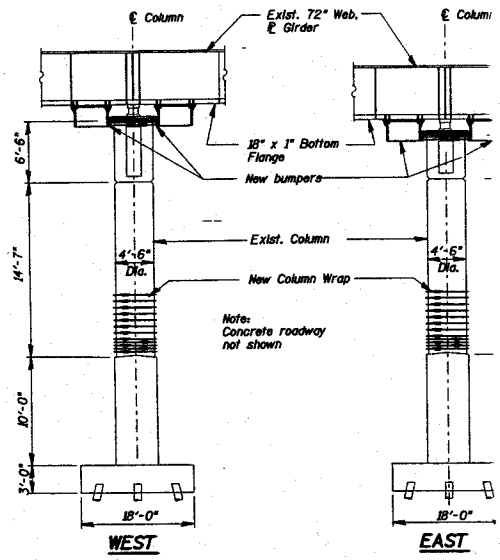

ELEVATIONS PIER T3 SHOWING TYPICAL COLUMN WRAPS and BUMPERS

SEISMIC RETROFIT QUANTITIES

PIER	COLUMN WRAPS	CROSS FRAME	BUMPER SETS	SHEAR TRANSFER	TIE BEAM WRAPS	OTHER
T1	2	1		1	2	
T2				1	2	
T3	2	1	2	1	2	NOTE 1
T4				1		
T5	2	1		1	2	

NOTES
1. Modify foundation dowels

APPROVED
JAN 27 2003
AS A BASIS FOR
PREPARATION OF DETAILED PLANS

RECEIVED
JUL 02 2002
BRIDGE ENGINEER

DESIGNED	NGH
CHECKED	HH
DRAWN	TCS
CHECKED	SH

20
EXAMINED
ENGINEER OF BRIDGE DESIGN
PASSED
ENGINEER OF BRIDGES AND STRUCTURES

TYPICAL SEISMIC RETROFIT MODIFICA
POPLAR STREET BRIDGE APPROAC
F.A.I. ROUTE 70
SECTION 82-3HVB-3R-3
ST. CLAIR COUNTY
STRUCTURE NO. 082-0146 (RAMP

STATE OF ILLINOIS
DEPARTMENT OF TRANSPORTATION

ROUTE NO.	SECTION	COUNTY	TOTAL SHEETS	SHEET NO.
F.A.I. 70	*	ST. CLAIR	3	2
FED. ROAD DIST. NO. 7	ILLINOIS	FED. AID PROJECT NO.		

* 82-3HVB-3R-3

SHEET 3 S

RECEIVED
JUL 02 2002
BRIDGE ENGIN.

APPROVED
JAN 27 2003
AS A BASIS FOR
PREPARATION OF DETAILED PLANS

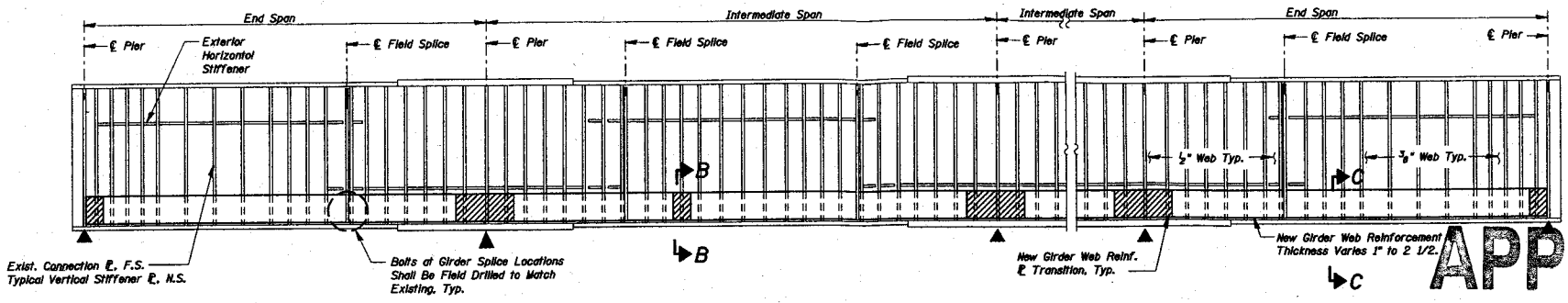

TYPICAL GIRDER ELEVATION INDICATING WEB REINFORCEMENT PLATE

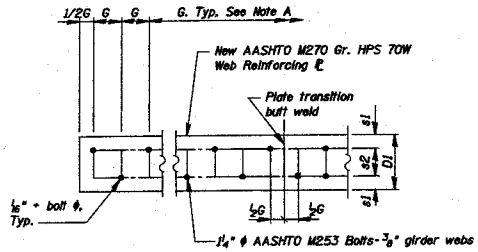

Note A
Bolt hole locations must be field verified. Longitudinal hole positions will require adjustments in the vicinity of floor beam connections, interior stiffener plates and web splices. Where an interior stiffener plate interferes with bolt spacings.. adjust spacing of bolt the minimum amount required to avoid stiffener and then resume spacing, G.

DETAIL 1 - WEB REINFORCEMENT PLATE ELEVATION

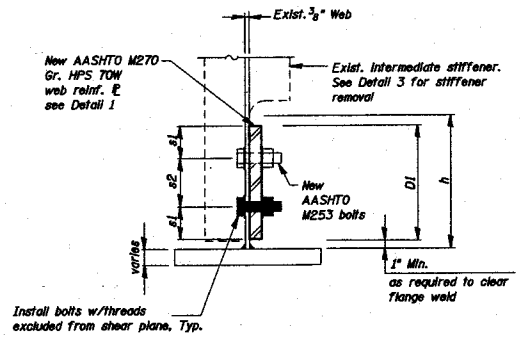

SECTION C-C - TYPICAL WEB REINFORCEMENT PLATE

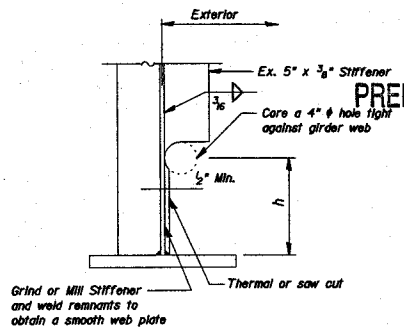

DETAIL 3 - VERTICAL STIFFENER MODIFICATION

Procedure for Detail 3:

1. Core a 4" ϕ hole tight against girder web. Do not notch or gouge web plate.
2. Thermal or saw cut, horizontal cut and vertical cut. Vertical cut shall be positioned at least ½" away from girder web. Do not notch or gouge web plate.
3. Remove all stiffener remnants and connecting welds by grinding or milling. Web plate surface shall have a Roughness Average (Ra) of 250 or less.

WEB REINFORCEMENT PLATE

D	D1	s1	s2	h	h1	Gmin. ½"	Gmin. ⅜"
72	12	3	6	13	15	6	4½

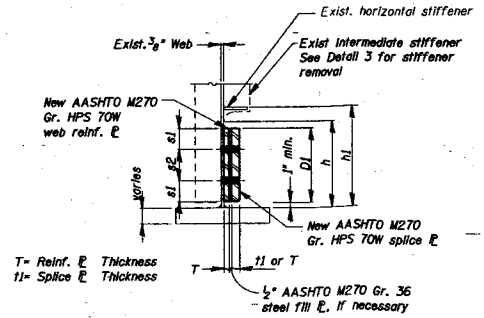

SECTION B-B - TYPICAL WEB REINFORCEMENT PLATE SPLICE

REDUNDANCY RETROFIT QUANTITIES

WORK ITEM	QUANTITY
STEEL WEB REINFORCEMENT PLATE	58,336 lbs
VERTICAL STIFFENER REMOVAL	276 each

DESIGNED	NGH / JCM
CHECKED	HH
DRAWN	TCS
CHECKED	SH

28

EXAMINED
ENGINEER OF BRIDGE DESIGN

PASSED
ENGINEER OF BRIDGES AND STRUCTURES

TYPICAL REDUNDANCY RETROFIT MODIF.
POPLAR STREET BRIDGE APPROAC
F.A.I. ROUTE 70 - SECTION 82-3HVB-
ST. CLAIR COUNTY
STRUCTURE NO. 082-0146 (RAMP

STATE OF ILLINOIS
DEPARTMENT OF TRANSPORTATION

ROUTE NO.	SECTION	COUNTY	TOTAL SHEETS	SHEET NO.
F.A.I. 70	#	ST. CLAIR	3	3
FED. ROAD DIST. NO. 7	ILLINOIS	FED. AID PROJECT- 3HVB		

82-3HVB-2R-1-1

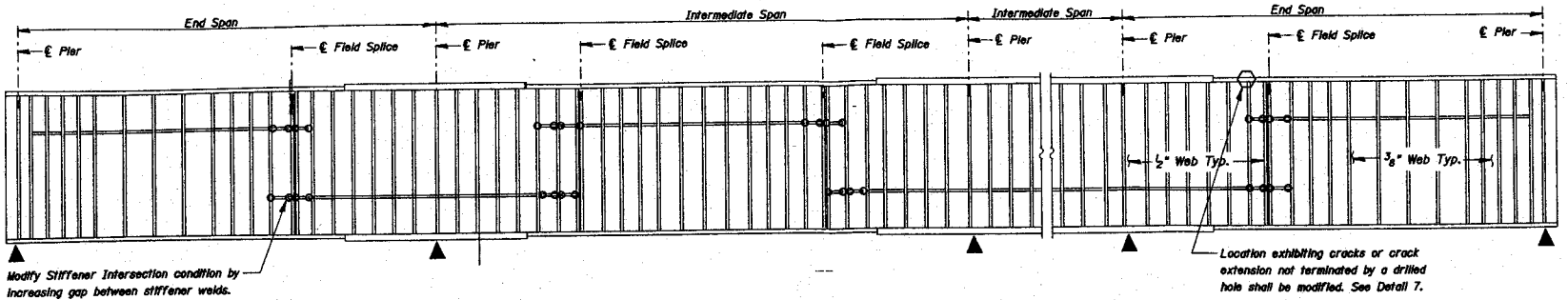

RECEIVED
JUL 02 200
BRIDGE ENGIN

GIRDER ELEVATION INDICATING TYPICAL FRACTURE CONTROL MODIFICATION LOCATIONS

APPROVED
JAN 27 2003
AS A BASIS FOR
PREPARATION OF DETAILED PLANS

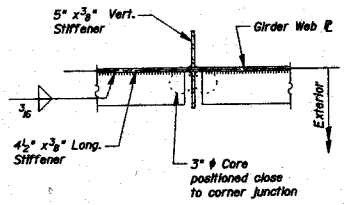

DETAIL 5 - STIFFENER INTERSECTION MODIFICATION

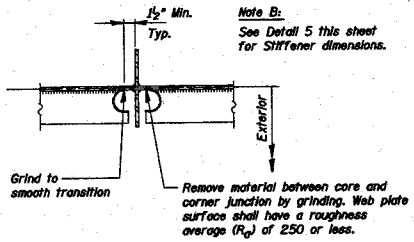

DETAIL 6 - STIFFENER INTERSECTION MODIFICATION

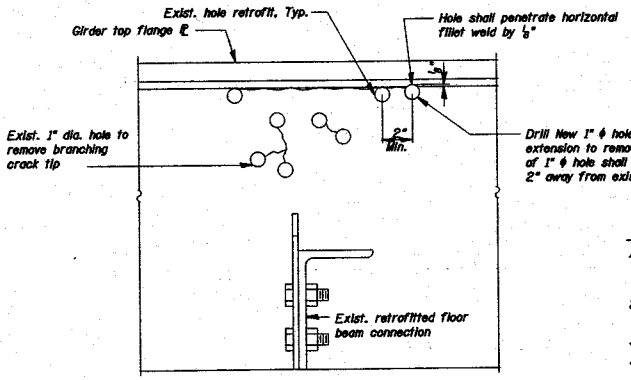

DETAIL 7 - CRACK EXTENSION RETROFIT AT FIRST INTERIOR FLOOR BEAM

Procedure for Details 5 & 6:

1. Core 3" or 4" diameter holes positioned close to corner junction through ⅜" thick longitudinal stiffener as shown in Detail 5.
2. Remove material between core and intersection junction by grinding with carbide tools and a dye grinder as shown in Detail 6. Web plate surface shall have a roughness average (R_a) of 250 or less.
3. Remove all burrs from cut edge and check for irregularities. Cored surface shall have an R_a equal to 500 or less.
4. After burr removal the modification shall be inspected using magnetic particle (MT) methods. Notify Engineer if a crack is detected. (cost included with stiffener intersection modification).
5. The exposed steel surfaces shall be cleaned and painted using an aluminum epoxy mastic primer.
6. Obtain approval of Engineer before proceeding.
7. Paint area with top coat.

Procedure for Detail 7:

1. Inspect girder web plate in region of existing retrofits to determine location of crack extension and crack tip using magnetic particle ins (MT) methods. (Cost included with crack extension retrofit at pier)
2. Drill 1" ϕ hole at end of crack extension to remove crack tip. Center of 1" ϕ hole shall be positioned in accordance with Detail 7.
3. Cored surfaces shall have a Roughness Average (R_a) of 500 or less
4. Re-inspect area using MT methods to verify crack does not extend i the newly drilled holes.
5. Obtain approval of Engineer.
6. Clean exposed steel surface to remove contaminants and paint with epoxy mastic primer.

FATIGUE RETROFIT QUANTITIES

WORK ITEM	QUANTITY
STIFFENER INTERSECTION MODIFICATION	200 each

DESIGNED	NGH / JCM
CHECKED	HH
DRAWN	TCS
CHECKED	SH

20
EXAMINED
ENGINEER OF BRIDGE DESIGN
PASSED
ENGINEER OF BRIDGES AND STRUCTURES

TYPICAL FATIGUE RETROFIT MODIFIC
POPLAR STREET BRIDGE APPROAC
F.A.I. ROUTE 70 - SECTION 82-3HVB
ST. CLAIR COUNTY
STRUCTURE NO. 082-0146 (RAMP