APPROVED

Conditionally Approved MAR 1 0 2003

STATE OF ILLINOIS
DEPARTMENT OF TRANSPORTATION

AS A BASIS FOR
PREPARATION OF DETAILED PLANS

ROUTE NO.	SECTION	COUNTY	TOTAL SHEETS	SHEET NO.
F.A.P. 999	81-1B	ST. CLAIR		
FED. ROAD DIST. NO. 7	ILLINOIS	FED. AID PROJECT		

SHEET NO. 1
2 SHEETS

Bench Mark #1 : Top of Fire Hydrant 150' Rt. of Frontage St. on Packers Rd. - Elev. 423.42
Bench Mark #2 : Iron Pin ⊙ 77.69' Lt. of Sta. 16+85.56 - Elev. 413.98

Existing Structure: None

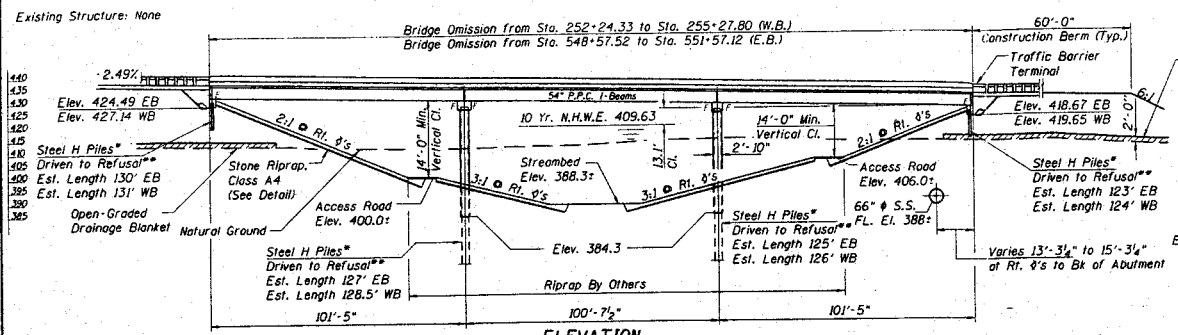

ELEVATION

* (HP12 Min.) with Metal Pile Shoes
** Based on 12 Ksi Loading

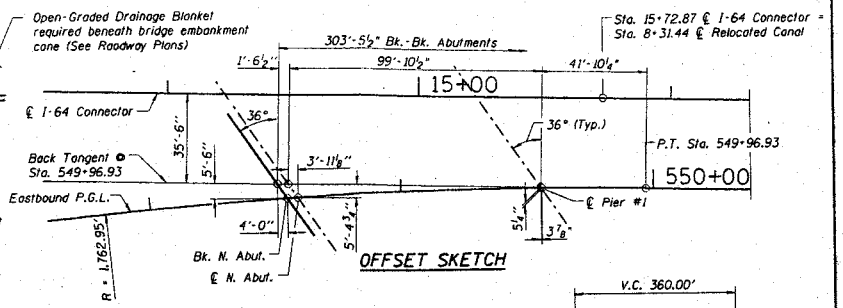

OFFSET SKETCH

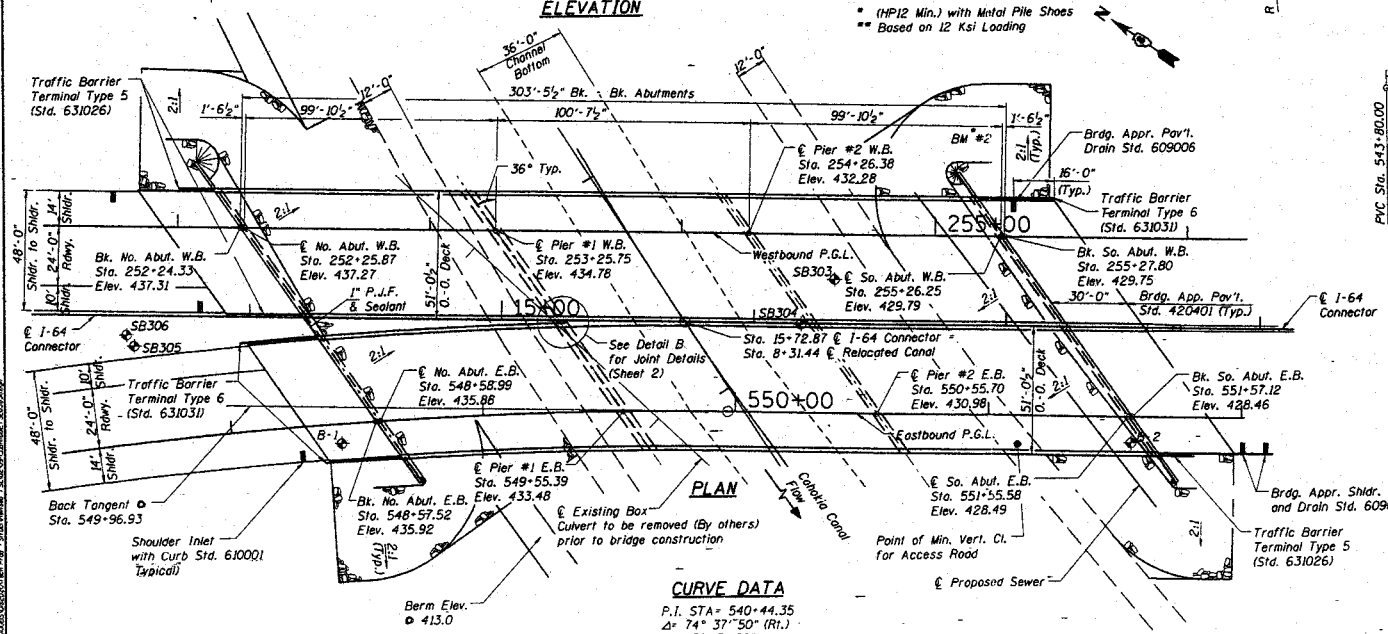

PLAN

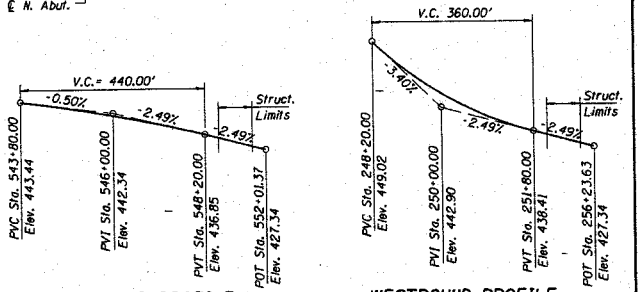

EASTBOUND PROFILE

WESTBOUND PROFILE

℄ I-64 Connector Sta. 17+94.65 = P.O.T. Sta. 256+23.63 W.B.
℄ I-64 Connector Sta. 17+94.65 = P.O.T. Sta. 552+01.37 E.B.

DESIGN SPECIFICATIONS

1996 AASHTO with 1997, 1998, 1999, 2000 and 2002 Interims

LOADING HS20-44 & ALT.

Allow 50 psf for future wearing surface.

DESIGN STRESSES

FIELD UNITS

f'c = 3,500 psi
fy = 60,000 psi (reinf.)

PRECAST PRESTRESSED UNITS

f'c = 6,000 psi
f'ci = 5,000 psi
f's = 270,000 psi (1/2"ϕ low lax strands)
f'si = 201,960 psi (1/2"ϕ low lax strands)

HIGHWAY CLASSIFICATION

FAP Rte. 999 - I-64/Connector
Functional Class: Trunk
ADT: 45,640 (2020)
DHV: 5152 (2020)
Design Speed: 60 m.p.h.

SEISMIC DATA

Seismic Performance Category (SPC) = B
Bedrock Acceleration Coefficient (A) = 0.12g
Site Coefficient (S) = 1.5

CURVE DATA

P.I. STA= 540+44.35
Δ= 74° 37'50" (Rt.)
D= 03° 15' 00"
R= 1,762.95'
T= 1,343.75'
L= 2,296.33'
E= 453.73'
S.E.= 0.0585'/ft.
P.C. STA= 527+00.60
P.T. STA= 549+96.93
S.R. = 309.0'
T.R. = 42.0'
Remove S.E. - from Sta. 549+31.26 to Sta. 552+82.26

WATERWAY INFORMATION

Drainage Area = 90 Sq. Mi. Low Grade Elev. 428.5 ⊙ Sta. 551+57.1

Flood	Freq. Yr. ①	Q C.F.S. ②	Opening Sq. Ft. Exist.	Opening Sq. Ft. Prop.	Nat. H.W.E.	Head-Ft. Exist.	Head-Ft. Prop.	Headwater El. Exist. ③	Headwater El. Prop. ④
Overtop	10	4200	N/A	1841	407.6	N/A	0.1	410.0	407.7
Design	50	4200	N/A	1841	407.6	N/A	0.1	410.0	407.7
Base	100	4200	N/A	1841	407.6	N/A	0.1	410.0	407.7
Max. Calc.	500	4200	N/A	1841	407.6	N/A	0.1	410.0	407.7

10 Year Velocity through Prop. Bridge = 2.3 fps

① The overtopping event represents overtopping of the spoil banks. The capacity of the canal has been estimated by the Corp. of Engineers to be approximately a 10 year frequency event. Flows from events larger than the 10 year event overtop the canal spoil banks several miles upstream of this structure and go into storage. Thus discharges from events larger than this do no appear at the structure.

② This discharge has been estimated from an existing condition backwater analysis (HEC-RAS model). This discharge approximates a stage that could be conveyed through the canal without significant losses of flow due to overtopping of spoil banks.

③ Highwater estimated at existing NS railroad bridge along existing canal alignment.

④ Proposed canal alignment and new bridges will result in a water surface elevation lower than the existing condition.

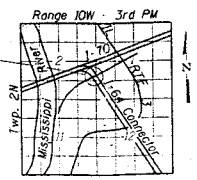

LOCATION SKETCH

GENERAL PLAN
I-64 CONNECTOR OVER CAHOKIA CANAL
F.A.P. ROUTE 999 - SECTION 81-1B
ST. CLAIR COUNTY
STATION 15+72.87
S.N.082-0383 (EB) & S.N.082-0384 (WB)

0152020
03/01/02

APPROVED

Conditionally Approved

MAR 1 0 2003

STATE OF ILLINOIS
DEPARTMENT OF TRANSPORTATION

AS A BASIS FOR
PREPARATION OF DETAILED PLANS

ROUTE NO.	SECTION	COUNTY	TOTAL SHEETS	SHEET NO.
F.A.P. 999	81-1B	ST. CLAIR		2 SHEETS
FED. ROAD DIST. NO. 7	ILLINOIS	FED. AID PROJECT		

SHEET NO. 2

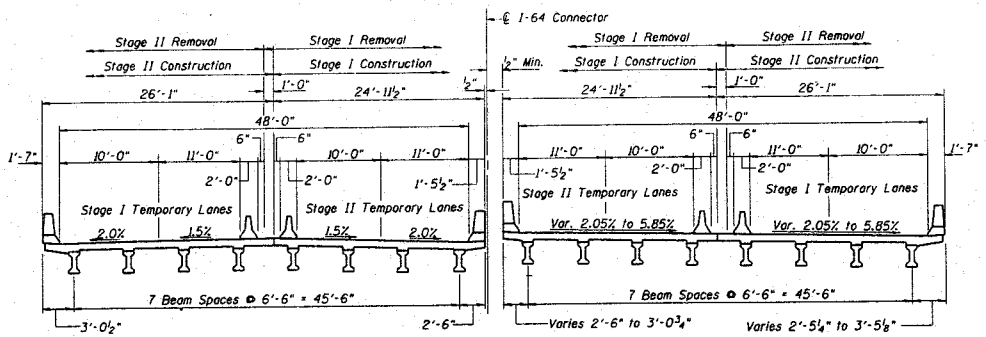

CROSS SECTION SHOWING FUTURE STAGING
(Looking South)
(For Information Only)

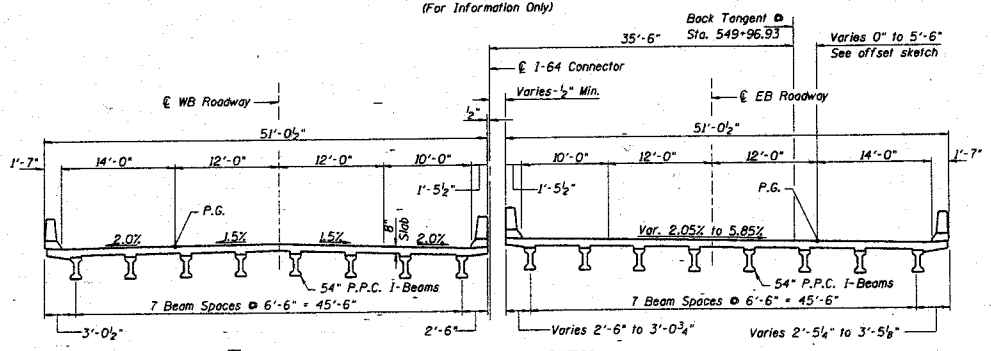

TYPICAL CROSS SECTION
(Looking South)

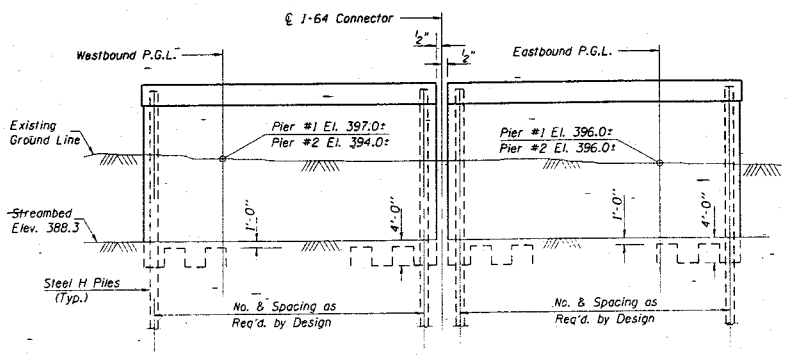

PIER SKETCH
(Looking South)

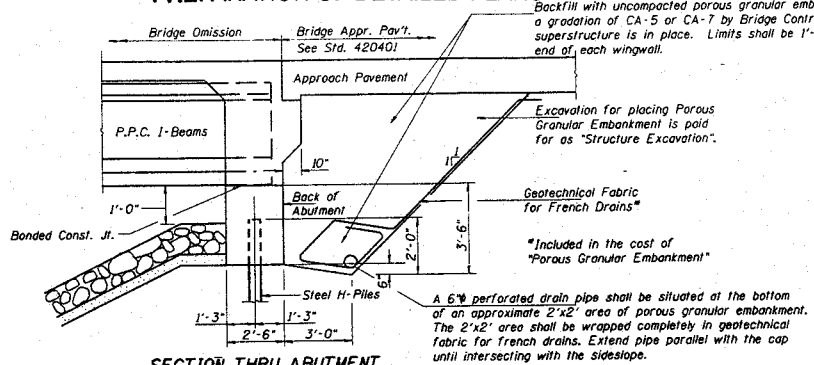

SECTION THRU ABUTMENT
(Dimensions are @ Rt. 9's to the back of abutment)

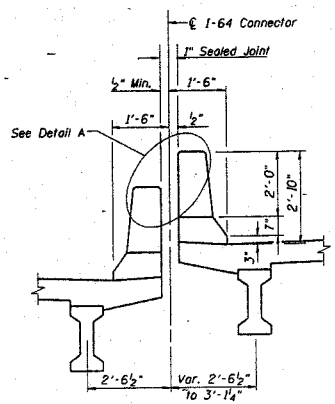

MEDIAN PARAPET DETAIL

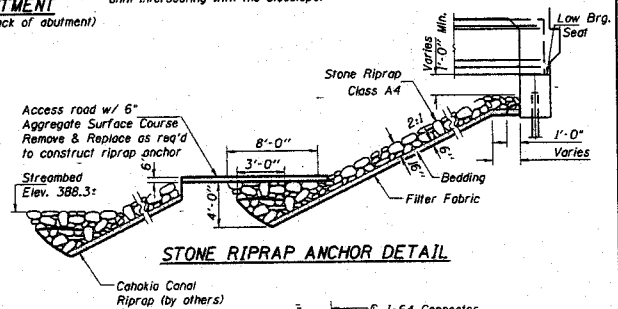

STONE RIPRAP ANCHOR DETAIL

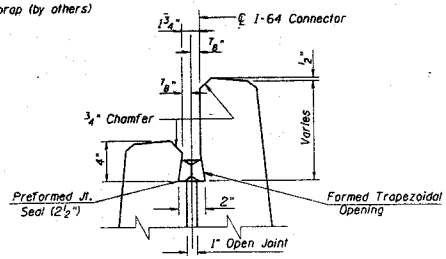

DETAIL A

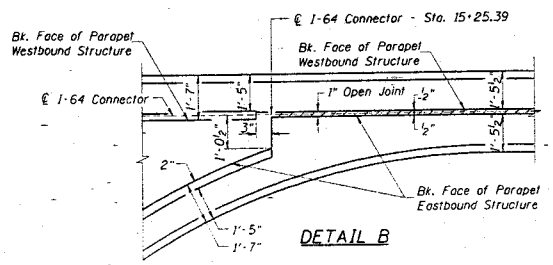

DETAIL B

DETAILS
I-64 CONNECTOR OVER CAHOKIA CANAL
FAP ROUTE 999 - SECTION 81-1B
ST. CLAIR COUNTY
STATION 15+72.87
S.N.082-0383 (EB) & S.N.082-0384 (WB)

JOB NO. 0152020
DATE 01/01/02