Bench Mark: Chiseled "□" N.W. corner of concrete slab for gaging station, Elev. 416.656

Existing Structure: S.N. 082-0089; Built in 1933 as S.B.I. Route 156, Section 106-B. Existing structure is a 4-span reinforced concrete T-beam superstructure on closed abutments and solid wall piers keyed into bedrock. The structure is 212'-0" Bk. to Bk. abuts. The structure was widened in 1971 with 2 additional PPC-deck beams on each side to its current width of 35'-0" O. to O. of deck. Traffic to be maintained utilizing stage construction.

No salvage

STATE OF ILLINOIS
DEPARTMENT OF TRANSPORTATION

SHEET NO. 1
SHEETS

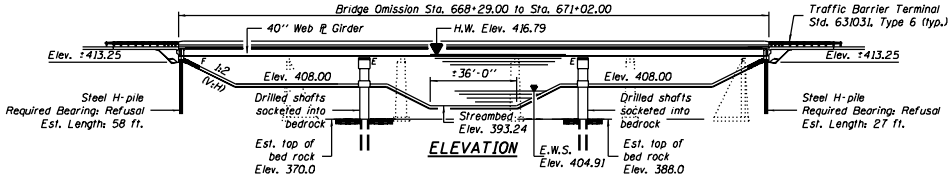

ELEVATION

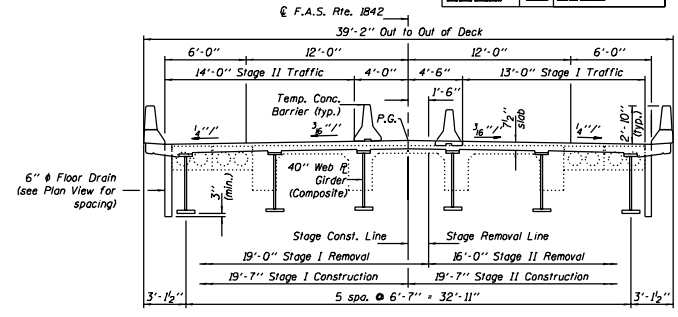

CROSS SECTION
(Looking East)

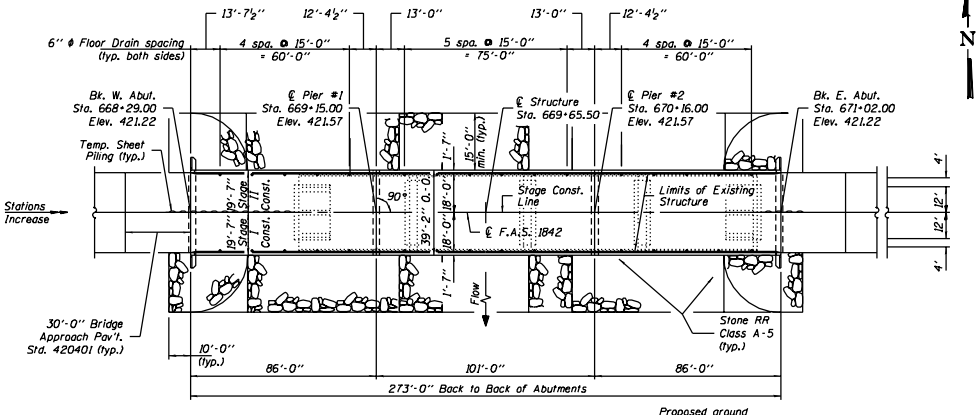

PLAN

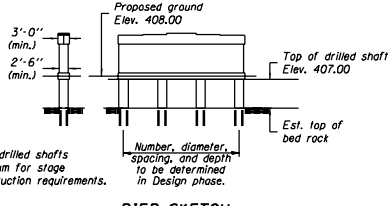

Note: Four drilled shafts minimum for stage construction requirements.

PIER SKETCH

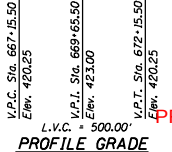

PROFILE GRADE

APPROVED
AS A BASIS FOR
PREPARATION OF DETAILED PLANS
AUG 26 2002

HIGHWAY CLASSIFICATION

F.A.S. Rte. 1842 - Il. Rte. 156
Functional Class: Major Collector
ADT: 2,800 (2000); 4,000 (2020)
DHV: 308
Design Speed: 60 m.p.h.
Posted Speed: 55 m.p.h.

LOADING HS20-44

Allow 50#/sq. ft. for future wearing surface.

DESIGN SPECIFICATIONS

1996 AASHTO with 1997, 1998, 1999, 2000 & 2002 Interims

DESIGN STRESSES

FIELD UNITS
f'_c = 3,500 psi
f_y = 60,000 psi (reinforcement)
f_y = 50,000 psi (structural steel)

SEISMIC DATA

Seismic Performance Category (SPC) = B
Bedrock Acceleration Coefficient (A) = 12.0%g
Site Coefficient (S) = _

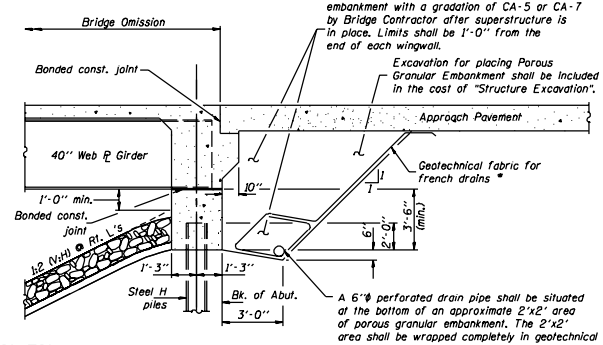

* - Included in the cost of "Porous Granular Embankment".

SECTION THRU INTEGRAL ABUTMENT

WATERWAY INFORMATION

Drainage Area = 129.4 sq. mi Low Grade Elev. 418.95 @ Sta. 676+84

Flood	Freq. Yr.	Q C.F.S.	Opening Sq. Ft. Exist.	Opening Sq. Ft. Prop.	Nat. H.W.E.	Head - Ft. Exist.	Head - Ft. Prop.	Headwater El. Exist.	Headwater El. Prop.
Design	50	15800	1444.16	2332.63	416.79	2.54	1.10	419.33	417.89
Base	100	17800	1444.16	2332.63	417.81	2.04	1.59	419.85	419.40
Ex. Overtop	35	14366	1444.16	2233.74	416.32	2.62	1.11	418.94	417.43
Pr. Overtop	60	16265	1444.16	2332.63	417.55	2.20	1.40	419.75	418.95

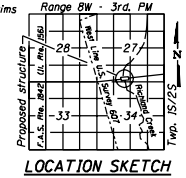

LOCATION SKETCH

GENERAL PLAN
ILLINOIS ROUTE 156 OVER
RICHLAND CREEK
F.A.S. ROUTE 1842 - SECTION 106BR
ST. CLAIR COUNTY
STATION 669+65.50
STRUCTURE NO. 082-0387

DESIGNED	M.D. Copp
CHECKED	
DRAWN	W.D. Collins
CHECKED	M.K. Christensen

20
EXAMINED
ENGINEER OF BRIDGE DESIGN
PASSED
ENGINEER OF BRIDGES AND STRUCTURES

8-26-02

D-98-141-98