APPROVED

Conditionally Approved

MAR 1 2 2002

STATE OF ILLINOIS
DEPARTMENT OF TRANSPORTATION

F.A.P. RTE.	SECTION	COUNTY	TOTAL SHEETS	SHEET NO.
999	81-2, 82R	ST. CLAIR	2	1
STA.		TO STA.		
FED. ROAD DIST. NO. 8	ILLINOIS	FED. AID PROJECT		

Bench Mark: R.R. Spike in P.P. North East Quad of Bowman & 9TH Street.

Existing Structure: None

AS A BASIS FOR PREPARATION OF DETAILED PLANS

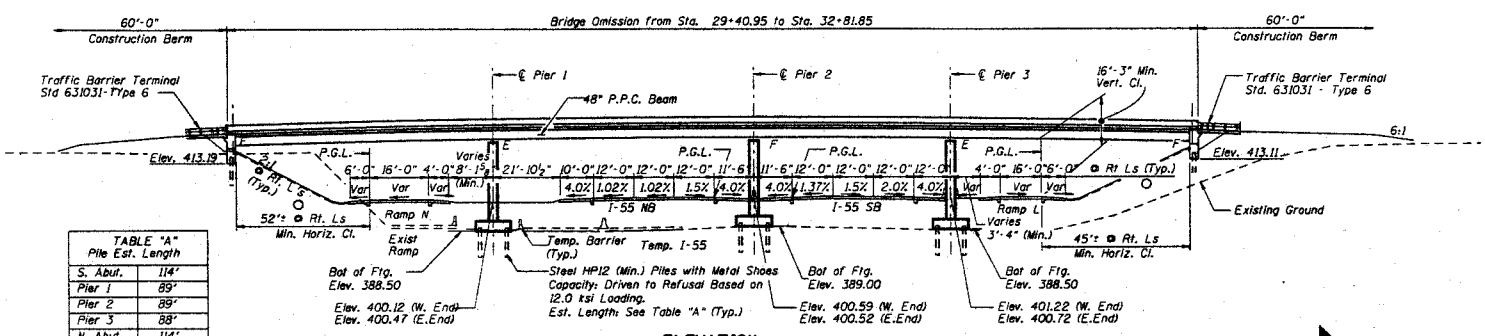

TABLE "A" Pile Est. Length	
S. Abut.	114'
Pier 1	89'
Pier 2	89'
Pier 3	88'
N. Abut.	114'

ELEVATION

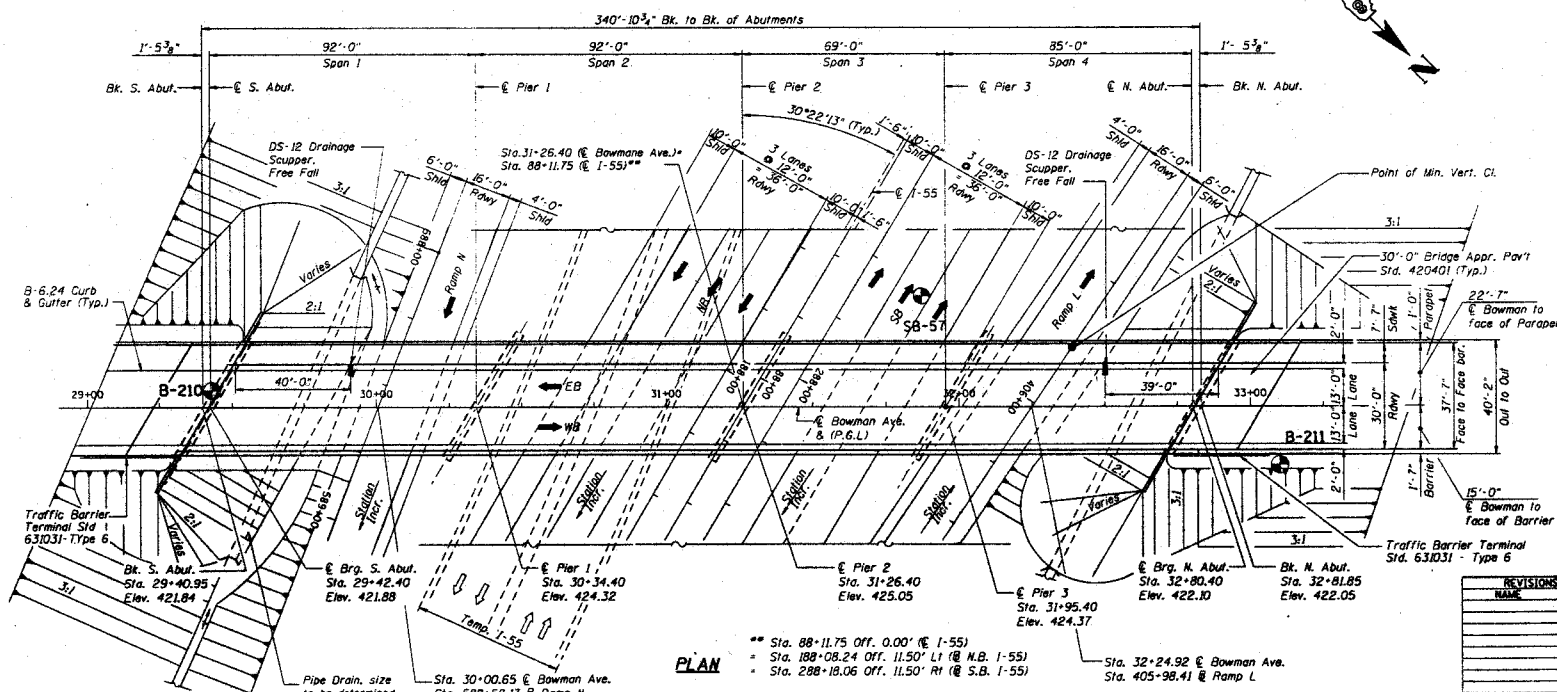

PLAN

DESIGN SPECIFICATIONS

SHTO With 1997, 1998,1999 & 2000 Interims

DESIGN STRESSES

EIELD UNITS

f'c = 3,500 psi
fy = 60,000 psi (reinf.)

PRECAST PRESTRESSED UNITS

f'c = 6,000 psi
f'ci = 5,000 psi
f's = 270,000 psi (½"ϕ Low Relaxation Strands)
f'si = 201,960 psi (½"ϕ Low Relaxation Strands)

LOADING HS20-44

Allow 50#/sq. ft. for future wearing surface

SEISMIC DATA

Seismic Performance Category (SPC) = B
Bedrock Acceleration Coefficient = 0.12 g
Site Coefficient (S) = 1.5

HIGHWAY CLASSIFICATION

Bowman Ave.	F.A.I.Route I-55
Class: Local	Class: Interstate
DHV: 55	DHV: 4,625 (2020)
ADT: 550	ADT: 57,370 (2020)
Design speed: 30 mph	Design speed: 60 mph
Ramp L	Ramp N
Class: Ramp	Class: Ramp
DHV: 11 (2020)	DHV: 11 (2020)
ADT: 110 (2020)	ADT: 110 (2020)
ADTT: 11 (2020)	ADTT: 11 (2020)
Design speed: 30 mph	Design speed: 30 mph

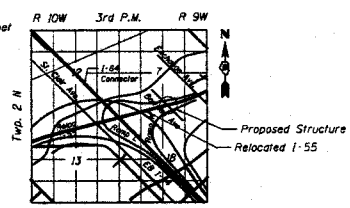

LOCATION SKETCH

REVISIONS NAME	DATE

ILLINOIS DEPARTMENT OF TRANSPORTATION

GENERAL PLAN
BOWMAN AVE. OVER I-55
F.A.I. ROUTE 55 SECTION 81-2, 82R
ST. CLAIR COUNTY
STA. 31+26.40
STRUCTURE NUMBER 082-0393

SCALE: NONE DRAWN BY: RJ
DATE: February 26, 2002 CHECKED BY: BM/ST

m:\p40281\struct\ts&l\bowman avenue\sht\bomn-tsll.sht
02/26/2002 01:32:37 PM

STATE OF ILLINOIS
DEPARTMENT OF TRANSPORTATION

F.A.P. RTE.	SECTION	COUNTY	TOTAL SHEETS	SHEET NO.
999	81-2, 82R	ST. CLAIR	2	2
STA.		TO STA.		
FED. ROAD DIST. NO. 8	ILLINOIS	FED. AID PROJECT		

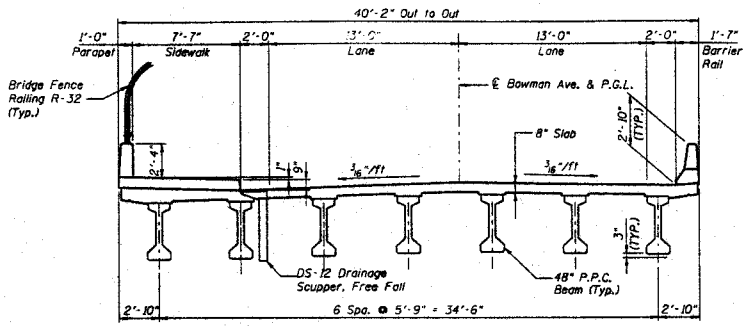

CROSS SECTION
(Looking Upstation)

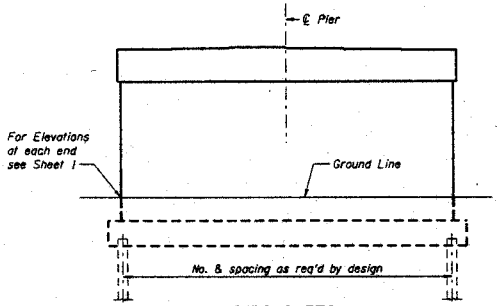

PIER SKETCH
Pier 1 to Pier 3

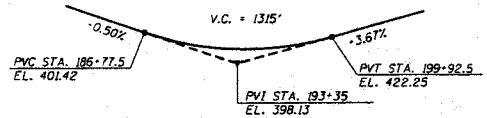

PROFILE GRADE NB I-55

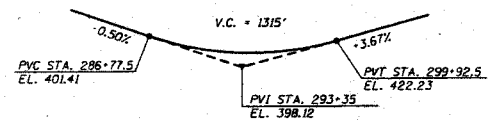

PROFILE GRADE SB I-55

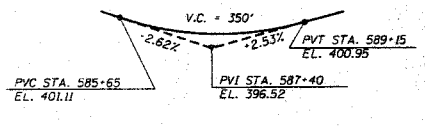

PROFILE GRADE RAMP N

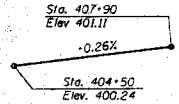

PROFILE GRADE RAMP L

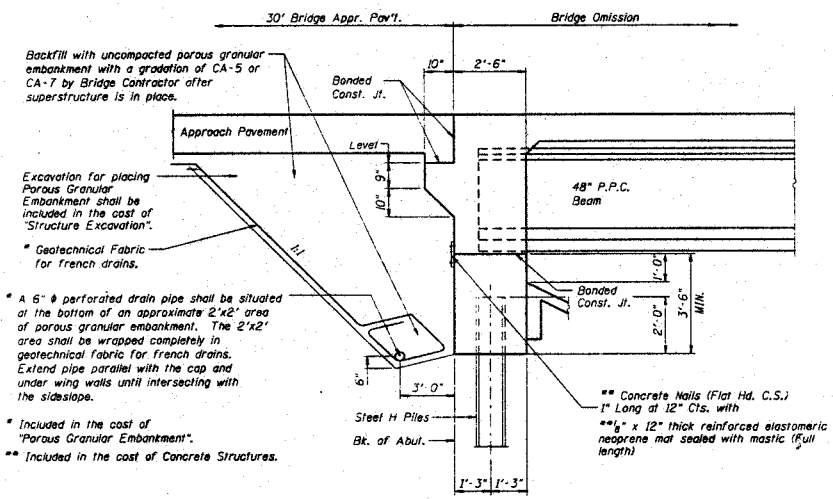

* Included in the cost of "Porous Granular Embankment".
** Included in the cost of Concrete Structures.

SECTION THRU INTEGRAL ABUTMENTS

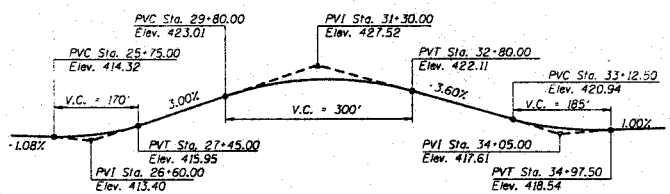

PROFILE GRADE BOWMAN AVE.

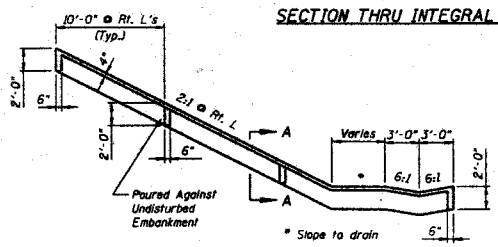

SECTION THRU SLOPEWALL

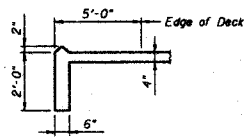

SECTION A-A

APPROVED

MAR 1 2 2002

AS A BASIS FOR
PREPARATION OF DETAILED PLANS

REVISIONS NAME	DATE

ILLINOIS DEPARTMENT OF TRANSPORTATION

GENERAL PLAN
BOWMAN AVE. OVER I-55
F.A.I. ROUTE 55 SECTION 81-2, 82R
ST. CLAIR COUNTY
STA. 31+26.40
STRUCTURE NUMBER 082-0393

SCALE: NONE DRAWN BY: RJ
DATE: February 26, 2002 CHECKED BY: RDP

m:\g48281\struct\ts&l\bowman avenue\sht\bomn-ts12.sht
02/26/2002 01:32:38 PM