Bench Mark: Top of ROW marker SW corner of intersection with Knollwood Road. Elev. 573.01.

Existing Structure: S.N. 084-0025 built 1959 as F.A.I. Route 55 (Service Road). Section 84-2B-1 at Station 291+20.00. Structure consists of 3 span continuous steel WF beams with reinforced concrete deck supported by spill thru abuts. and hammerhead piers. 150'-0¼" back-to-back abutments. 30'-8" out-to-out deck. Concrete deck to be removed and replaced. Road to be closed and traffic detoured during construction.

No salvage

STATE OF ILLINOIS
DEPARTMENT OF TRANSPORTATION

APPROVED
AS A BASIS FOR
PREPARATION OF DETAILED PLANS
OCT 01 2003

SHEET NO. 1
1 SHEET

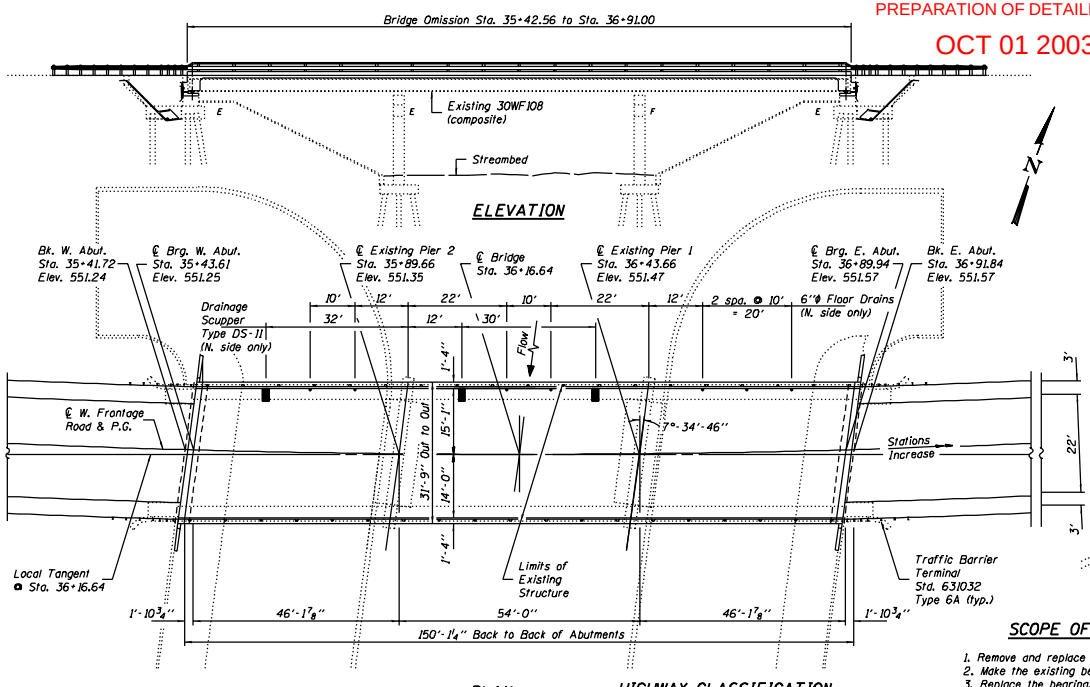

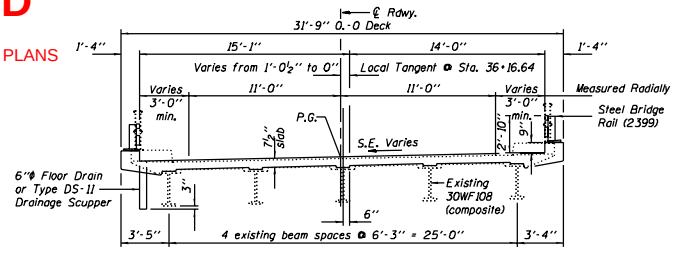

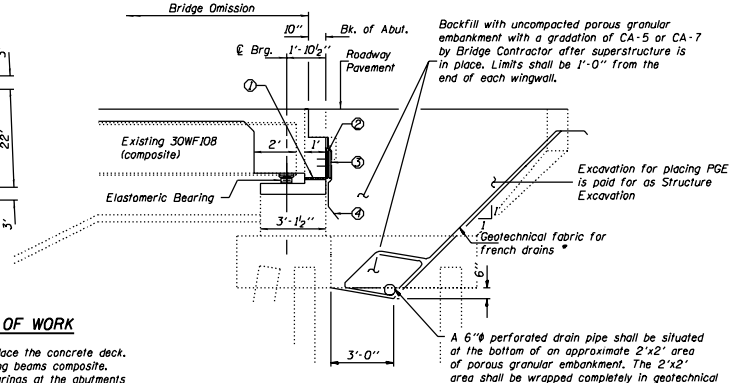

SCOPE OF WORK

1. Remove and replace the concrete deck.
2. Make the existing beams composite.
3. Replace the bearings at the abutments with elastomeric bearings. all other bearings to be reused.
4. Modify the abutments to semi-integral type. No approach pavement allowed.

HIGHWAY CLASSIFICATION

West Frontage Road - F.A.I. Rte. 55 (Service Road)
Functional Class: Local Road (Non-Urban)
ADT: 1000 (1999); 1250 (2023)
ADTT: 4.0%
Design Speed: 55 m.p.h.
Posted Speed: 55 m.p.h.

CURVE DATA

(℄ of West Frontage Road)
P.I. Sta. = 36+63.35
Δ = 5°-18'-52.3"
D = 2°-7'-9.7"
R = 2,703.44'
T = 125.47'
L = 250.76'
E = 2.91'
P.C. Sta. = 35+37.88
P.C.C. Sta. = 37+88.64
S.E. = 2.5%
Attained from Sta. 32+20.25 To Sta. 36+21.47

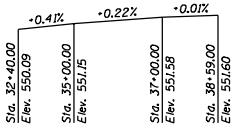

PROFILE GRADE

(along ℄ roadway)

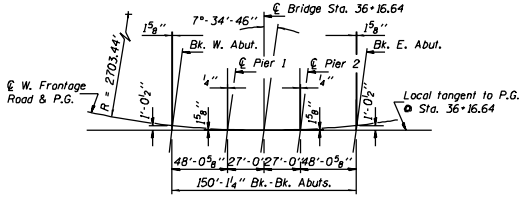

LOADING HS20-44

Allow 25 psf for future wearing surface.

DESIGN SPECIFICATIONS

2002 AASHTO

DESIGN STRESSES

FIELD UNITS (New Const.)
f'_c = 3,500 psi
f_y = 60,000 psi (reinforcement)

SEISMIC DATA

Seismic Performance Category (SPC) = A
Bedrock Acceleration Coefficient (A) = 4.8%g
Site Coefficient (S) = 1.2

SECTION THRU SEMI-INTEGRAL ABUT.

(Horizontal dimensions @ Rt. L's)

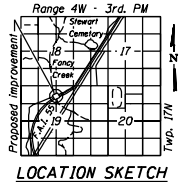

GENERAL PLAN
WEST FRONTAGE ROAD OVER
FANCY CREEK
F.A.I. ROUTE 55 - SEC. (84-2B-1)I-1
SANGAMON COUNTY
STATION 36+16.64
STRUCTURE NO. 084-0025

DESIGNED	G.G. Eicher
CHECKED	A.Y. Vinson
DRAWN	W.D. Collins
CHECKED	M.D. Cima

20
EXAMINED
ENGINEER OF BRIDGE DESIGN
PASSED
ENGINEER OF BRIDGES AND STRUCTURES