B.M. DC #1 - Chisel "□" in top hubguard N.E. Corner of Bridge
Sta. 217+00, 20.3' Lt.
Elev. = 605.05

EXISTING STRUTURE: No 084-0090 built in 1933 as single span reinforced concrete slab bridge. 32'-0" bk to bk of abutment. 40'-0" clear width. 42'-6" out of out width.

Road to be Closed during Construction.

No salvage.

STATE OF ILLINOIS
DEPARTMENT OF TRANSPORTATION

APPROVED
APR 20 2009
AS A BASIS FOR
PREPARATION OF DETAILED PLANS

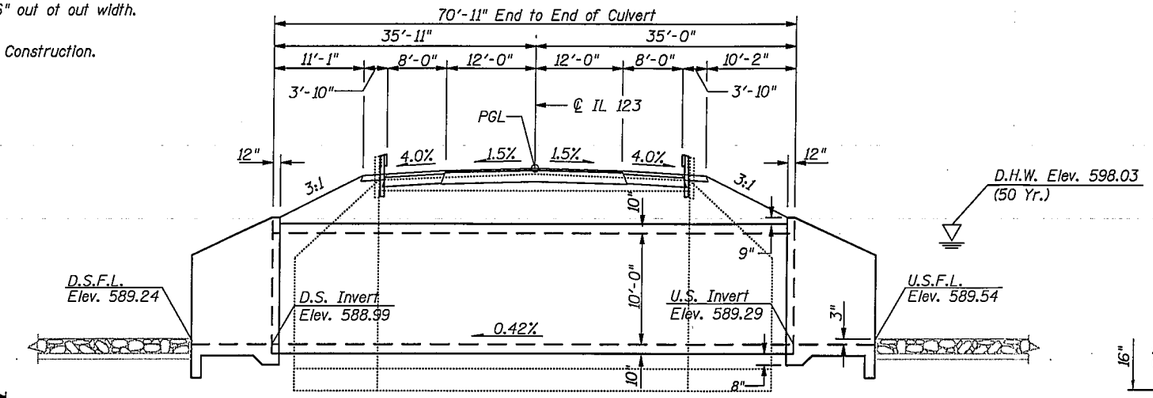

LONGITUDINAL SECTION

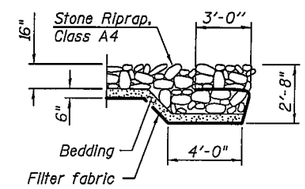

SECTION A-A

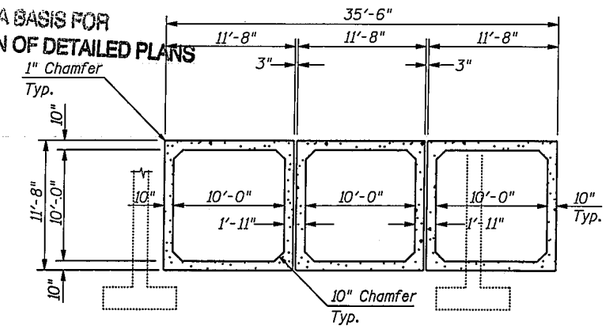

SECTION THRU BARREL

* Slab thickness may be refined during final design.

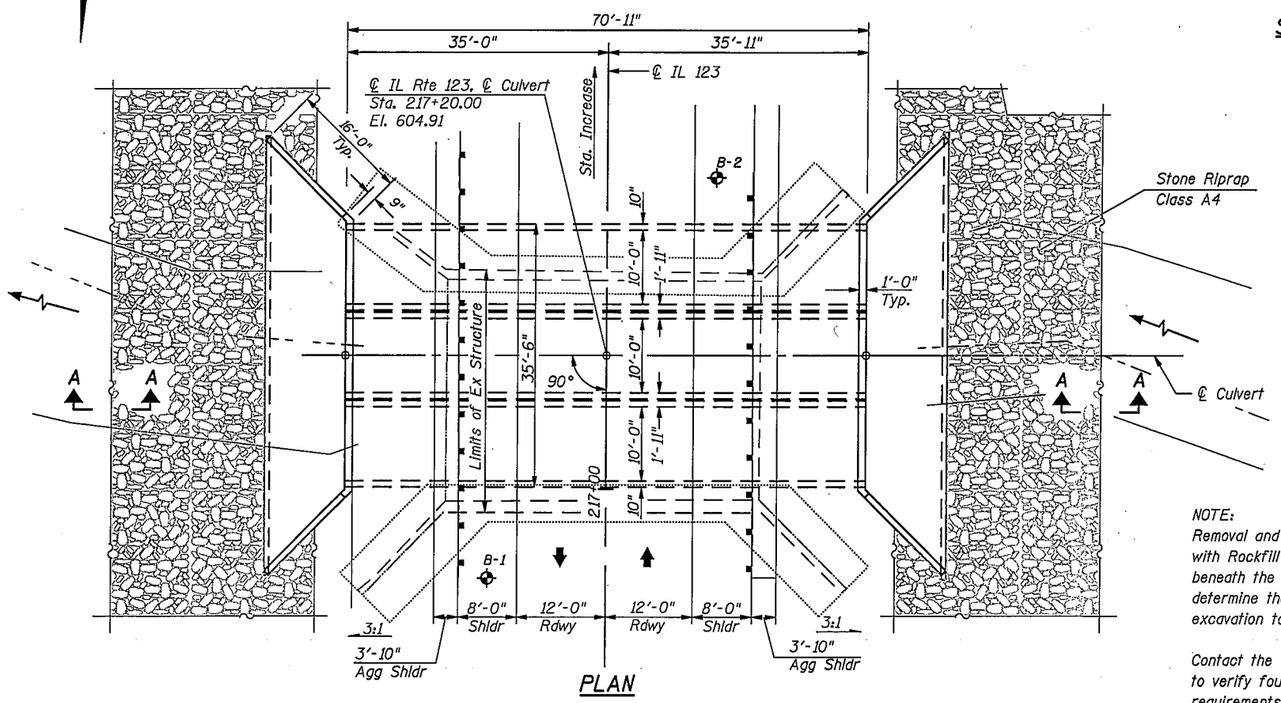

PLAN

DESIGN SCOUR ELEVATION TABLE

DESIGN SCOUR ELEVATION (FT.)	US INVERT	DS INVERT
	585.29	584.99

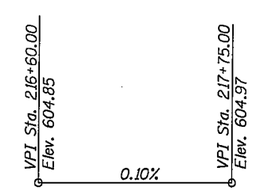

PROFILE GRADE LINE
(along ℄ roadway)

NOTE:
Removal and replacement of weak soils with Rockfill Foundation may be required beneath the culvert. The engineer will determine the required depth following excavation to plan grade.

Contact the District Geotechnical Engineer to verify foundation conditions meet plan requirements.

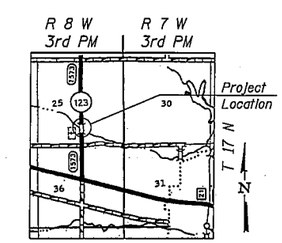

LOCATION SKETCH

LOADING HS 20-44

Allow 50#/sq. ft. for future wearing surface.

HIGHWAY CLASSIFICATION

F.A.S Rte. 1573 - (IL Rte. 123)
Functional Class: Major Collector
ADT: 1,100 (2005); 1400 (2022)
ADTT: 125 (2005)
Design Speed: 60 m.p.h.
Posted Speed: 55 m.p.h.

DESIGN STRESSES

FIELD UNITS

f'c = 3,500 psi
fy = 60,000 psi (Reinforcement)
Allow. Bearing Pressure = 3.1 ksf

PRECAST UNITS

AASHTO M259

DESIGN SPECIFICATIONS

2002 AASHTO Standard Specifications for Highway Bridges, 17th Edition

GENERAL PLAN
F.A.S. ROUTE 1573 (IL 123)
OVER RICHLAND CREEK
SECTION 108 (B-2)
SANGAMON COUNTY
STA. 217+20.00
STRUCTURE NO. 084-2522

WATERWAY INFORMATION

Drainage Area = 4.06 sq. mi. Low Grade Elev. 604.64 - ℄ Sta. 217+75

Flood	Freq. Yr.	Q C.F.S.	Opening Sq. Ft. Exist.	Opening Sq. Ft. Prop.	Nat. H.W.E.	Head - Ft. Exist.	Head - Ft. Prop.	Headwater El. Exist.	Headwater El. Prop.
	10	760	175	255	597.75	0.73	0.67	598.48	598.42
Design	50	1250	212	292	598.97	1.09	2.40	600.06	601.37
Base	100	1470	226	300	599.46	1.24	3.48	600.70	602.94
Overtopping									
Max. Calc.	500	2010	259	300	600.54	1.58	4.65	602.12	605.19

DESIGNED	DBR
CHECKED	SCD
DRAWN	THW
CHECKED	-

SHEET NO.	F.A.S. RTE.	SECTION	COUNTY	TOTAL SHEETS	SHEET NO.
SHEETS	1573	108(B-2)	SANGAMON	-	
			CONTRACT NO. 72999		
	FED. ROAD DIST. NO. _	ILLINOIS	FED. AID PROJECT		

$FILE$