Bench Mark: BM chiseled on the NW wingwal of S.N. 088-0017. Elevation = 707.77

Existing Structure: S.N. 088-0017 Built in 1932 as S.B.I.-93, Section 107-B at Station 85+27. The structure is a single span reinforced concrete slab bridge supported on timber pile closed abutments 20 ft. Bk. to Bk. The existing structure is to be removed and replaced. The traffic will be detoured during construction.

No salvage

STATE OF ILLINOIS
DEPARTMENT OF TRANSPORTATION

SHEET NO. 1
1 SHEET

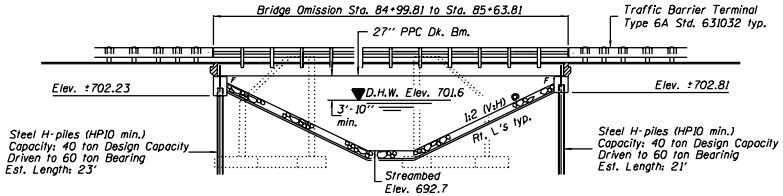

ELEVATION

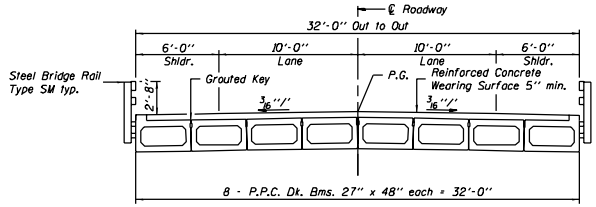

CROSS SECTION

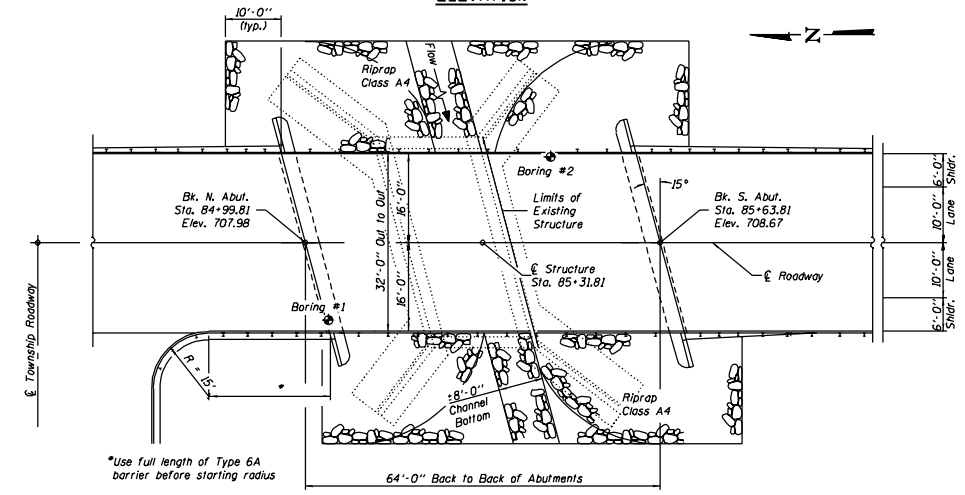

PLAN

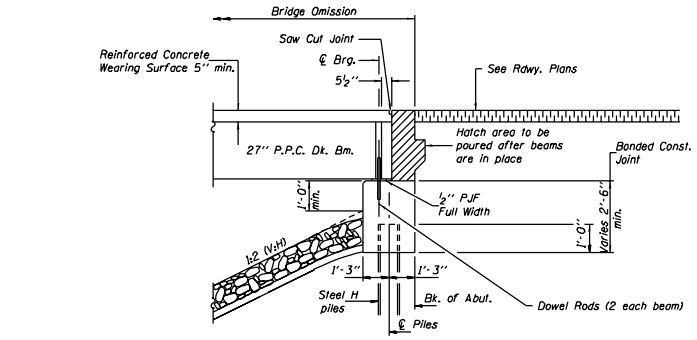

SECTION THRU ABUTMENT
(Dimensions @ Rt. L's)

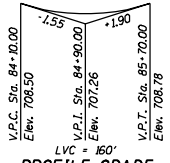

PROFILE GRADE
(along ℄ roadway)

HIGHWAY CLASSIFICATION

F.A.S. Rte. 2244
Functional Class: Major Collector (rural)
ADT: 250 (1996); 335 (2014)
Design Speed: 55 m.p.h.
Posted Speed: 55 m.p.h.

LOADING HS20-44

Allow 50#/sq. ft. for future wearing surface.

DESIGN SPECIFICATIONS

2002 AASHTO

DESIGN STRESSES

FIELD UNITS

f'_c = 3500 psi
f_y = 60000 psi (reinforcement)

PRECAST PRESTRESSED UNITS

f'_c = 5000 psi
f'_{ci} = 4000 psi
f'_s = 270000 psi (½"Φ low lax. strands)
f_s = 189,000 psi (½"Φ low lax strands)

SEISMIC DATA

Seismic Performance Category (SPC) = A
Bedrock Acceleration Coefficient (A) = 3.8%g
Site Coefficient (S) = 1.2

APPROVED
AS A BASIS FOR
PREPARATION OF DETAILED PLANS
JUN 16 2003

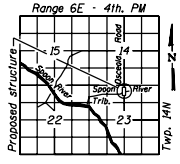

LOCATION SKETCH

GENERAL PLAN
OSCEOLA ROAD OVER
SPOON RIVER TRIBUTARY
F.A.S. ROUTE 2244 - SECTION (107B)BR
STARK COUNTY
STATION 85+31.81
STRUCTURE NO. 088-0029

DESIGNED	C.J. Fuesting
CHECKED	R.J. Chaput
DRAWN	W.D. Collins
CHECKED	A. Siudyla

EXAMINED 20
ENGINEER OF BRIDGE DESIGN
PASSED
ENGINEER OF BRIDGES AND STRUCTURES

WATERWAY INFORMATION

Drainage Area = 2.33 Sq. Mi. Low Grade Elev. 707.9 @ Sta. 84+68

Flood	Freq. Yr.	0 C.F.S.	Opening Sq. Ft. Exist.	Opening Sq. Ft. Prop.	Nat. H.W.E.	Head - Ft. Exist.	Head - Ft. Prop.	Headwater El. Exist.	Headwater El. Prop.
	10	682	141	216	701.3	0.1	0.0	701.4	701.3
Design	20	839	146	229	701.6	0.2	0.0	701.8	701.6
Base	100	1302	159	262	702.3	0.8	0.0	703.1	702.3
Overtopping	-	-	-	-	-	-	-	-	-
Max. Calc.	500	1769	169	290	702.9	1.7	0.0	704.6	702.9

3-7-03

D-94-040-00

* D-94-040-99