Bench Mark: Chiseled " " on the N.W. wingwall of S.N. 090-0086 Elev. 628.74

Existing Structure: S.N. 090-0086 Built in 1917, as Route 9 Section 8A & 8B, at Station 319+00.
The structure consists of a single span reinforced concrete slab bridge supported on closed abutments.
20 ft. Bk. to Bk. abutments. 32 ft. O.-O. The structure is to be removed and replaced.
One lane of traffic will be maintained with the use of traffic activated signals during stage construction.

STATE OF ILLINOIS
DEPARTMENT OF TRANSPORTATION

ROUTE NO.	SECTION	COUNTY	TOTAL SHEETS	SHEET NO.
. .	-	-		
FED. ROAD DIST. NO. 7		ILLINOIS	FED. AID PROJECT-	

SHEET NO. 1
2 SHEETS

APPROVED
AS A BASIS FOR
PREPARATION OF DETAILED PLANS
APR 06 2004

No salvage

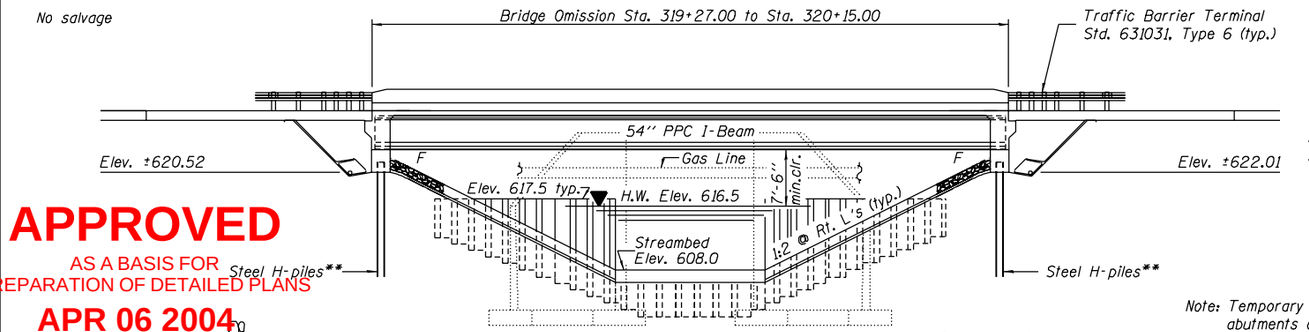

**Final foundation treatment to be determined in final design.

N

Note: Temporary brace existing abutments or excavate behind walls.

ELEVATION

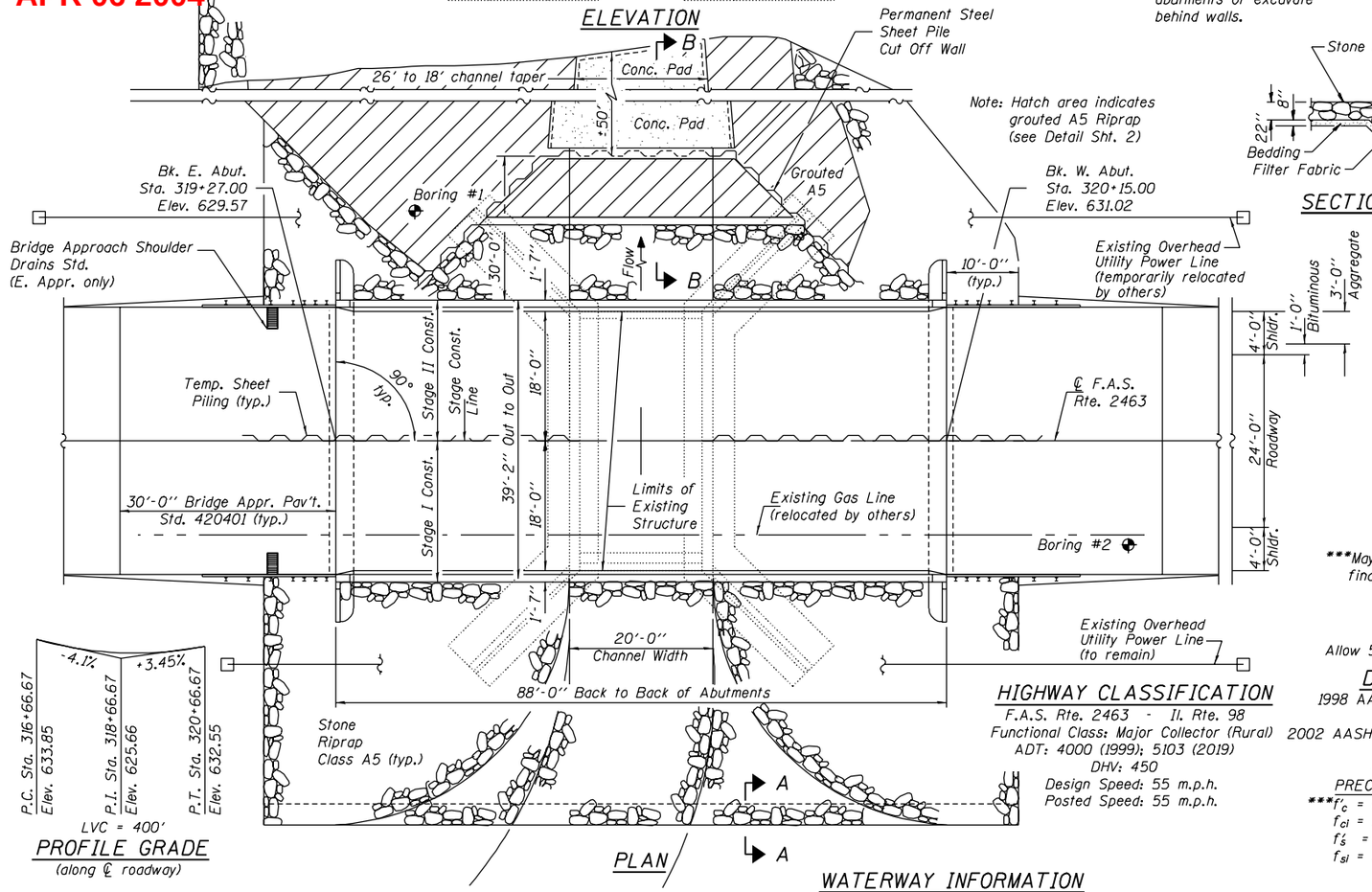

PROFILE GRADE
(along ℄ roadway)

PLAN

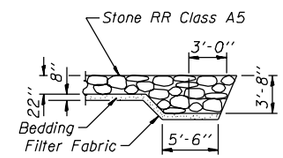

SECTION A-A

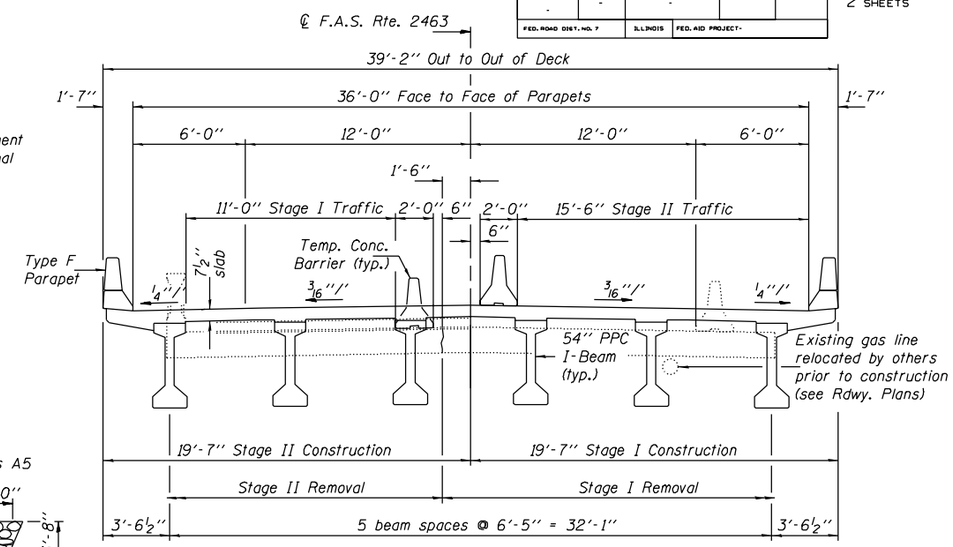

CROSS SECTION

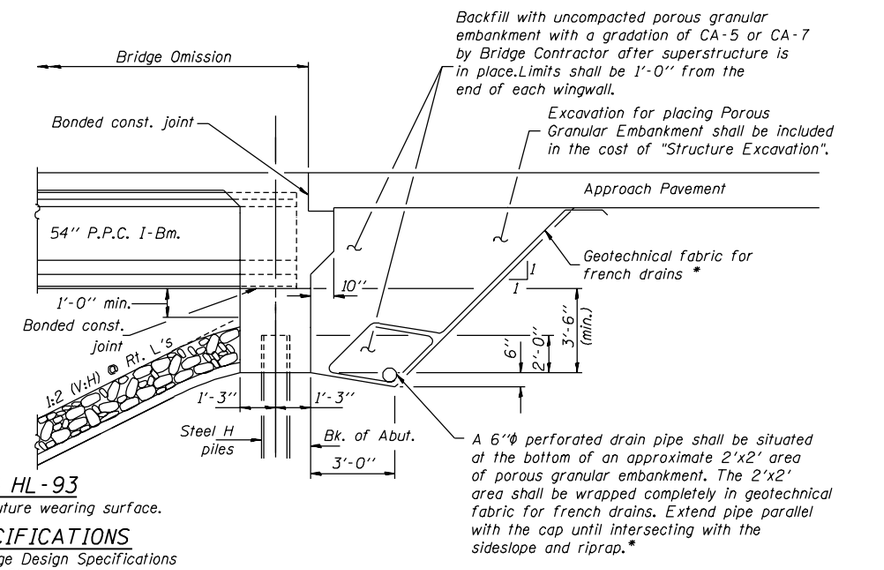

* - Included in the cost of "Porous Granular Embankment".

SECTION THRU INTEGRAL ABUTMENT

***May be refined in final design

LOADING HL-93
Allow 50#/sq. ft. for future wearing surface.

HIGHWAY CLASSIFICATION
F.A.S. Rte. 2463 - Il. Rte. 98
Functional Class: Major Collector (Rural)
ADT: 4000 (1999); 5103 (2019)
DHV: 450
Design Speed: 55 m.p.h.
Posted Speed: 55 m.p.h.

DESIGN SPECIFICATIONS
1998 AASHTO LRFD Bridge Design Specifications with 1999 thru 2003 Interims.
2002 AASHTO Division I-A Seismic Design Specifications

DESIGN STRESSES

PRECAST PRESTRESSED UNITS
***f'_c = 6,000 psi
f_{ci} = 5,000 psi (reinforcement)
f'_s = 270,000 psi (½" Φ low lax strands)
f_{si} = 201,960 psi (½" Φ low lax strands)

FIELD UNITS
f'_c = 3,500 psi
f_y = 60,000 psi

SEISMIC DATA
Seismic Performance Category (SPC) = A
Bedrock Acceleration Coefficient (A) = 4.3%g
Site Coefficient (S) = 1.0

WATERWAY INFORMATION

Drainage Area = 1.36 mi.² Low Grade Elev. 628.4 @ Sta. 319+00

Flood	Freq. Yr.	Q C.F.S.	Opening Sq. Ft. Exist.	Opening Sq. Ft. Prop.	Nat. H.W.E.	Head - Ft. Exist.	Head - Ft. Prop.	Headwater El. Exist.	Headwater El. Prop.
	10	720	120	132	614.6	1.4	1.4	616.0	616.0
Design	50	1220	158	170	616.5	2.0	2.0	618.5	618.5
Base	100	1440	172	184	617.2	2.3	2.3	619.5	619.5
Max. Calc.	500	1990	202	263	618.7	2.9	2.9	621.6	621.6

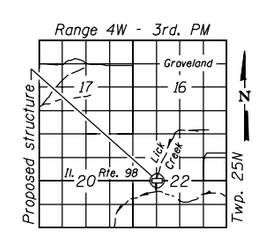

LOCATION SKETCH

GENERAL PLAN
IL. ROUTE 98 OVER
LICK CREEK
F.A.S. ROUTE 2463 - SECTION (B)BR-4
TAZEWELL COUNTY
STATION 319+71
STRUCTURE NO. 090-0173

DESIGNED	- C.J. Fuesting
CHECKED	- R.J. Chaput
DRAWN	- W.D. Collins
CHECKED	- A. Siudyla

- 20
EXAMINED
ENGINEER OF BRIDGE DESIGN
PASSED
ENGINEER OF BRIDGES AND STRUCTURES

STATE OF ILLINOIS
DEPARTMENT OF TRANSPORTATION

ROUTE NO.	SECTION	COUNTY	TOTAL SHEETS	SHEET NO.
-	-	-		
FED. ROAD DIST. NO. 7		ILLINOIS	FED. AID PROJECT-	

SHEET NO. 2
2 SHEETS

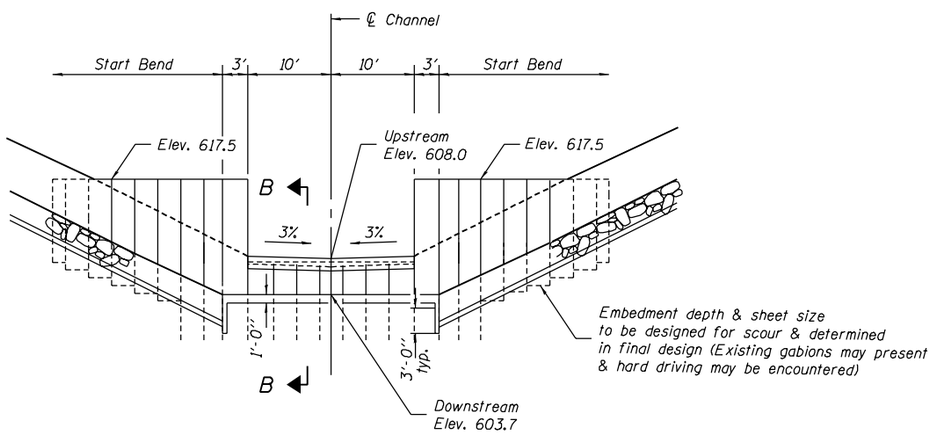

ELEVATION OF CUT OFF WALL
(Looking Upstream)

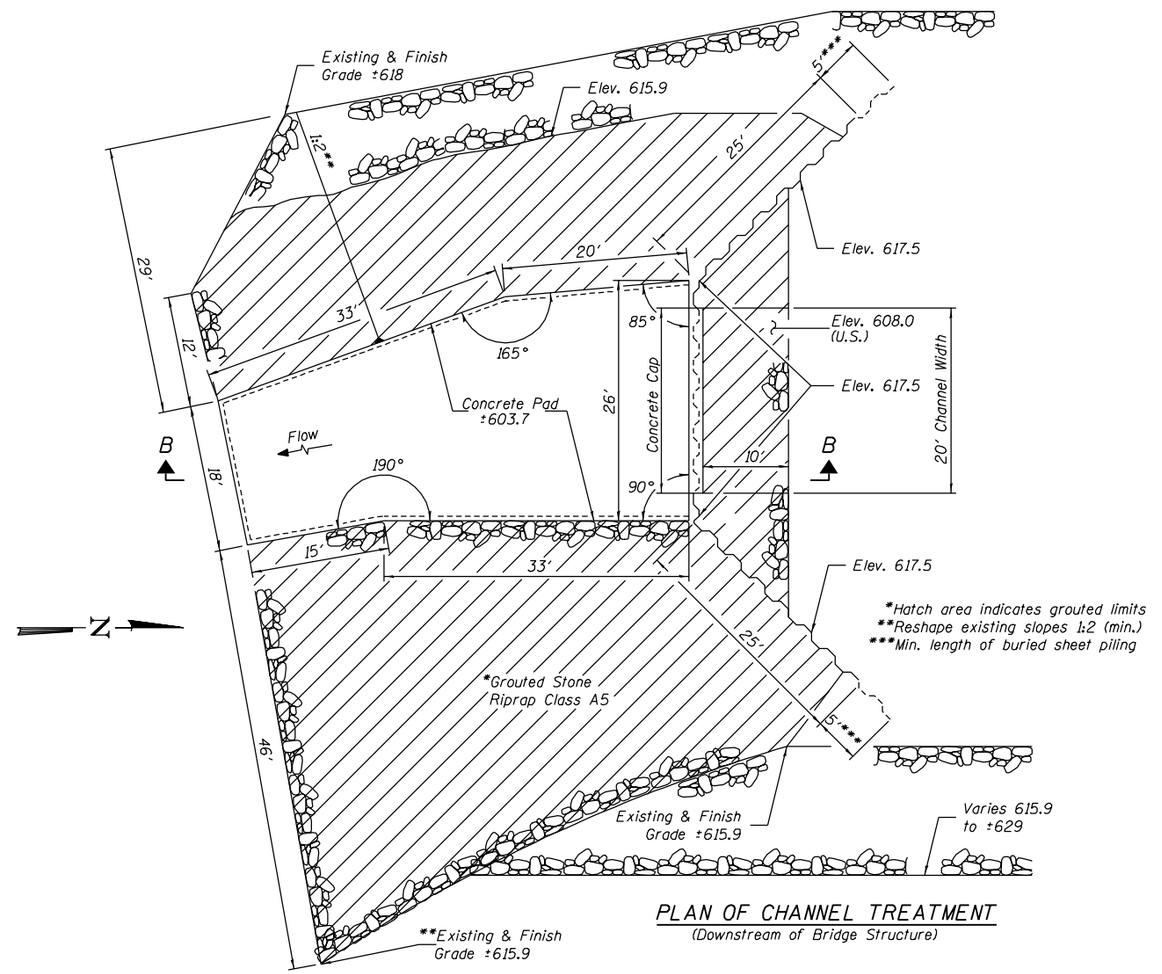

PLAN OF CHANNEL TREATMENT
(Downstream of Bridge Structure)

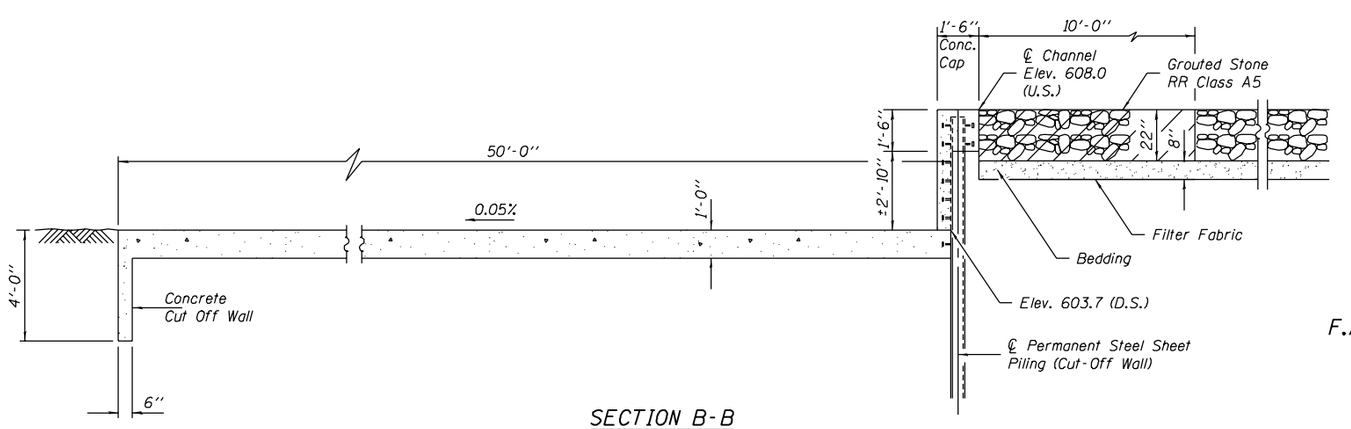

SECTION B-B

DESIGNED	- C.J. Fuesting
CHECKED	- R.J. Chaput
DRAWN	- W.D. Collins
CHECKED	- A. Siudyla

EXAMINED _____ 20
ENGINEER OF BRIDGE DESIGN

PASSED
ENGINEER OF BRIDGES AND STRUCTURES

DETAILS
IL. ROUTE 98 OVER
LICK CREEK
F.A.S. ROUTE 2463 - SECTION (B)BR-4
TAZEWELL COUNTY
STATION 319+71
STRUCTURE NO. 090-0173