F.A.I. RTE.	SECTION	COUNTY	TOTAL SHEETS	SHEET NO.
55		WILL	3	1
STA.		TO STA.		
FED. ROAD DIST. NO.	ILLINOIS	FED. AID PROJECT		

BENCHMARKS:

BM 3191 Square cut on northwest edge of 2 foot diameter concrete light pole base #MC2 on south side Route 30 and about 400 feet northwest of I-55. El. 607.08

EXISTING STRUCTURES:

Existing Bridges No. 099-0016 Southbound Bridge at Sta. 587+71.51 (℄ SB Exist.) and No. 099-0017 Northbound Bridge at Sta. 587+90.13 (℄ NB Exist.) F.A.I.-55 were built in 1955 as F.A. Route 34 - Project IN-187(9), Section 27HB, widened in 1977 as U.S.30 - Project I-55-6 I-55-6(123)246 Section (99-1&2)R-5. In 1994, the concrete deck was scarified ¼" and resurfaced and the superstructure was rehabilitated as F.A.I. Section 27HB-BR(89). They are 4-span continuous non-composite wide flange beam bridges with a 6¾" concrete deck slab and 2" overlay. 41'-10" out-to-out of structure and 191'-0" Back-to-Back Abutments.

SALVAGE:

None.

STAGING:

Traffic to be maintained utilizing stage construction.

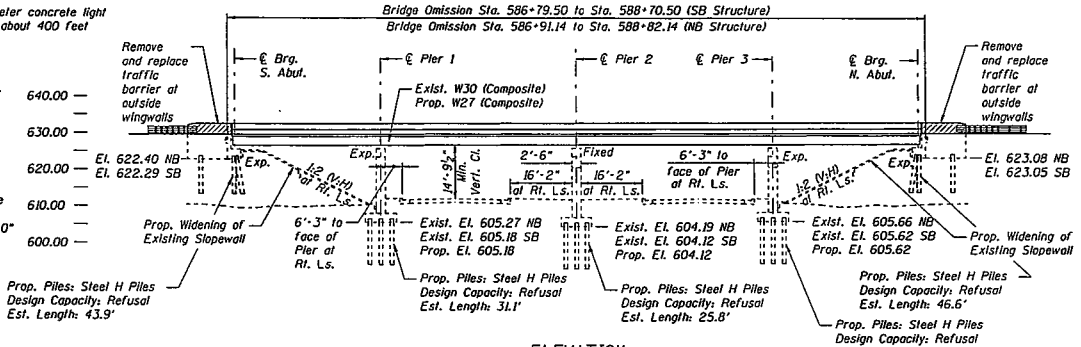

ELEVATION

DESIGN SPECIFICATIONS:

AASHTO Standard Specifications for Highway Bridges, 17th Edition, 2002

DESIGN LOADING:

HS20-44 and Alt. Military Loading
Future Wearing Surface = 50 psf

DESIGN STRESSES:

New Construction:

Concrete - f'c = 3,500 psi
Reinforcement - fy = 60,000 psi
Structural Steel - fy = 50,000 psi (M270, Gr 50)

Existing Construction:

1955 Construction (Original):
fs Structural Steel = 18,000 psi
fs Reinforcing Steel = 20,000 psi
fc Concrete = 800 psi (Abutments)
fc Concrete = 1200 psi (Piers)

1977 Construction (Widening):
fs Structural Steel = 20,000 psi
fs Reinforcing Steel = 20,000 psi
fc Concrete = 1400 psi (Substructure)

SEISMIC DATA:

Seismic Performance Category (SPC) = A
Bedrock Acceleration Coefficient (A) = 0.04g
Site Coefficient (S) = 1.0

HIGHWAY CLASSIFICATION:

F.A.I. 55

Class: Rural Freeway
ADT: 57,400 (2002), 60,000 (2030)
ADTT (MU) 16%
ADTT (SU) 4%
DHV: 2,860 (2002)
Design Speed: 65 MPH
Posted Speed: 65 MPH

U.S. ROUTE 30

Class: Urban Minor Arterial
ADT: 31,000 (2002), 38,000 (2030)
ADTT (MU) 14%
ADTT (SU) 3%
DHV: 3,800
Design Speed: 65 mph
Posted Speed: 65 mph

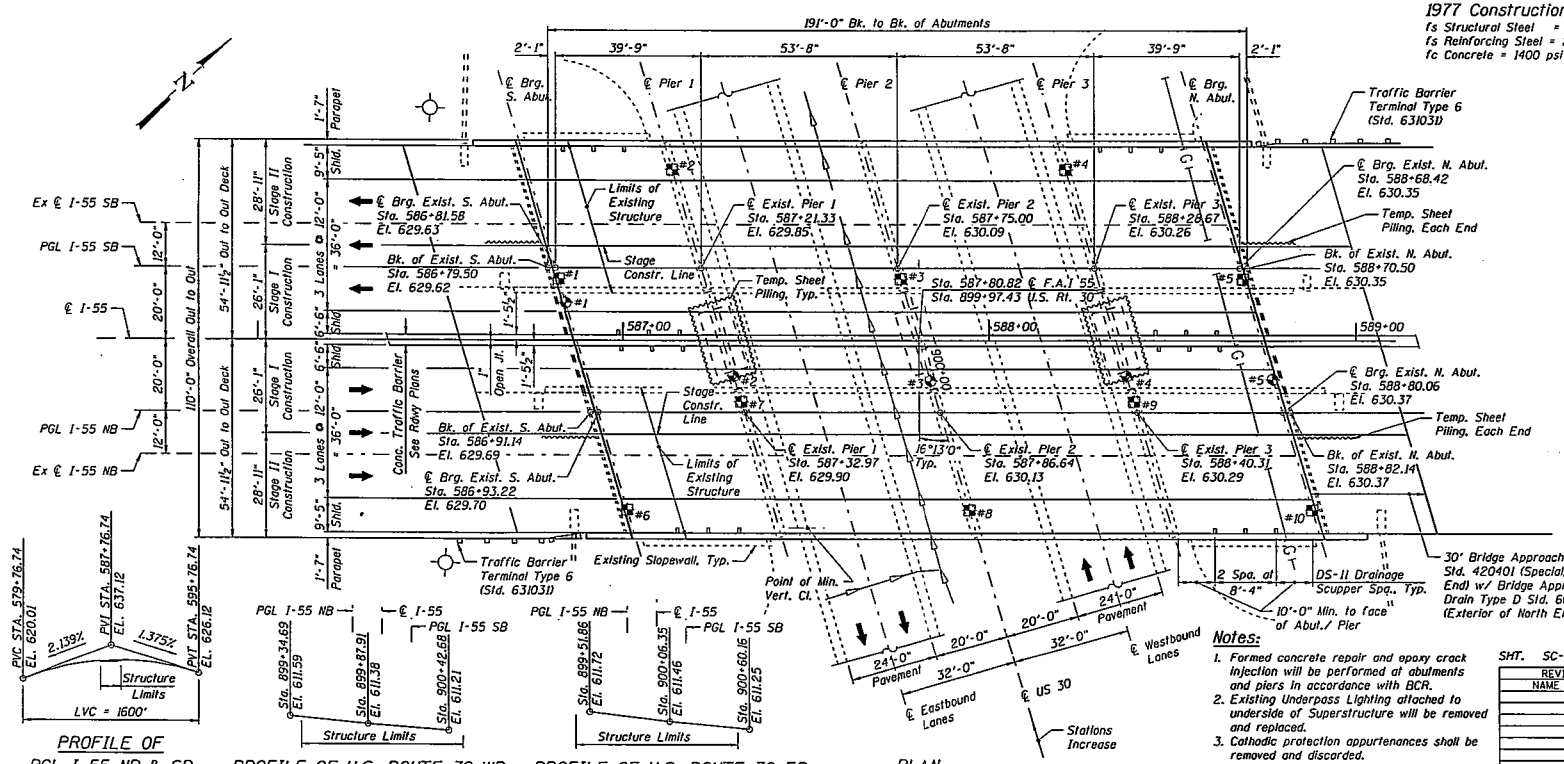

PLAN

PROFILE OF PGL I-55 NB & SB
(Developed from Survey Data)

PROFILE OF U.S. ROUTE 30 WB
(From Survey)

PROFILE OF U.S. ROUTE 30 EB
(From Survey)

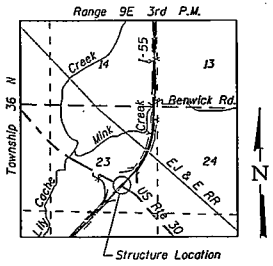

LOCATION MAP

LEGEND:

- #5 Soil Boring (1955)
- #5 Soil Boring (2006)
- Existing Storm Sewer
- Concrete Removal
- Existing Inlet
- Existing Light Pole to Remain
- Existing Gas Main
- Proposed Drainage Scupper

Notes:

1. Formed concrete repair and epoxy crack injection will be performed at abutments and piers in accordance with BCR.
2. Existing Underpass Lighting attached to underside of Superstructure will be removed and replaced.
3. Cathodic protection appurtenances shall be removed and discarded.

SHT. SC-1 OF 3

REVISIONS	
NAME	DATE

ILLINOIS DEPARTMENT OF TRANSPORTATION
FAI ROUTE 55 (I-80 TO U.S. 30)
SB & NB I-55 OVER US RTE. 30, S.N. 099-0016 & 099-0017
STA. 587+80.82, SECTION 27HB-BR(89)
WILL COUNTY

TYPE, SIZE, AND LOCATION
GENERAL PLAN & ELEVATION

SCALE: DRAWN BY PA
DATE 03/10/2006 CHECKED BY BGK

APPROVED

MAR 20 2006

AS A BASIS FOR PREPARATION OF DETAILED PLANS

F.A.I. RTE.	SECTION	COUNTY	TOTAL SHEETS	SHEET NO.
55		WILL	3	2
STA.		TO STA.		
FED. ROAD DIST. NO.	ILLINOIS	FED. AID PROJECT		

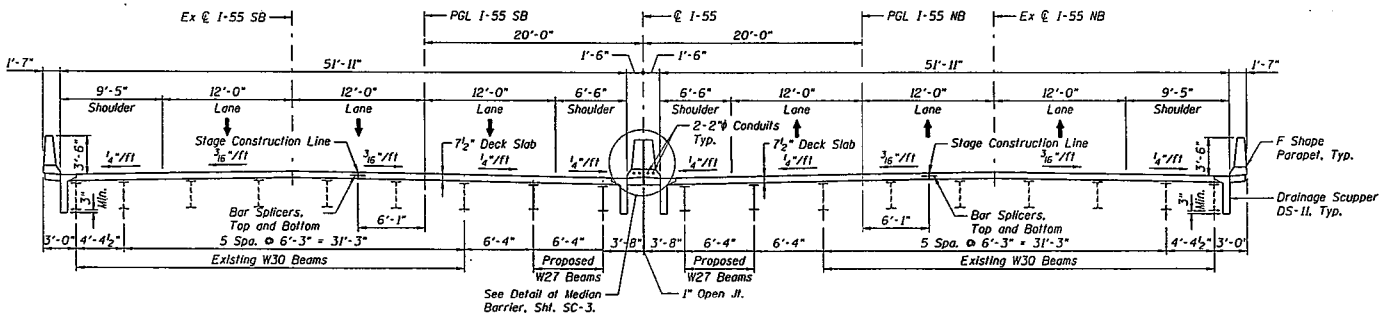

PROPOSED CROSS SECTION

(Looking North)

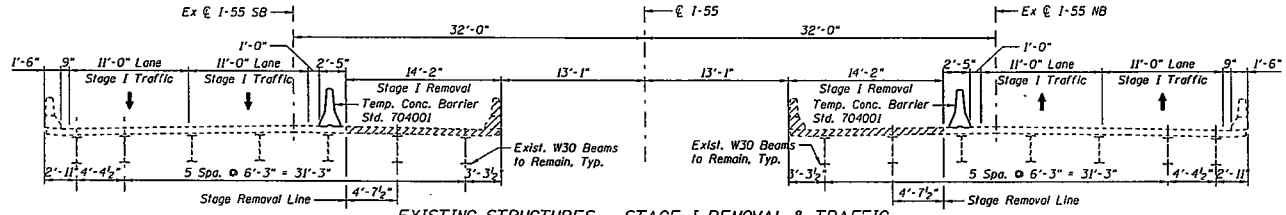

EXISTING STRUCTURES - STAGE I REMOVAL & TRAFFIC

(Looking North)

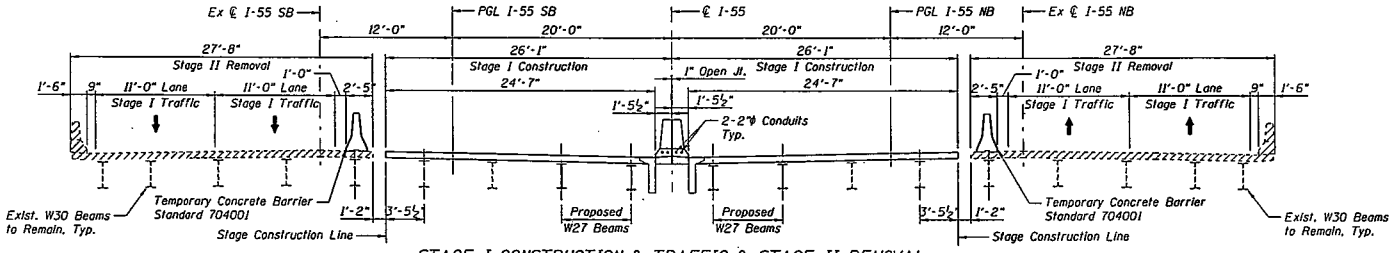

STAGE I CONSTRUCTION & TRAFFIC & STAGE II REMOVAL

(Looking North)

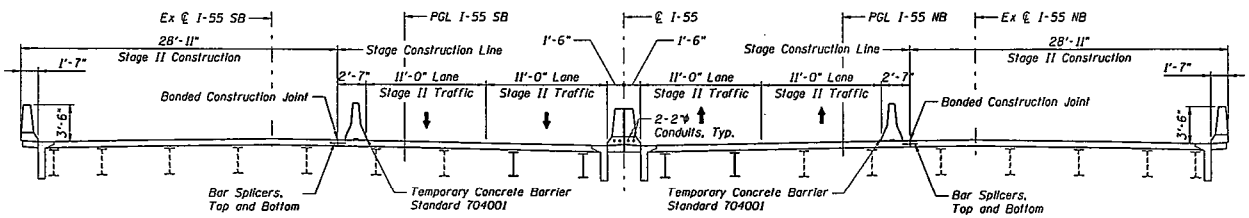

STAGE II CONSTRUCTION & TRAFFIC

(Looking North)

LEGEND:

Concrete Removal

SHT. SC-2 OF 3

REVISIONS	
NAME	DATE

ILLINOIS DEPARTMENT OF TRANSPORTATION
FAI ROUTE 55 (I-80) TO U.S. 30
SB & NB I-55 OVER US RTE. 30, SJN. 099-0016 & 099-0017
STA. 587+80.82, SECTION 27HB-BRIBSI
WILL COUNTY

TYPE, SIZE, AND LOCATION
CONSTRUCTION STAGING

SCALE:
DRAWN BY PA
DATE 03/10/2006
CHECKED BY BGK

F.A.I. RTE.	SECTION	COUNTY	TOTAL SHEETS	SHEET NO.
55		WILL	3	3
STA.		TO STA.		
FED. ROAD DIST. NO.	ILLINOIS	FED. AID PROJECT		

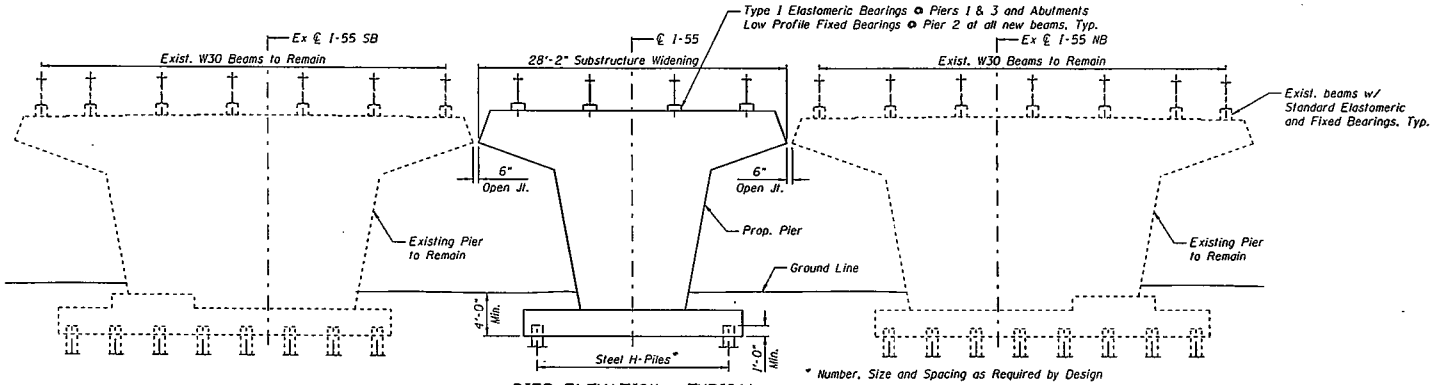

PIER ELEVATION - TYPICAL

(Looking North)
(Dimensions along ℄ of Pier)

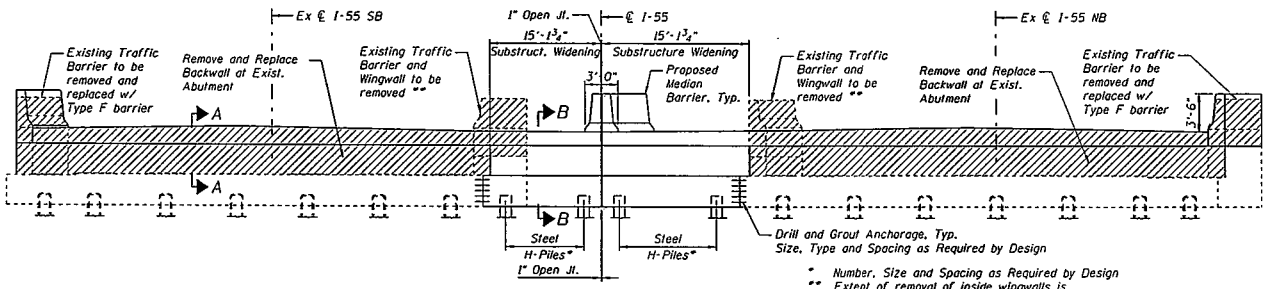

ABUTMENT ELEVATION - TYPICAL

(Looking North)
(Dimensions along ℄ of Abut.)

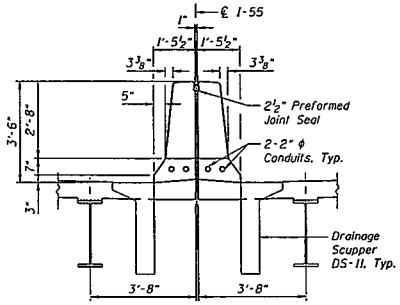

DETAIL AT MEDIAN BARRIER

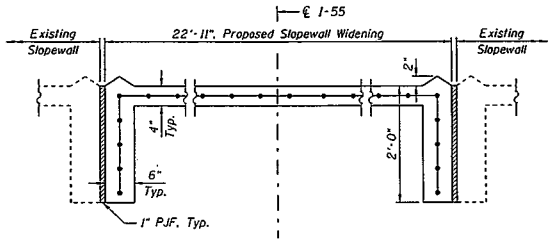

SECTION THRU SLOPEWALL

(Dimensions along ℄ of Abut.)

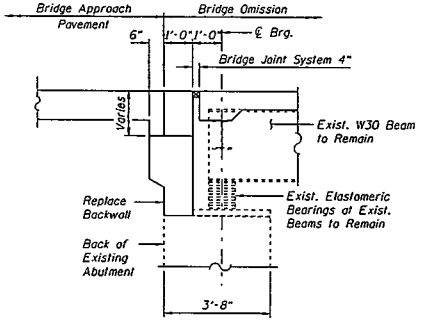

SECTION A-A THRU EXISTING ABUTMENT

(Dimensions at Rt. Angles)

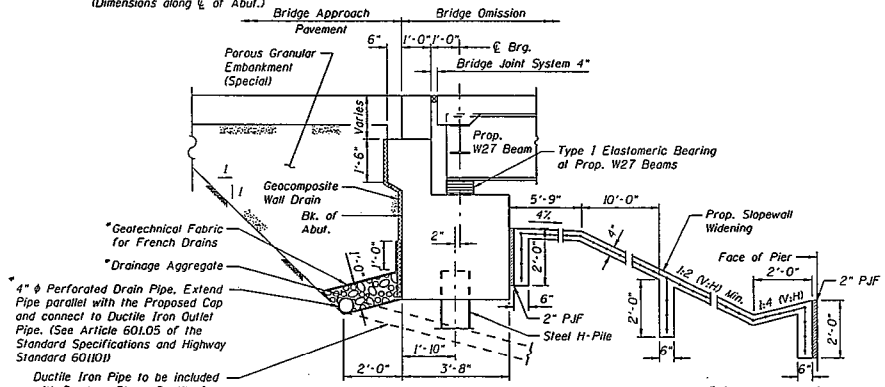

SECTION B-B THRU PROPOSED ABUTMENT

(Dimensions at Rt. Angles)

LEGEND:

Concrete Removal

SHT. SC-3 OF 3

REVISIONS	
NAME	DATE

ILLINOIS DEPARTMENT OF TRANSPORTATION
FAI ROUTE 55 (I-80 TO U.S. 30)
SB & NB I-55 OVER US RTE. 30, SAL 099-0016 & 099-0017
STA. 587+80.82, SECTION 27HB-BRIBSI
WILL COUNTY

TYPE, SIZE, AND LOCATION DETAILS

SCALE:
DATE 03/10/2006
DRAWN BY PA
CHECKED BY BGK