ROUTE NO.	SECTION	COUNTY	TOTAL SHEETS	SHEET
F.A.I. 55	99 (1 & 2) WRS-3	WILL	2	1
STA.	TO STA.			

STATE OF ILLINOIS
DEPARTMENT OF TRANSPORTATION

Benchmark: # 3245
Cut square on top of southwest abutment-wingwall corner of southbound I-55 bridge SN 099-0025
Sta. 771+69.73, 55.51' LT
Elev. = 615.67

Benchmark: # 3246
Found square cut on top of southeast corner of abutment-wingwall of northbound I-55 bridge
SN 099-0024
Sta. 773+18.43, 54.59' RT
Elev. = 615.57

Existing Structures
SN 099-0024 Northbound Structure
SN 099-0025 Southbound Structure
Built originally in 1956 as single span deck slab structures. The structures were rehabilitated in 1975 and 1995. The structures are 36'-7" long with a clear width of 34'-0½" measured parallel to the roadway centerline.

No Salvage

Staging:
Two lanes of traffic shall be maintained in each direction utilizing stage construction.

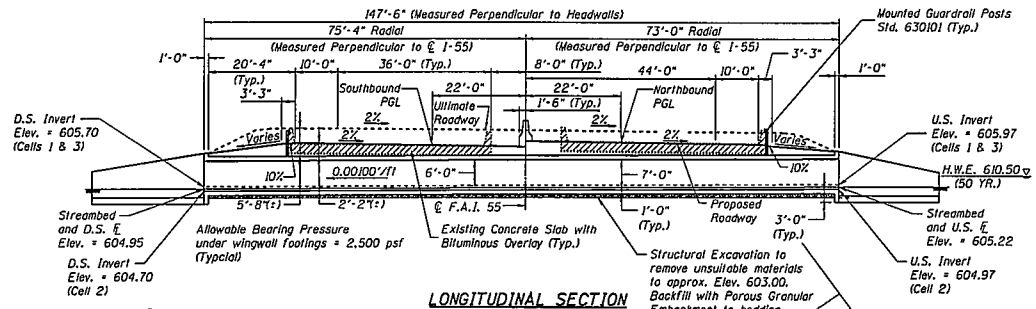

LONGITUDINAL SECTION
(Looking North)

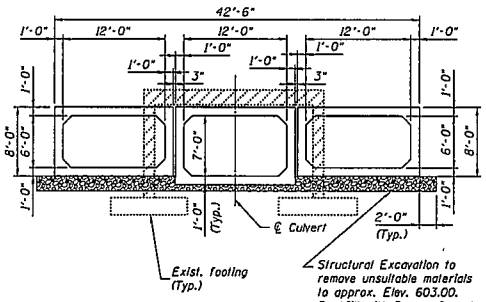

SECTION THRU BARREL
Horizontal Dimensions ⊙ Rt. L's to ℄ Culvert

Indicates portions of Existing Structure to be removed

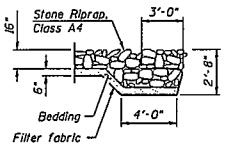

FLANK STONE RIPRAP TREATMENT DETAIL

PI Sta. = 779+08.16
Δ = 53°46'28" (RT)
D = 1°14'58"
R = 4,586.00'
T = 2,325.33'
L = 4,304.16'
E = 555.84'
S.E. = 2.6%
P.C. Sta. = 755+82.83
P.T. Sta. = 798+86.99

PROPOSED AND ULTIMATE ROADWAY CURVE DATA 21

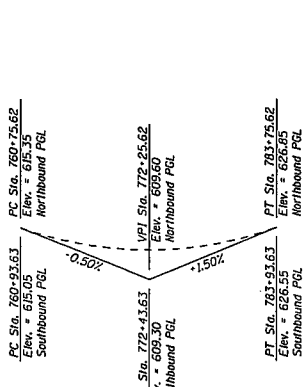

LVC = 2,300'

PROPOSED ROADWAY PROFILE GRADE

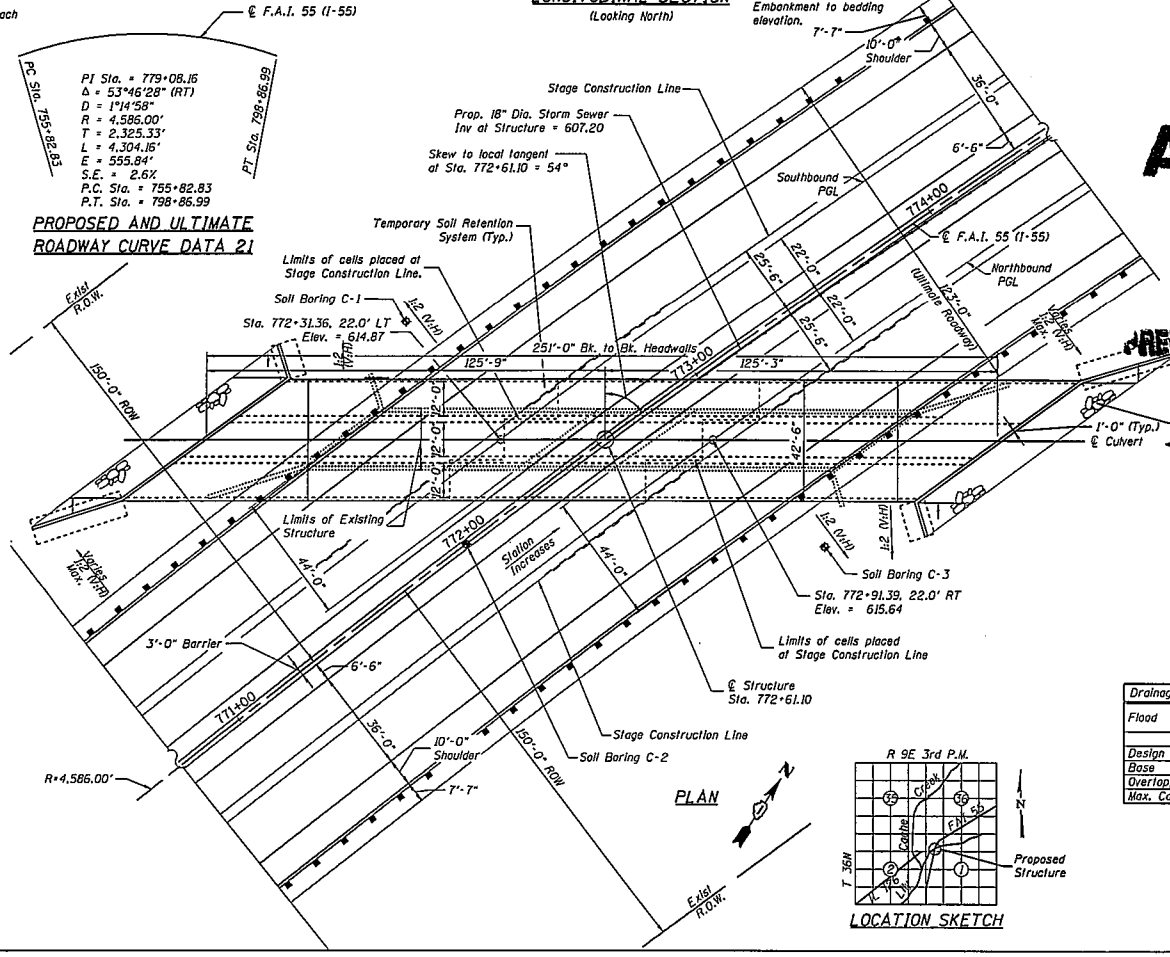

PLAN

LOCATION SKETCH

APPROVED
MAY 12 2006
HIGHWAY CLASSIFICATION
FAI Rte. 55
Functional Classification: Interstate
ADT: 23,160 (1999), 32,830 (2021), ADTT: 3,987 (1999)
DHV: 3080 (2021)
Design Speed: 65 m.p.h.
Posted Speed: m.p.h.
AS A BASIS FOR PREPARATION OF DETAILED PLANS

LOADING HS20-44 & ALTERNATE
Allow 50#/sq. ft. for future wearing surface.

DESIGN SPECIFICATIONS
2002 AASHTO

DESIGN STRESSES
FIELD UNITS
f'c = 3,500 psi
fy = 60,000 psi (Reinforcement Bars)
PRECAST UNITS
f'c = 5,000 psi
fy = 65,000 psi (Welded Wire Fabric)

WATERWAY INFORMATION

Drainage Area = 6.2 Sq Mi Ex. & Prop. Low Grade Elev. 614.08 @ Sta. 767+41.70

Flood	Freq. Yr.	Q C.F.S.	Opening Sq. Ft. Exist.	Opening Sq. Ft. Prop.	Nat. H.W.E.	Head - Ft. Exist.	Head - Ft. Prop.	Headwater El. Exist.	Headwater El. Prop.
	10	393	71.50	116.40	609.30	2.00	0.32	611.30	609.62
Design	50	513	94.30	159.60	610.50	1.62	0.24	612.12	610.74
Base	100	769	100.00	170.00	610.80	2.26	0.50	613.06	611.30
Overtopping									
Max. Calc.	500	1080	119.00	206.40	611.80	1.56	0.64	613.36	612.44

DESIGNED	KMA
CHECKED	RGD
DRAWN	MPW
CHECKED	NRF

REVISIONS NAME	DATE

ILLINOIS DEPARTMENT OF TRANSPORTATION

GENERAL PLAN
I-55 OVER
LILY CACHE SLOUGH
F.A.I. ROUTE 55 SECTION 99 (1 & 2) WRS-3
WILL COUNTY
STA. 772+61.10
SN 099-0407

DATE 05-12-2006

ROUTE NO.	SECTION	COUNTY	TOTAL SHEETS	SHEET NO.
F.A.I. 55	99 (1 & 2) WRS-3	WILL	2	2
STA.	TO STA.			

STATE OF ILLINOIS
DEPARTMENT OF TRANSPORTATION

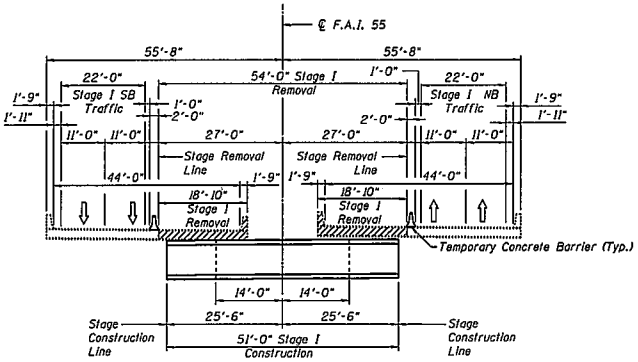

STAGE I REMOVAL AND CONSTRUCTION

All Dimensions measured perpendicular to ℄ of Roadway

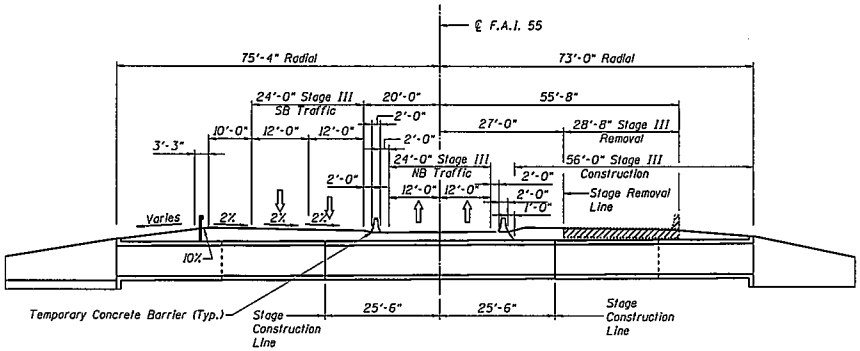

STAGE III REMOVAL AND CONSTRUCTION

All Dimensions measured perpendicular to ℄ of Roadway

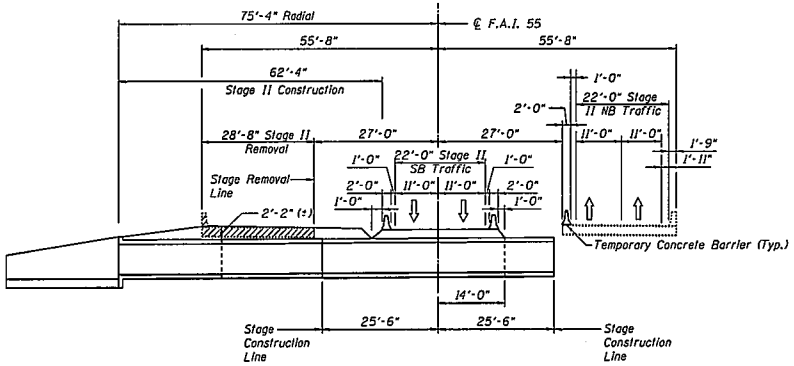

STAGE II REMOVAL AND CONSTRUCTION

All Dimensions measured perpendicular to ℄ of Roadway

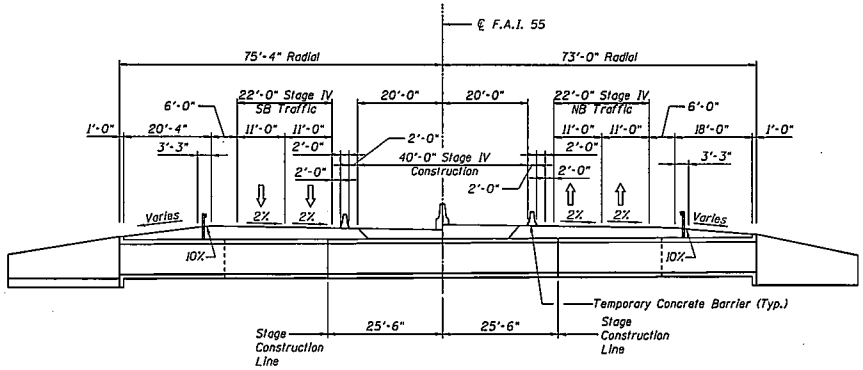

STAGE IV CONSTRUCTION

All Dimensions measured perpendicular to ℄ of Roadway

Complete Left Lanes, and Left Shoulder.
Construct Barrier at Centerline

DESIGNED	KMA
CHECKED	RCD
DRAWN	MPW
CHECKED	NAF

REVISIONS	
NAME	DATE

ILLINOIS DEPARTMENT OF TRANSPORTATION

CONSTRUCTION STAGING
I-55 OVER
LILY CACHE SLOUGH
F.A.I. ROUTE 55 SECTION 99 (1 & 2) WRS-3
WILL COUNTY
STA. 772+61.10
SN 099-0407

DATE 05-12-2006