APPROVED

MAR 08 2006

AS A BASIS FOR
PREPARATION OF DETAILED PLANS

ROUTE NO.	SECTION	COUNTY	TOTAL SHEETS	SHEET NO.
FAI 57	(X1-6-2) HBK-2	WILLIAMSON	2	1

BENCHMARK: PAINTED MARK ON TOP OF WEST CORNER OF SOUTH ABUTMENT. EXISTING S.N. 100-0007 (S.B.)
STA. 1517+35.43, 55.5' RT. ℄ F.A.I. 57
EL. 469.42

EXISTING STRUCTURE: S.N. 100-0006 (N.B.) AND S.N. 100-0007 (S.B.)

THE EXISTING STRUCTURES WERE BUILT IN 1961 UNDER FAI ROUTE 57 SECTION X1-6VB. BOTH STRUCTURES CONSIST OF THREE CONTINUOUS SPANS (47'-3", 55'-4", 47'-3") FOR A TOTAL LENGTH OF 153'-6" MEASURED BACK TO BACK OF ABUTMENTS. THE SUPERSTRUCTURES CONSIST OF A 7" REINFORCED CONCRETE DECK ON NON-COMPOSITE WIDE FLANGE BEAMS. THE SUPERSTRUCTURES ARE SUPPORTED BY HAMMERHEAD TYPE PIERS ON PILE SUPPORTED FOOTINGS AND PILE BENT ABUTMENTS. THE OUT TO OUT DECK WIDTH OF THE NORTHBOUND STRUCTURE VARIES FROM 53'-4½" TO 55'-7". THE OUT TO OUT DECK WIDTH OF THE SOUTHBOUND STRUCTURE VARIES FROM 37'-9⅝" TO 42'-10⅞".

THE EXISTING STRUCTURES SHALL BE REMOVED IN STAGES AND DISPOSED OF ACCORDING TO SECTION 501 OF THE STANDARD SPECIFICATIONS.

THE ROADWAY SHALL REMAIN OPEN TO TRAFFIC, USING STAGE CONSTRUCTION, DURING THE CONSTRUCTION PERIOD. ENTRANCE AND EXIT RAMPS TO WEST MAIN ST. (OLD RT. 13) SHALL BE CLOSED DURING STAGE I CONSTRUCTION.

SALVAGE: NO SALVAGE

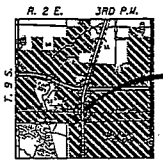

LOCATION SKETCH

ROADWAY DATA
F.A.I. RT. 57

CLASSIFICATION:	INTERSTATE (RURAL)	
ADT:	28,400 (2000):	48,500 (2027)
ADTT:	9,710 (2000):	16,600 (2027)
DHV:	3,100 (2000):	5,300 (2027)
DESIGN SPEED:	70 MPH	
POSTED SPEED:	65 MPH	

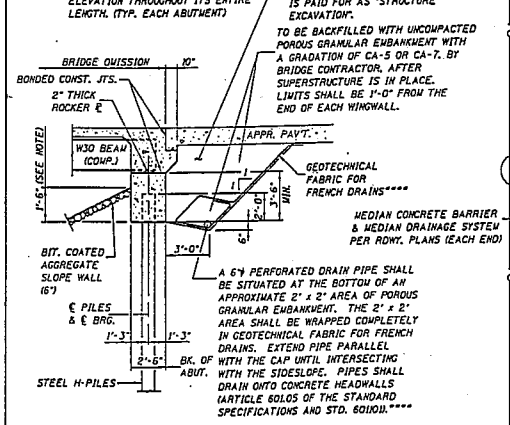

NOTE: THE BOTTOM OF THE ABUTMENT CAP SHALL BE HELD AT A CONSTANT ELEVATION THROUGHOUT ITS ENTIRE LENGTH. (TYP. EACH ABUTMENT)

EXCAVATION FOR PLACING POROUS GRANULAR EMBANKMENT IS PAID FOR AS "STRUCTURE EXCAVATION".

TO BE BACKFILLED WITH UNCOMPACTED POROUS GRANULAR EMBANKMENT WITH A GRADATION OF CA-5 OR CA-7. BY BRIDGE CONTRACTOR, AFTER SUPERSTRUCTURE IS IN PLACE. LIMITS SHALL BE 1'-0" FROM THE END OF EACH WINGWALL.

A 6" PERFORATED DRAIN PIPE SHALL BE SITUATED AT THE BOTTOM OF AN APPROXIMATE 2' x 2' AREA OF POROUS GRANULAR EMBANKMENT. THE 2' x 2' AREA SHALL BE WRAPPED COMPLETELY IN GEOTECHNICAL FABRIC FOR FRENCH DRAINS. EXTEND PIPE PARALLEL WITH THE CAP UNTIL INTERSECTING WITH THE SIDESLOPE. PIPES SHALL DRAIN ONTO CONCRETE HEADWALLS (ARTICLE 601.05 OF THE STANDARD SPECIFICATIONS AND STD. 601.01).****

SECTION THRU ABUTMENT

**** INCLUDED IN THE COST OF "POROUS GRANULAR EMBANKMENT".

DESIGNED:	B.G.H.
CHECKED:	L.D.G.
DRAWN:	K.H.L.
CHECKED:	B.G.H.

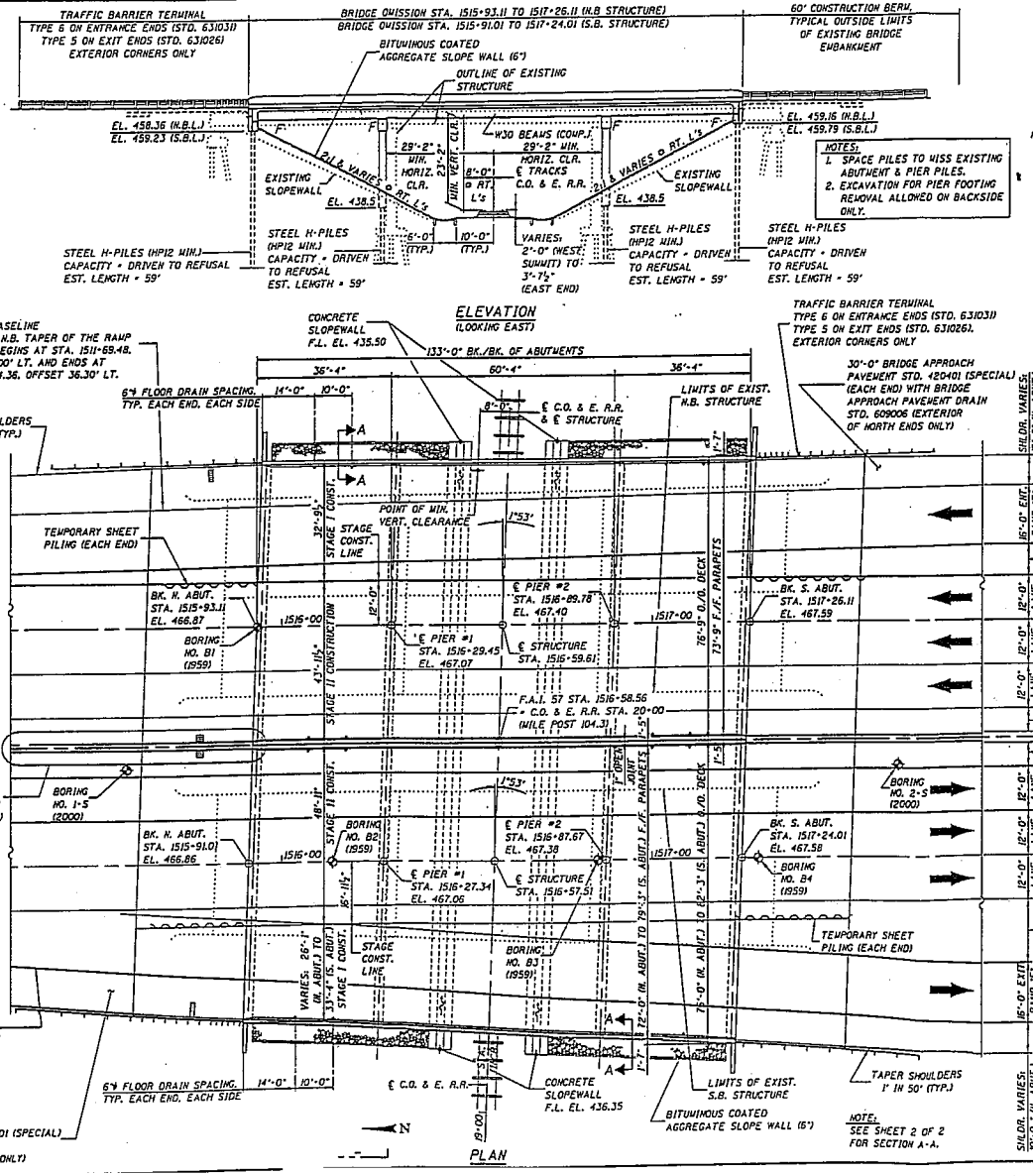

DESIGN SPECIFICATIONS
2002 AASHTO

DESIGN STRESSES

FIELD UNITS
f'c = 3,500 psi
fy = 60,000 psi (REINF.)

STRUCTURAL STEEL
fy = 50,000 psi (M270, GRADE 50)

LOADING HS20-44 & ALT. MILITARY LOADING
ALLOW 50 psf FOR FUTURE WEARING SURFACE.

SEISMIC DATA
SEISMIC PERFORMANCE CATEGORY (SPC): B
BEDROCK ACCELERATION COEFFICIENT (A): 12.2%
SITE COEFFICIENT (S) = 1.5 (TYPE III)

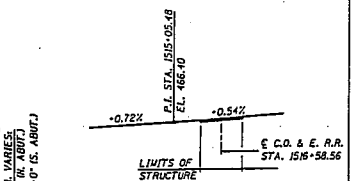

PROFILE GRADE - F.A.I. RT. 57
NORTHBOUND & SOUTHBOUND LANES

TOP OF RAIL ELEVATIONS
C.O. & E. R.R.
(NORTH RAIL)

GENERAL PLAN
INTERSTATE 57 OVER
C.O. & E. R.R.
F.A.I. RT. 57 SEC. (X1-6-2)HBK-2
WILLIAMSON COUNTY
STA. 1516+58.56
S.N. 100-0086 (N.B.)
S.N. 100-0087 (S.B.)

GPL:DOCRBRIDGE SEPT. 20, 2005

HAL & CO. NO. 5187.9

APPROVED

MAR 08 2006

AS A BASIS FOR

PREPARATION OF DETAILED PLANS
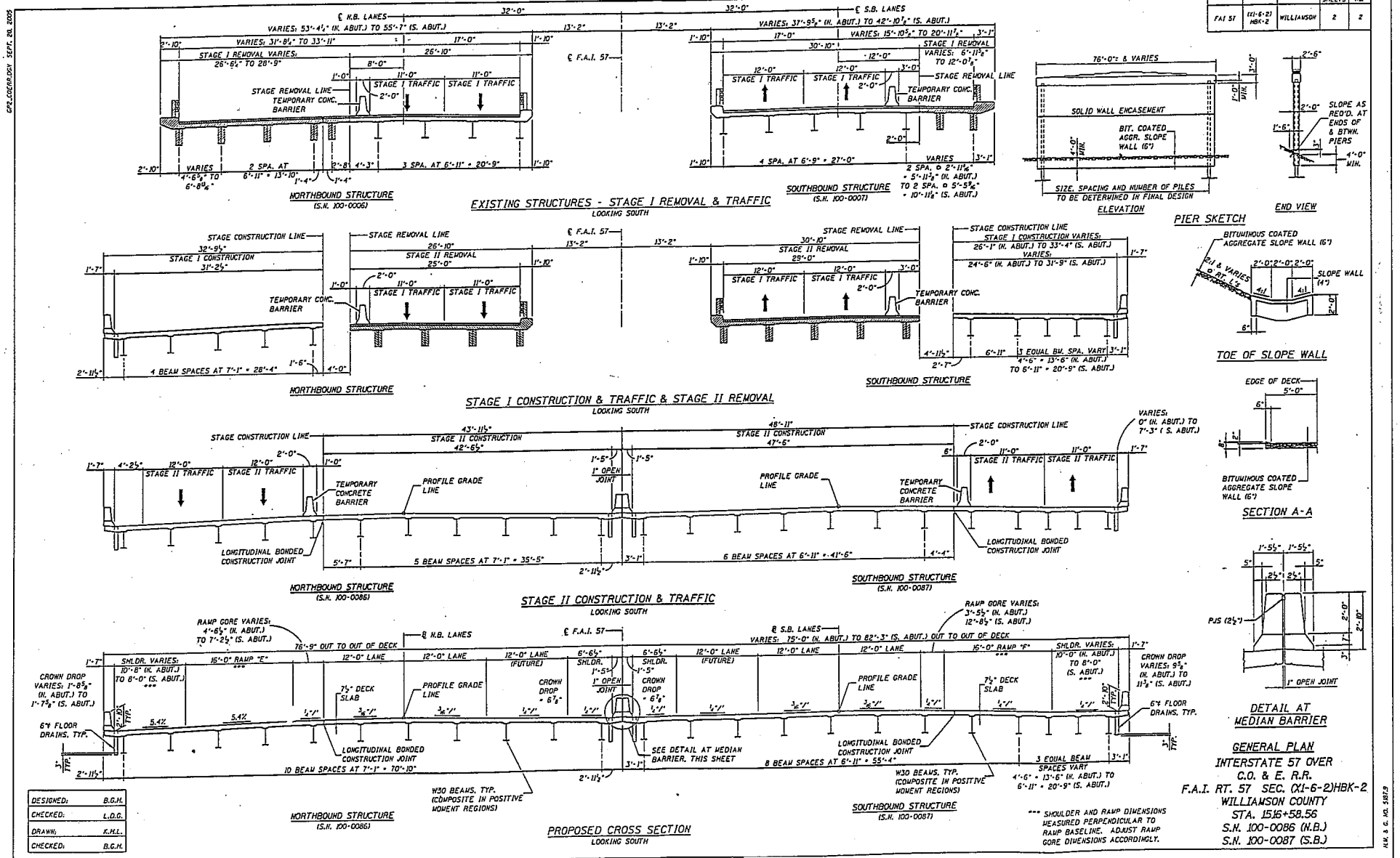
ROUTE NO.	SECTION	COUNTY	TOTAL SHEETS	SHEET NO.
FAI 57	(X1-6-2) HBK-2	WILLIAMSON	2	2