CELL / MODEL NAME	DESCRIPTION	DATE
DB-H-0	Double box culvert with horiz cantilever wingwalls, no skew	10/22/2004
DB-H-L	Double box culvert with horiz cantilever wingwalls, ahead left	10/22/2004
DB-H-R	Double box culvert with horiz cantilever wingwalls, ahead right	10/22/2004
DB-L-0	Double box culvert with "L" type wingwalls, no skew	10/22/2004
DB-L-L	Double box culvert with "L" type wingwalls, ahead left	10/22/2004
DB-L-R	Double box culvert with "L" type wingwalls, ahead right	10/22/2004
DB-T-0	Double box culvert with "T" type wingwalls, no skew	10/22/2004
DB-T-L	Double box culvert with "T" type wingwalls, ahead left	10/22/2004
DB-T-R	Double box culvert with "T" type wingwalls, ahead right	10/22/2004

STATE OF ILLINOIS
DEPARTMENT OF TRANSPORTATION

ROUTE NO.	SECTION	COUNTY	TOTAL SHEETS	SHEET NO.
-				
-	-	-		
FED. ROAD DIST. NO. 7		ILLINOIS	FED. AID PROJECT-	

SHEET NO. -
- SHEETS

Contract #

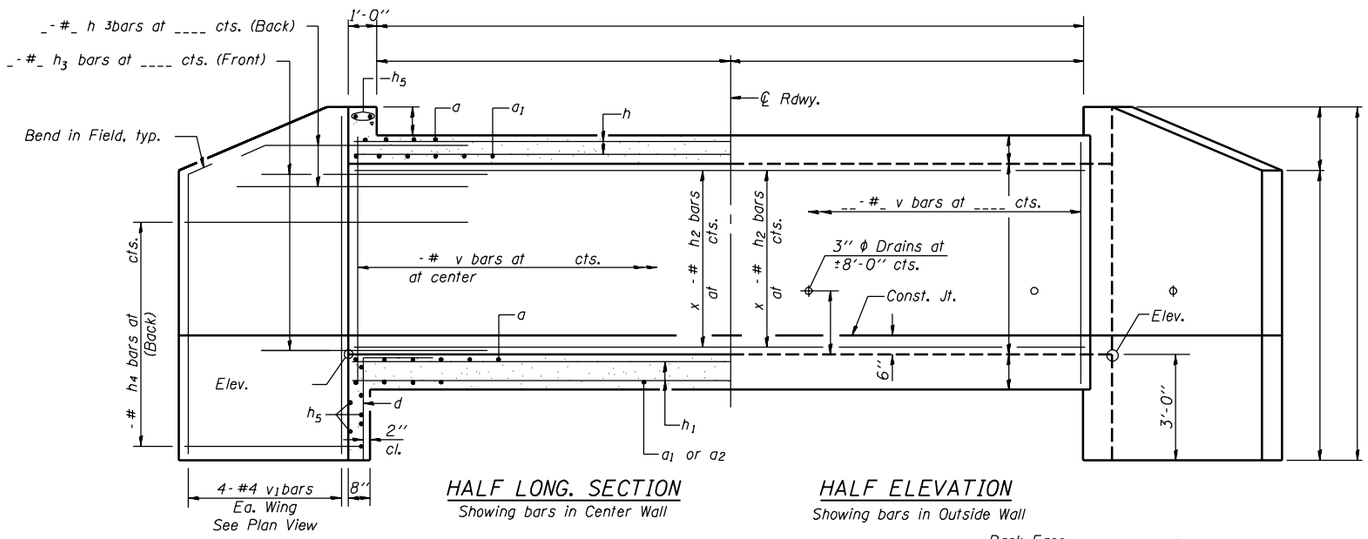

HALF LONG. SECTION
Showing bars in Center Wall

HALF ELEVATION
Showing bars in Outside Wall

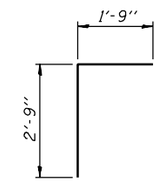

BAR d

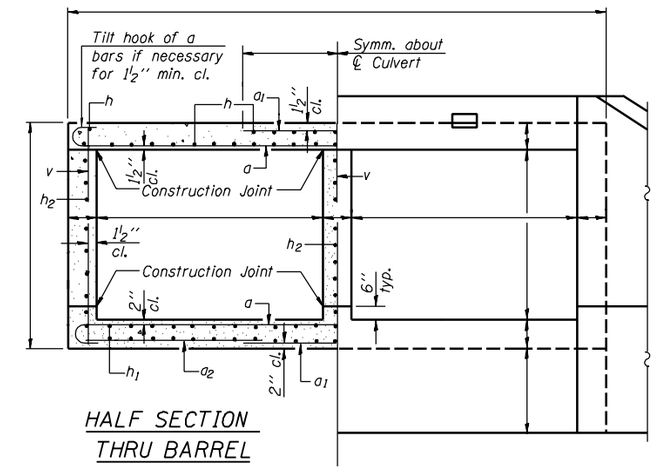

HALF SECTION
THRU BARREL

HALF END ELEVATION

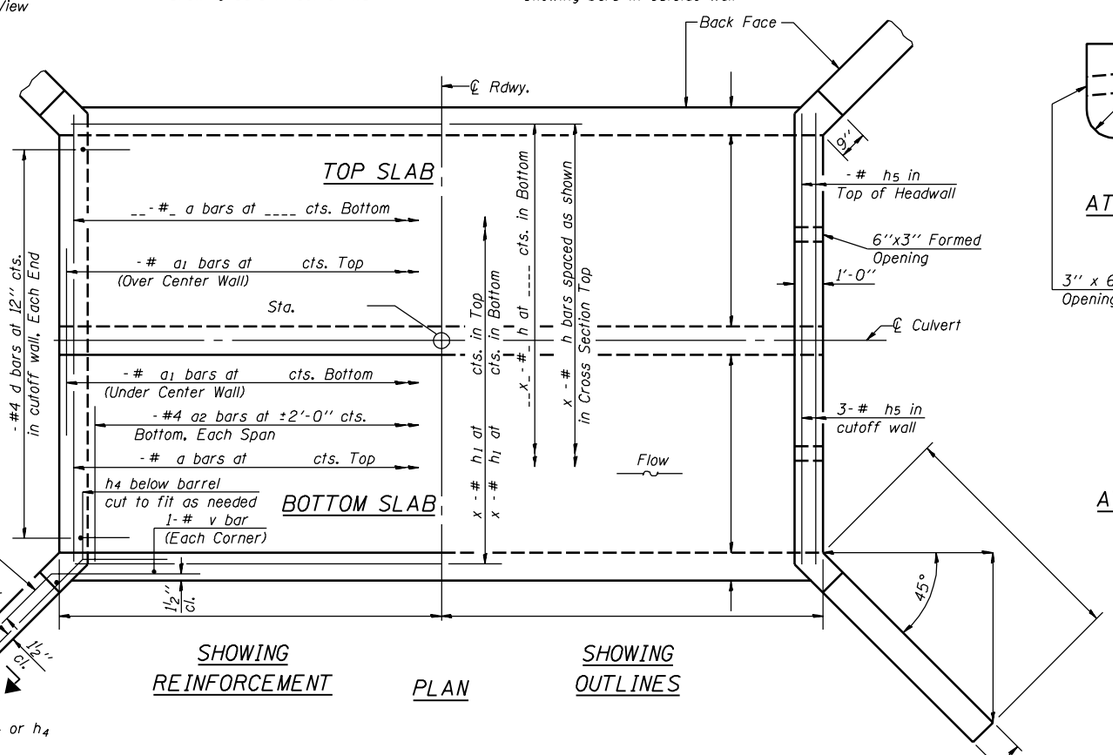

SHOWING
REINFORCEMENT

PLAN

SHOWING
OUTLINES

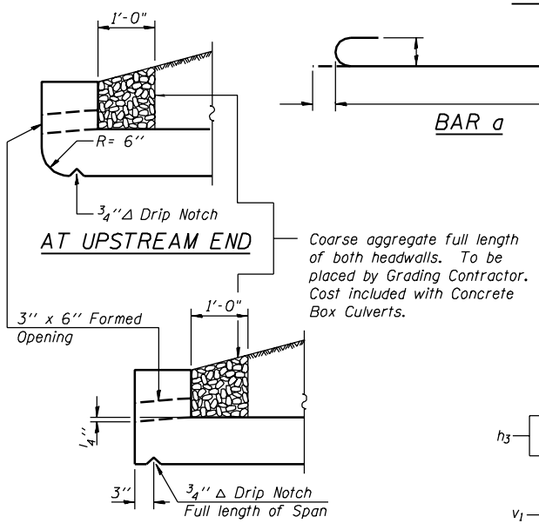

AT UPSTREAM END

AT DOWNSTREAM END

DRAIN DETAIL

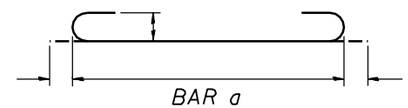

BAR a

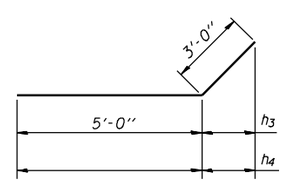

BARS h 3 & h4

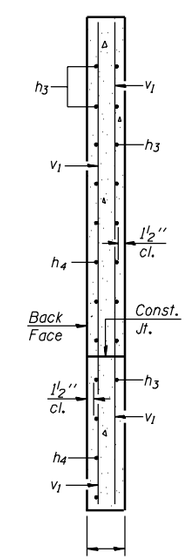

SECTION A-A

BILL OF MATERIAL

Bar	No.	Size	Length	Shape
a				
a1				
a2		#4		
d		#4	4'-6"	
h_				
h1				
h2				
h3			8'-0"	
h4				
h5				
v				
v1		#4		
Concrete Box Culverts			Cu. Yd.	
Reinforcement Bars			Pound	

DESIGNED -	- 200
CHECKED -	EXAMINED
DRAWN -	ENGINEER OF BRIDGE DESIGN
CHECKED -	PASSED
	ENGINEER OF BRIDGES AND STRUCTURES

Notes: A distance of half the length of the wingwall but not less than six feet of the barrel shall be poured monolithically with the wingwalls.
Bars indicated thus 12x4-#5 etc. indicates 12 lines of bars with 4 lengths per line.

DB-H-0

10-22-04

STATE OF ILLINOIS
DEPARTMENT OF TRANSPORTATION

ROUTE NO.	SECTION	COUNTY	TOTAL SHEETS	SHEET NO.
-				
-	-	-		
FED. ROAD DIST. NO. 7		ILLINOIS	FED. AID PROJECT-	

SHEET NO. -
- SHEETS

Contract #

(Back)
- # h_3 bars at cts. Short Wing
- # h_7 bars at cts. Long Wing

(Front)
- # h_3 bars at cts. Short Wing
- # h_7 bars at cts. Long Wing

Bend in Field. typ.

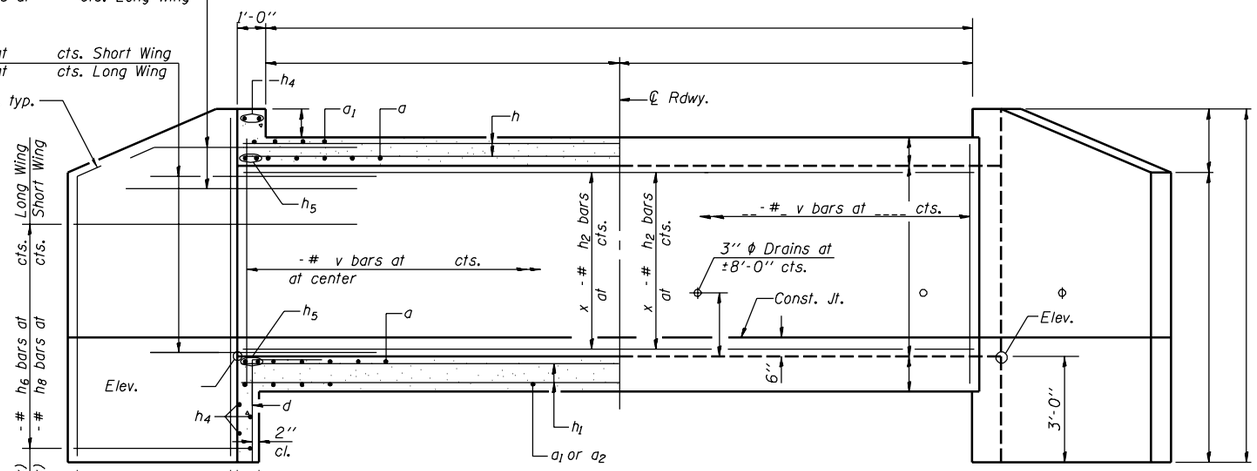

HALF LONG. SECTION
Showing bars in Center Wall

HALF ELEVATION
Showing bars in Outside Wall

Dimensions are at right angles to ℄ Roadway

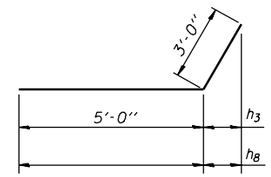

BARS h_3 & h_8

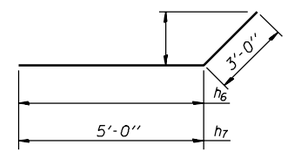

BARS h_6 & h_7

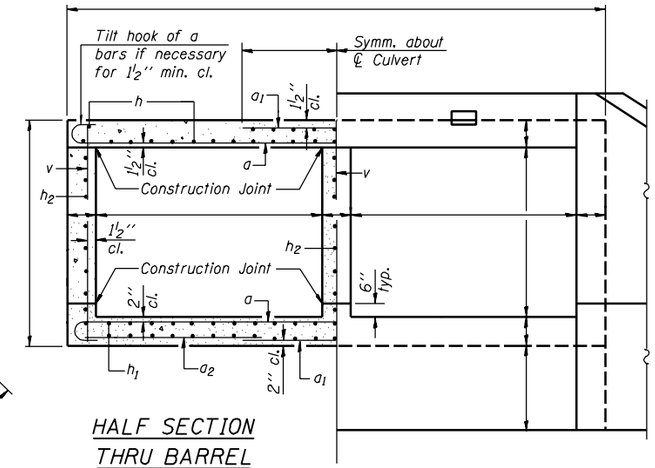

HALF SECTION THRU BARREL

HALF END ELEVATION

Notes:
A distance of half the length of the wingwall but not less than six feet of the barrel shall be poured monolithically with the wingwalls.
Bars indicated thus 12x4-#5 etc. indicates 12 lines of bars with 4 lengths per line.

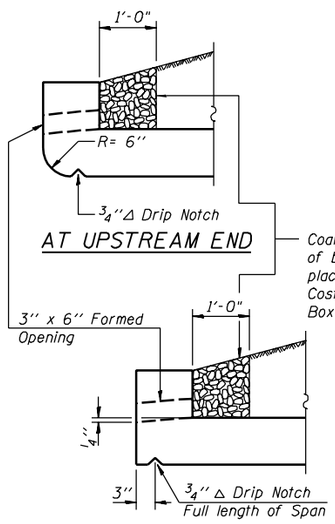

AT UPSTREAM END

Coarse aggregate full length of both headwalls. To be placed by Grading Contractor. Cost included with Concrete Box Culverts.

AT DOWNSTREAM END

DRAIN DETAIL

BAR d

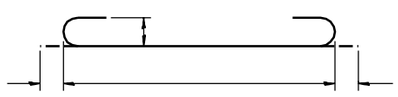

BAR a

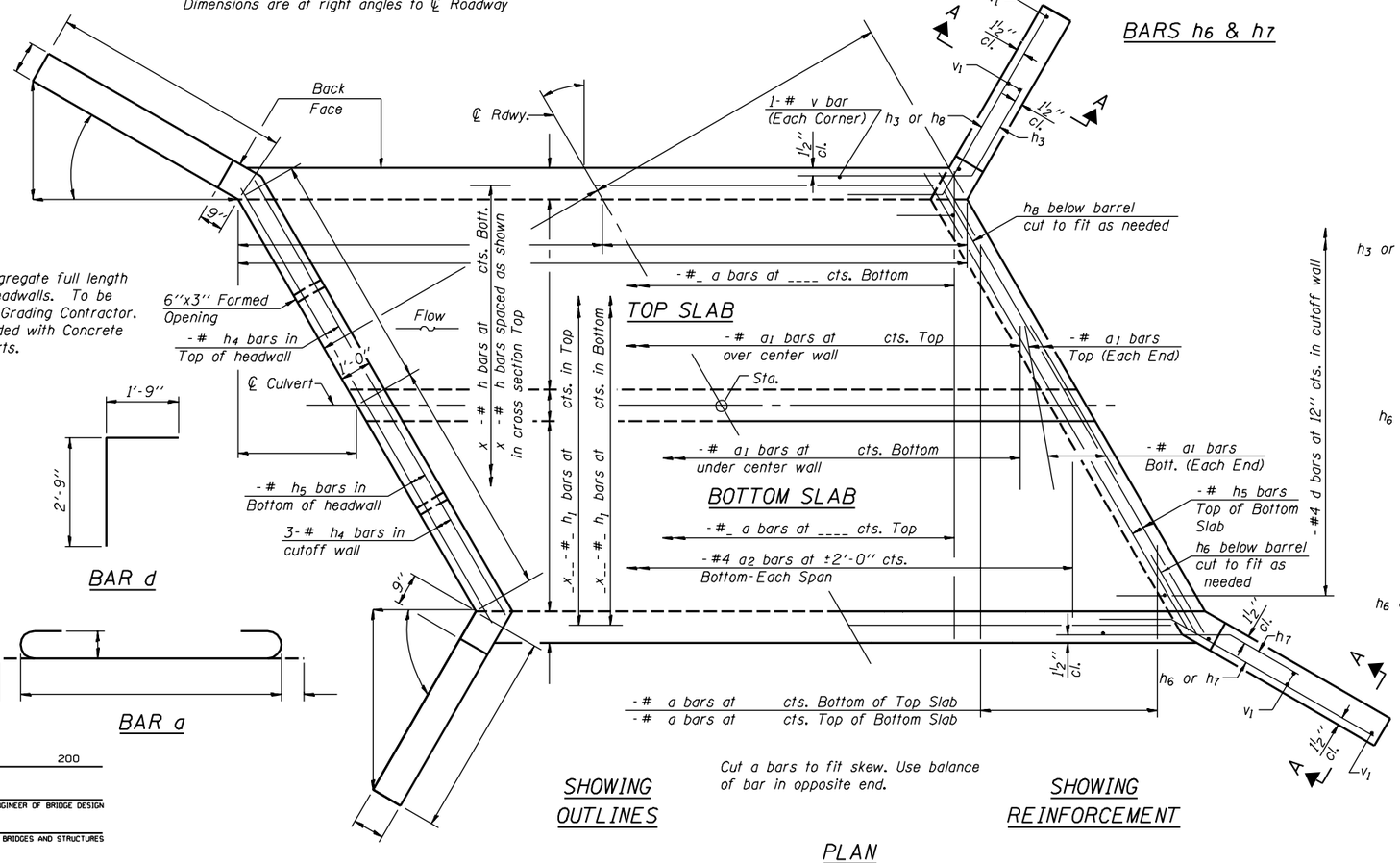

Cut a bars to fit skew. Use balance of bar in opposite end.

SHOWING OUTLINES

SHOWING REINFORCEMENT

PLAN

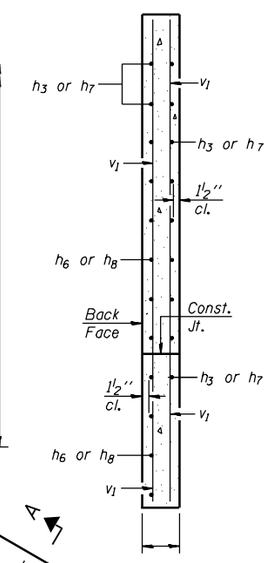

SECTION A-A

BILL OF MATERIAL

Bar	No.	Size	Length	Shape
a				
a_1				
a_2		#4		
d		#4	4'-6"	
h				
h_1				
h_2				
h_3			8'-0"	
h_4				
h_5				
h_6				
h_7			8'-0"	
h_8				
v				
v_1				
Concrete Box Culverts			Cu. Yd.	
Reinforcement Bars			Pound	

DESIGNED -	
CHECKED -	
DRAWN -	
CHECKED -	

- 200

EXAMINED

ENGINEER OF BRIDGE DESIGN

PASSED

ENGINEER OF BRIDGES AND STRUCTURES

DB-H-L 10-22-04

STATE OF ILLINOIS
DEPARTMENT OF TRANSPORTATION

ROUTE NO.	SECTION	COUNTY	TOTAL SHEETS	SHEET NO.
-				
-	-	-		
FED. ROAD DIST. NO. 7		ILLINOIS	FED. AID PROJECT-	

SHEET NO. -
- SHEETS

Contract #

(Back)
- # h_3 bars at cts. Short Wing
- # h_7 bars at cts. Long Wing

(Front)
- # h_3 bars at cts. Short Wing
- # h_7 bars at cts. Long Wing

Bend in Field. typ.

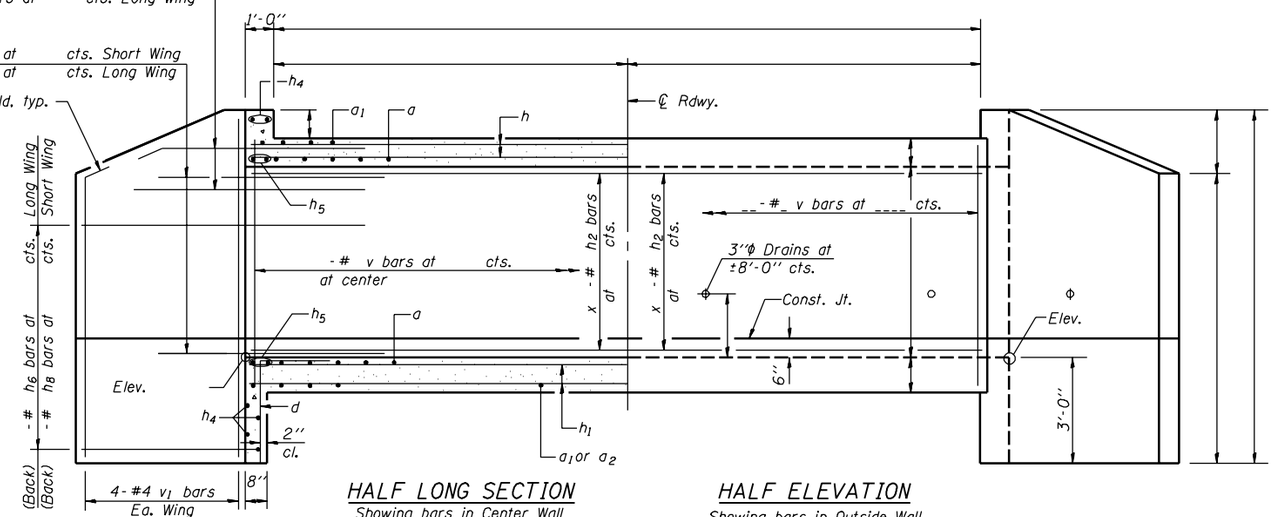

HALF LONG SECTION
Showing bars in Center Wall

HALF ELEVATION
Showing bars in Outside Wall

Dimensions are at right angles to ℄ Roadway

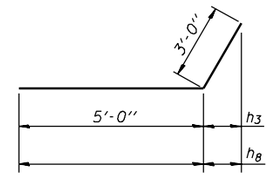

BARS h_3 & h_8

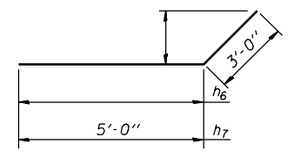

BARS h_6 & h_7

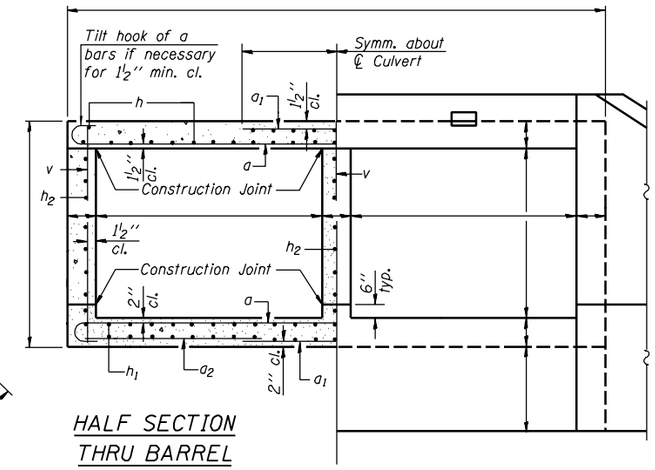

HALF SECTION THRU BARREL

HALF END ELEVATION

Notes: A distance of half the length of the wingwall but not less than six feet of the barrel shall be poured monolithically with the wingwalls.
Bars indicated thus 12x4-#5 etc. indicates 12 lines of bars with 4 lengths per line.

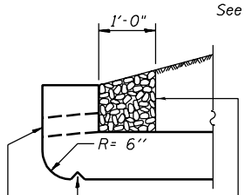

AT UPSTREAM END

Coarse aggregate full length of both headwalls. To be placed by Grading Contractor. Cost included with Concrete Box Culverts.

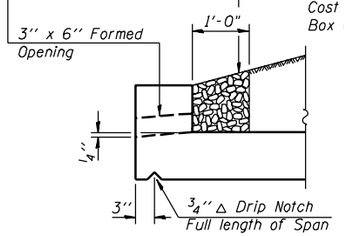

AT DOWNSTREAM END

DRAIN DETAIL

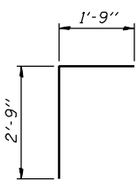

BAR d

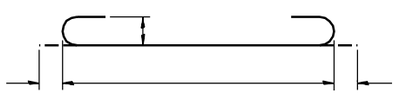

BAR a

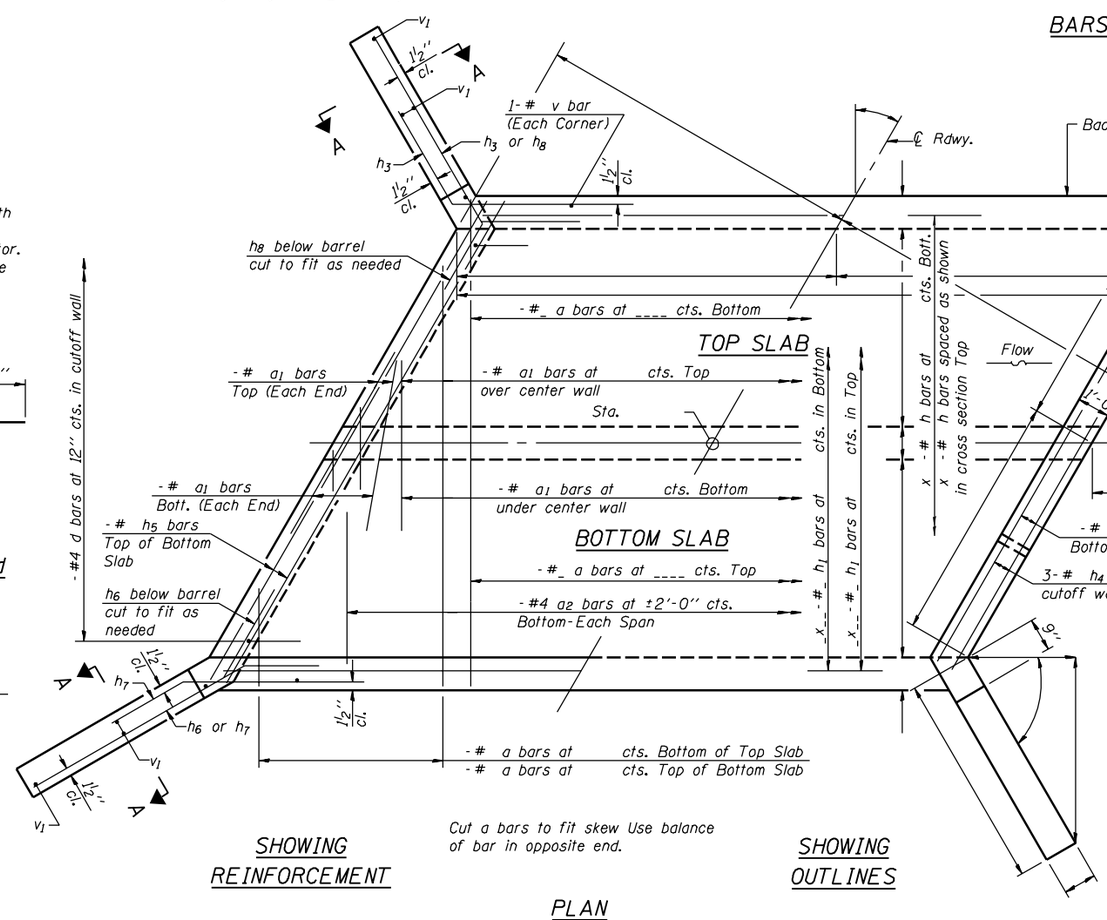

SHOWING REINFORCEMENT

Cut a bars to fit skew Use balance of bar in opposite end.

SHOWING OUTLINES

PLAN

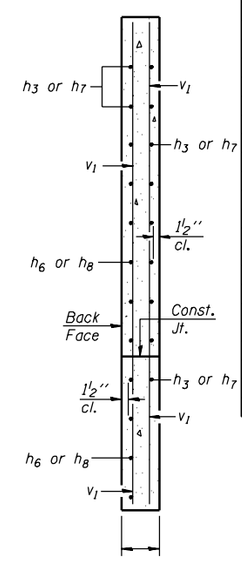

SECTION A-A

BILL OF MATERIAL

Bar	No.	Size	Length	Shape
a				
a_1				
a_2		#4		
d		#4	4'-6"	
h				
h_1				
h_2				
h_3			8'-0"	
h_4				
h_5				
h_6				
h_7			8'-0"	
h_8				
v				
v_1				
Concrete Box Culverts			Cu. Yd.	
Reinforcement Bars			Pound	

DESIGNED -	- 200
CHECKED -	EXAMINED ENGINEER OF BRIDGE DESIGN
DRAWN -	PASSED ENGINEER OF BRIDGES AND STRUCTURES
CHECKED -	

DB-H-R 10-22-04

STATE OF ILLINOIS
DEPARTMENT OF TRANSPORTATION

ROUTE NO.	SECTION	COUNTY	TOTAL SHEETS	SHEET NO.
-				
-	-	-		
FED. ROAD DIST. NO. 7		ILLINOIS	FED. AID PROJECT-	

SHEET NO. -
- SHEETS

Contract #

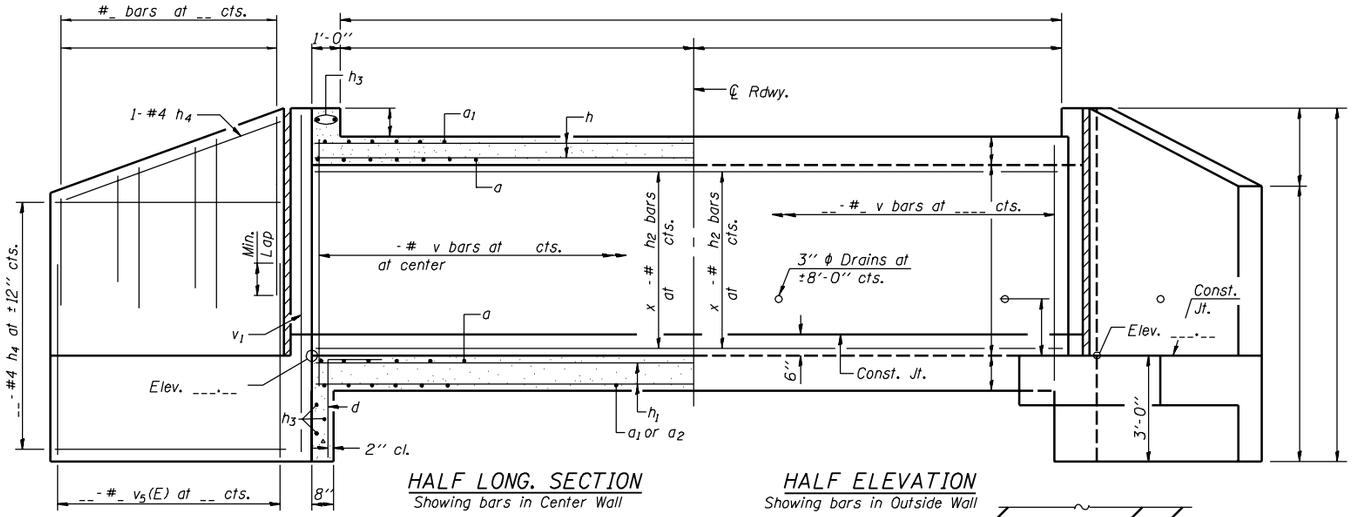

HALF LONG. SECTION
Showing bars in Center Wall

HALF ELEVATION
Showing bars in Outside Wall

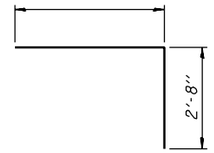

BAR z

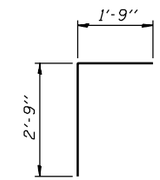

BAR d

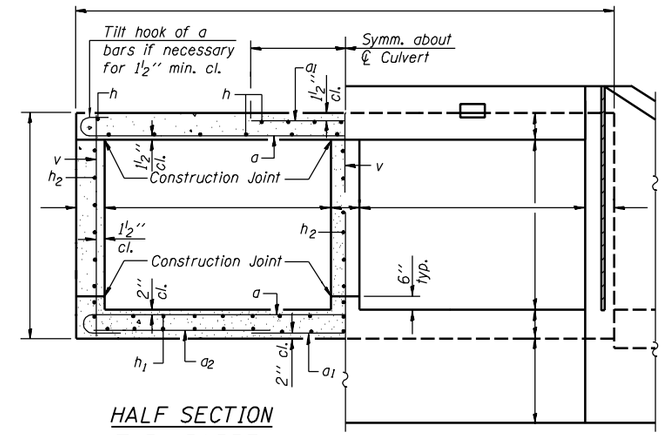

HALF SECTION THRU BARREL

HALF END ELEVATION

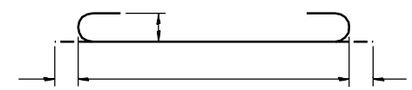

BAR a

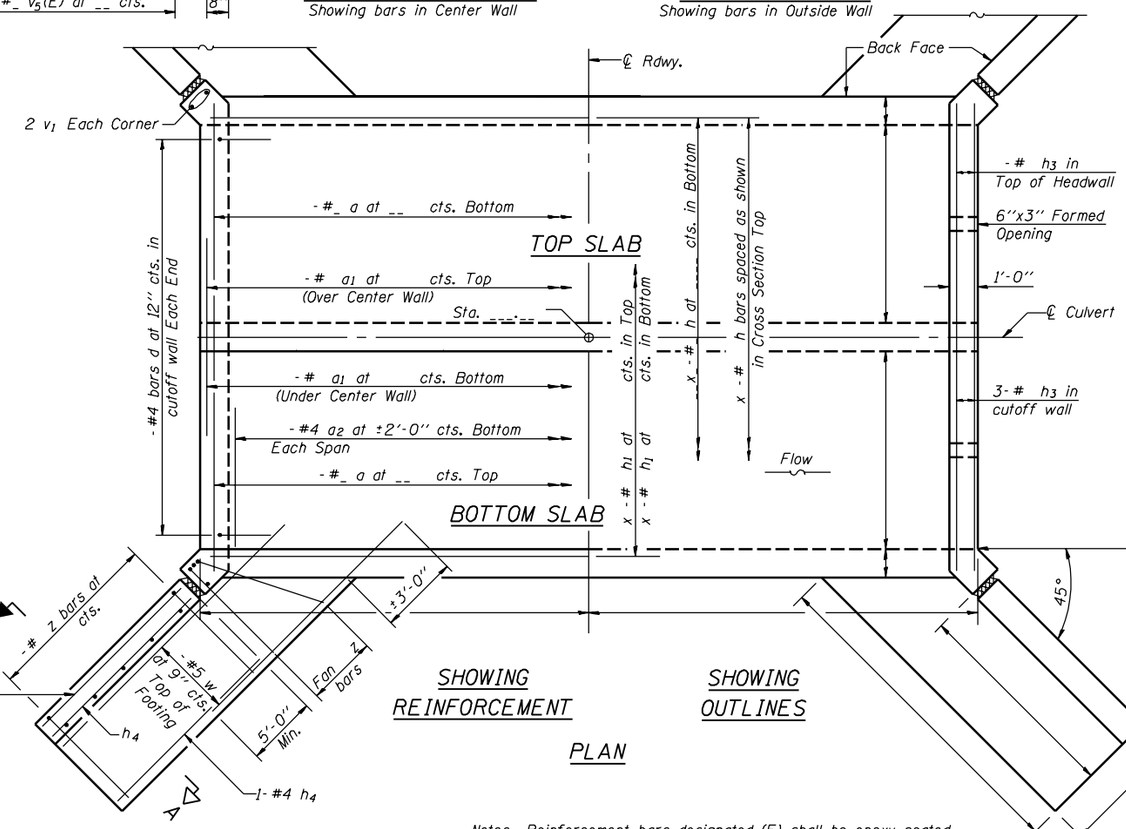

SHOWING REINFORCEMENT

SHOWING OUTLINES

PLAN

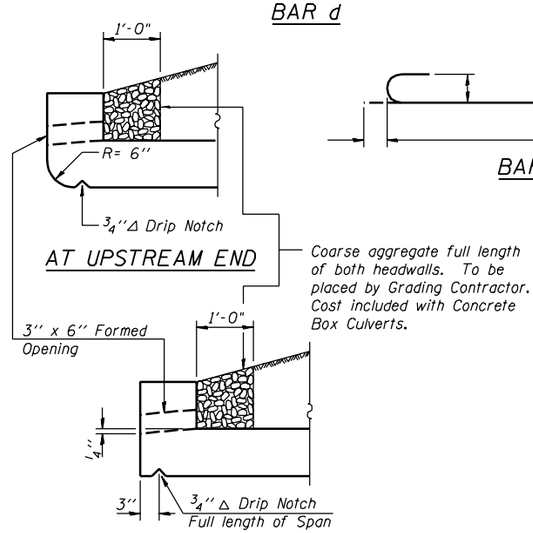

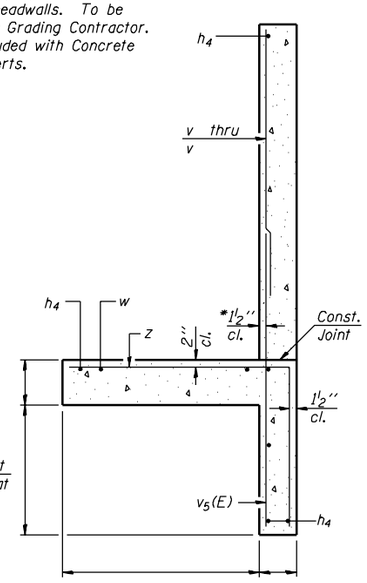

SECTION A-A

*v5(E) bars shall not be placed more than 1½" cl. from back face of wingwall.

BILL OF MATERIAL

Bar	No.	Size	Length	Shape
a				
a1				
a2		#4		
d		#4	4'-6"	
h				
h1				
h2				
h3				
h4		#4		
v				
v1				
v2				
v3				
v4				
v5(E)				
w		#5		
z				
Concrete Box Culverts			Cu. Yd.	
Reinforcement Bars, Epoxy Coated			Pound	
Reinforcement Bars			Pound	

Notes: Reinforcement bars designated (E) shall be epoxy coated.
Bars indicated thus 12x4-#5 etc. indicates 12 lines of bars with 4 lengths per line.

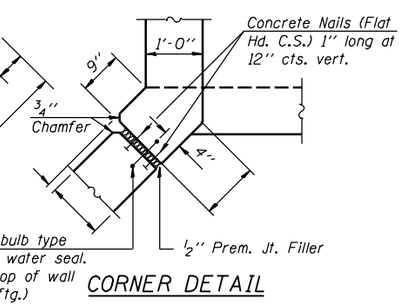

CORNER DETAIL

DESIGNED -	
CHECKED -	
DRAWN -	
CHECKED -	

- 200

EXAMINED
ENGINEER OF BRIDGE DESIGN

PASSED
ENGINEER OF BRIDGES AND STRUCTURES

DB-L-0 10-22-04

STATE OF ILLINOIS
DEPARTMENT OF TRANSPORTATION

ROUTE NO.	SECTION	COUNTY	TOTAL SHEETS	SHEET NO.
-				
-	-	-		
FED. ROAD DIST. NO. 7		ILLINOIS	FED. AID PROJECT-	

SHEET NO. -
- SHEETS

Contract #

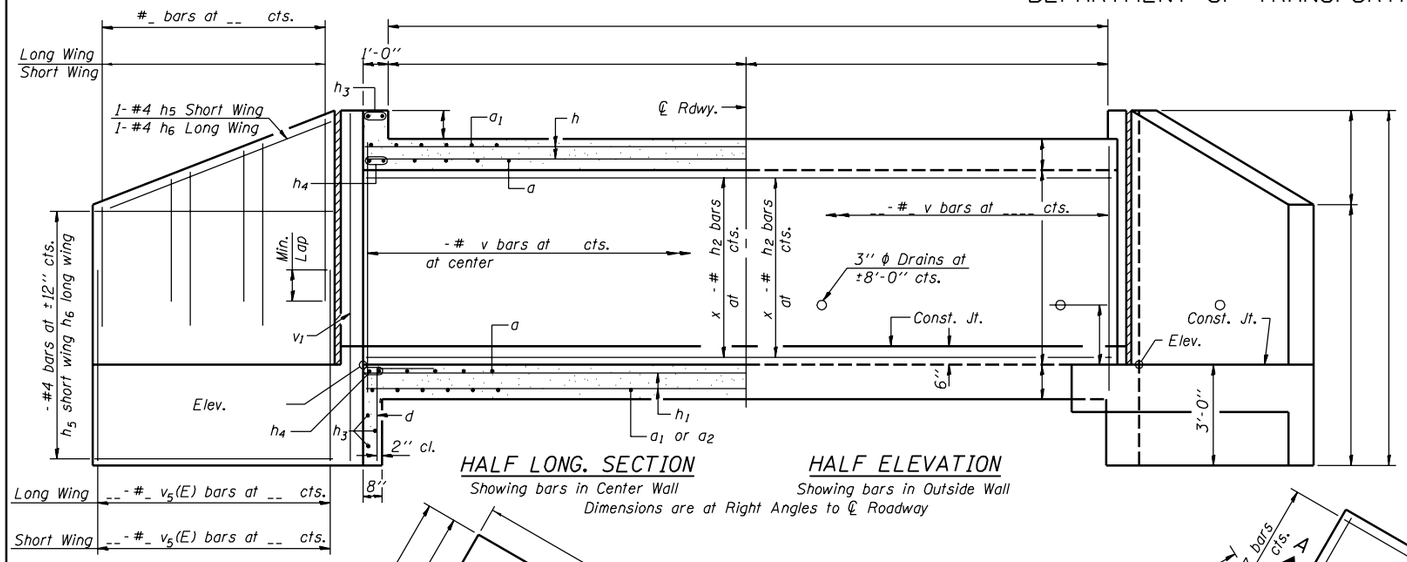

HALF LONG. SECTION
Showing bars in Center Wall

HALF ELEVATION
Showing bars in Outside Wall
Dimensions are at Right Angles to ℄ Roadway

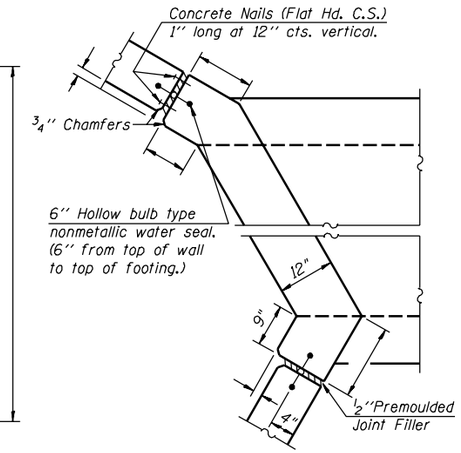

CORNER DETAIL

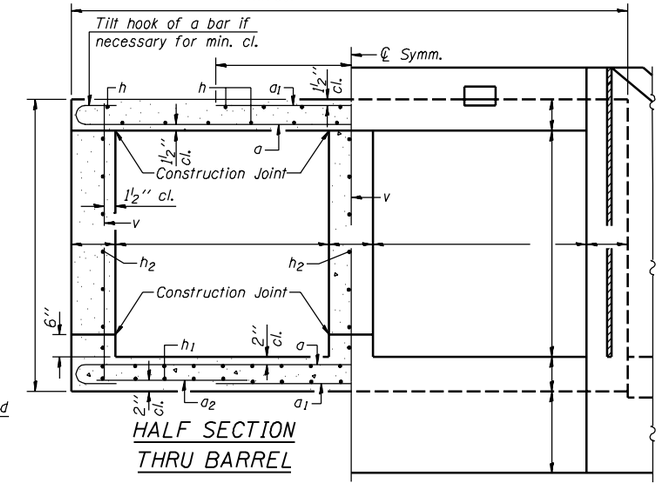

HALF SECTION
THRU BARREL

HALF END ELEVATION

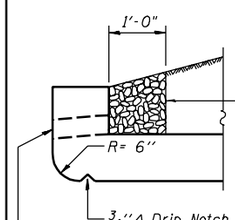

AT UPSTREAM END

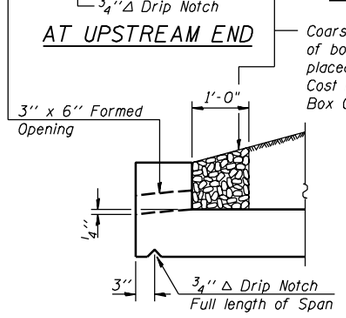

AT DOWNSTREAM END

DRAIN DETAIL

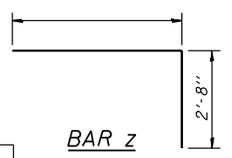

BAR z

Coarse aggregate full length of both headwalls. To be placed by Grading Contractor. Cost included with Concrete Box Culverts.

BAR d

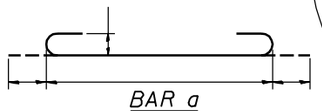

BAR a

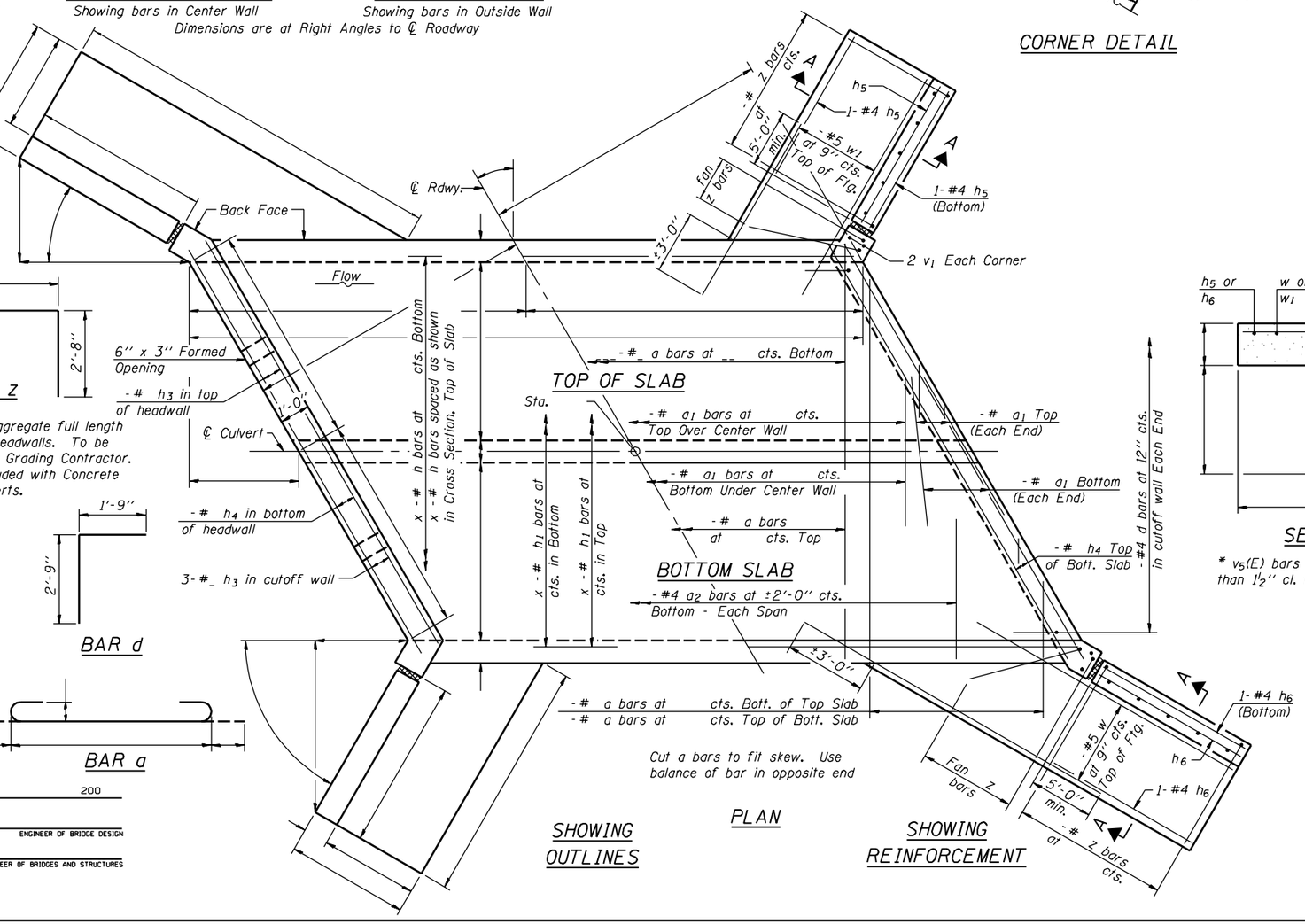

SHOWING OUTLINES

PLAN

SHOWING REINFORCEMENT

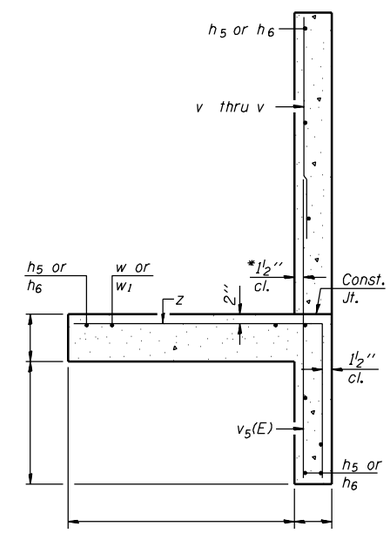

SECTION A-A

* v5(E) bars shall not be placed more than 1 1/2" cl. from back face of wingwalls.

BILL OF MATERIAL

Bar	No.	Size	Length	Shape
a				
a1				
a2		#4		
d		#4	4'-6"	
h				
h1				
h2				
h3				
h4				
h5		#4		
h6		#4		
v				
v1				
v2				
v3				
v4				
v5(E)				
w		#5		
w1		#5		
z				
Concrete Box Culverts			Cu. Yd.	
Reinforcement Bars, Epoxy Coated			Pound	
Reinforcement Bars			Pound	

Notes:
Reinforcement bars designated (E) shall be epoxy coated.
Bars indicated thus 12x4-#5 etc. indicates 12 lines of bars with 4 lengths per line.

DESIGNED -	
CHECKED -	
DRAWN -	
CHECKED -	

- 200

EXAMINED
ENGINEER OF BRIDGE DESIGN

PASSED
ENGINEER OF BRIDGES AND STRUCTURES

DB-L-L 10-22-04

STATE OF ILLINOIS
DEPARTMENT OF TRANSPORTATION

ROUTE NO.	SECTION	COUNTY	TOTAL SHEETS	SHEET NO.
-				
-	-	-		
FED. ROAD DIST. NO. 7		ILLINOIS	FED. AID PROJECT-	

SHEET NO. -
- SHEETS

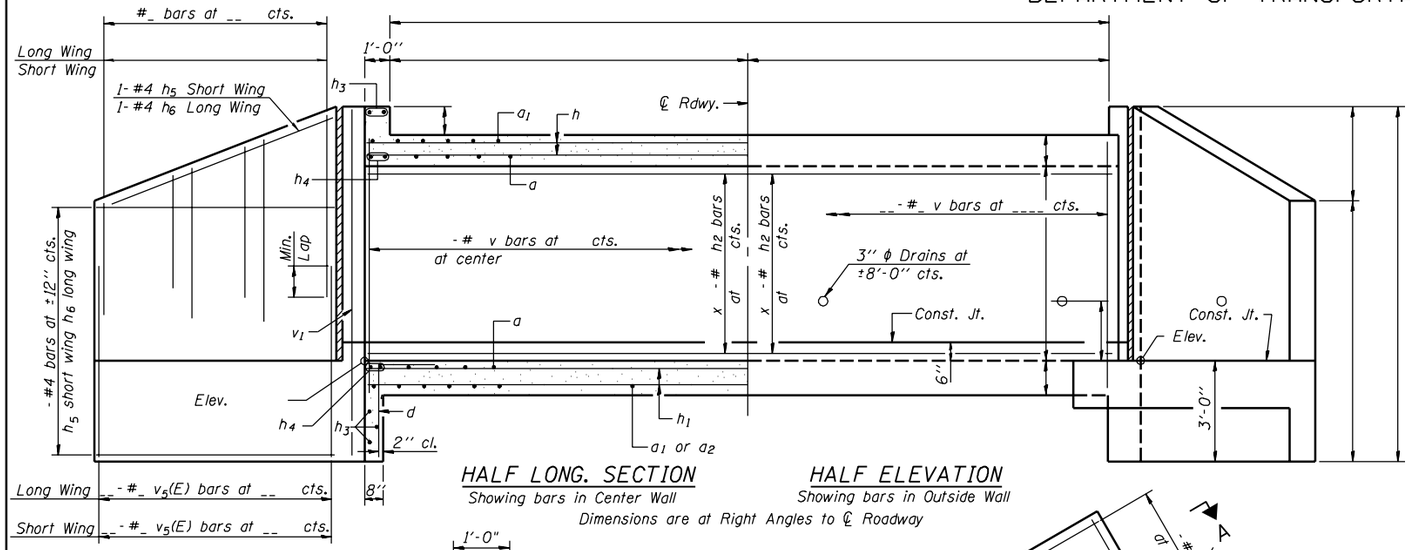

HALF LONG. SECTION
Showing bars in Center Wall

HALF ELEVATION
Showing bars in Outside Wall

Dimensions are at Right Angles to ℄ Roadway

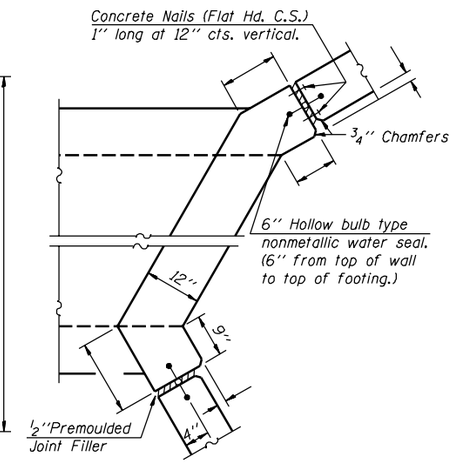

CORNER DETAIL

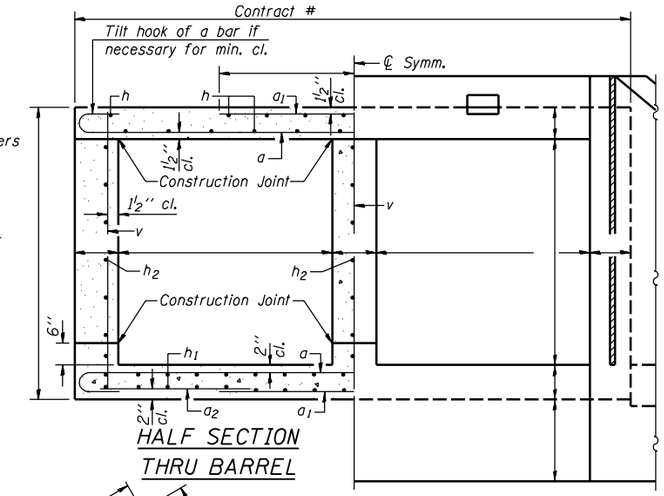

HALF SECTION
THRU BARREL

HALF END ELEVATION

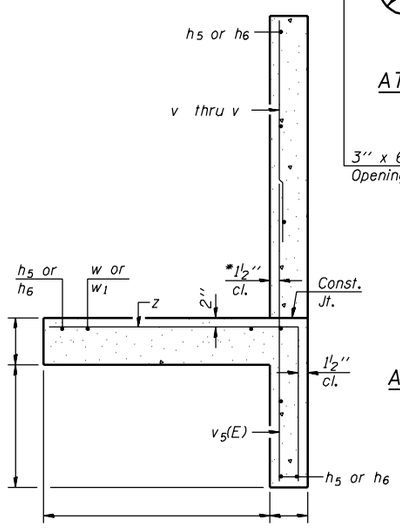

SECTION A-A

* $v_5(E)$ bars shall not be placed more than 1½" cl. from back face of wingwalls.

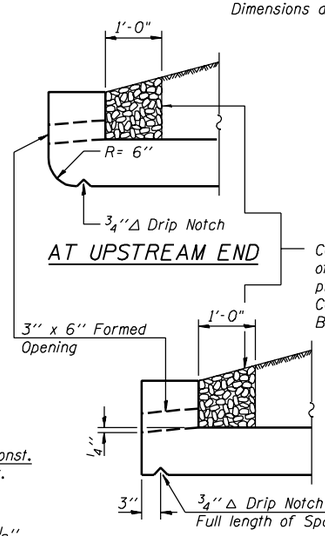

AT UPSTREAM END

Coarse aggregate full length of both headwalls. To be placed by Grading Contractor. Cost included with Concrete Box Culverts.

AT DOWNSTREAM END

DRAIN DETAIL

BAR z

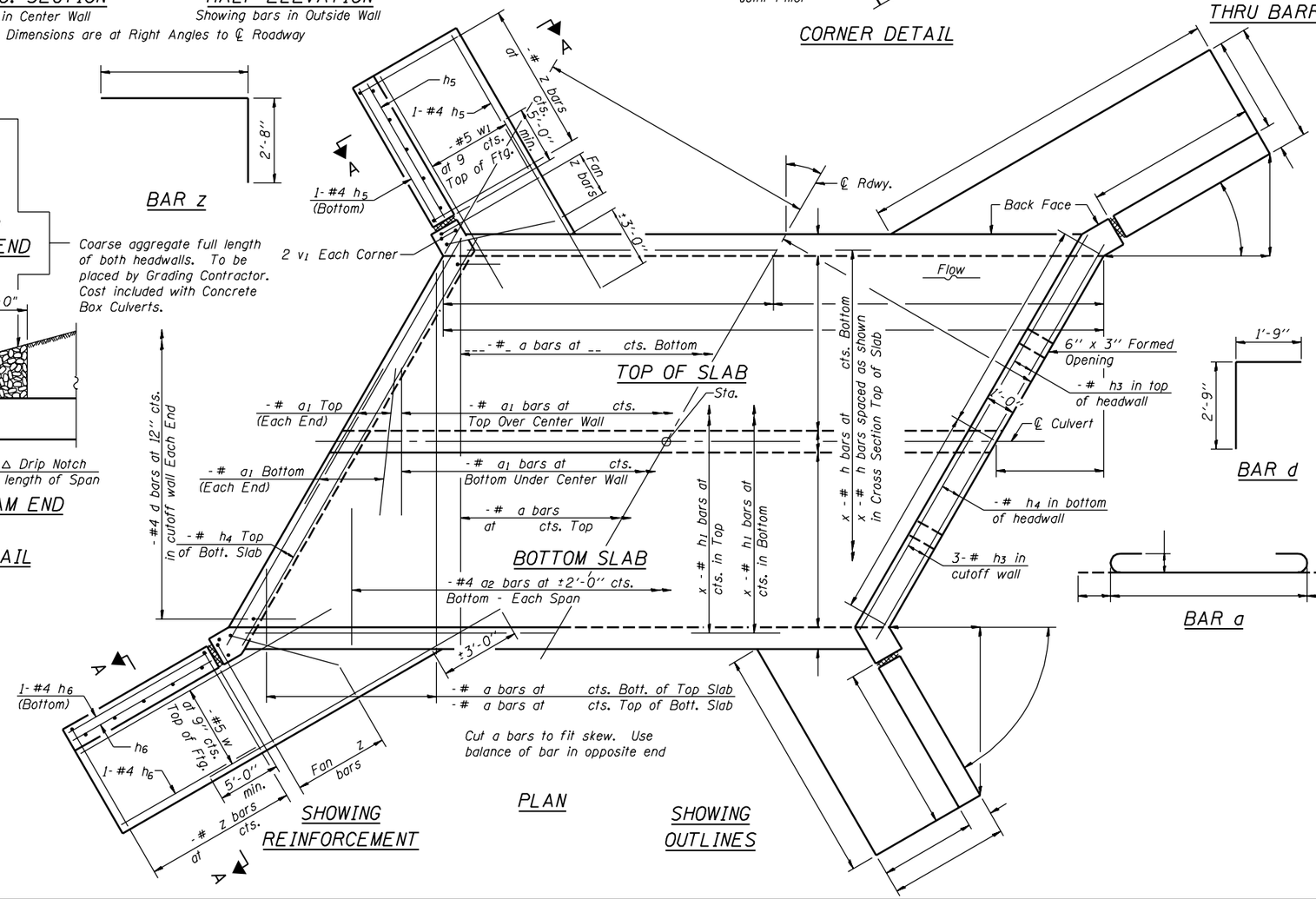

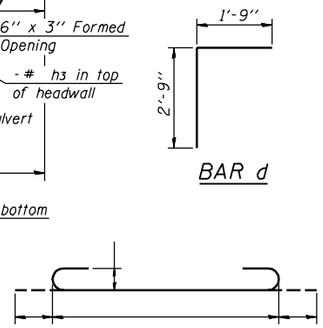

BAR d

BAR a

BILL OF MATERIAL

Bar	No.	Size	Length	Shape
a				
a1				
a2		#4		
d		#4	4'-6"	
h				
h1				
h2				
h3				
h4				
h5		#4		
h6		#4		
v				
v1				
v2				
v3				
v4				
v5(E)				
w		#5		
w1		#5		
z				
Concrete Box Culverts			Cu. Yd.	
Reinforcement Bars, Epoxy Coated			Pound	
Reinforcement Bars			Pound	

Notes:
Reinforcement bars designated (E) shall be epoxy coated.
Bars indicated thus 12x4-#5 etc. indicates 12 lines of bars with 4 lengths per line.

DESIGNED -	
CHECKED -	
DRAWN -	
CHECKED -	

- 200

EXAMINED

ENGINEER OF BRIDGE DESIGN

PASSED

ENGINEER OF BRIDGES AND STRUCTURES

DB-L-R 10-22-04

STATE OF ILLINOIS
DEPARTMENT OF TRANSPORTATION

ROUTE NO.	SECTION	COUNTY	TOTAL SHEETS	SHEET NO.
-				
-	-	-		
FED. ROAD DIST. NO. 7		ILLINOIS	FED. AID PROJECT-	

SHEET NO. -
- SHEETS

Contract #

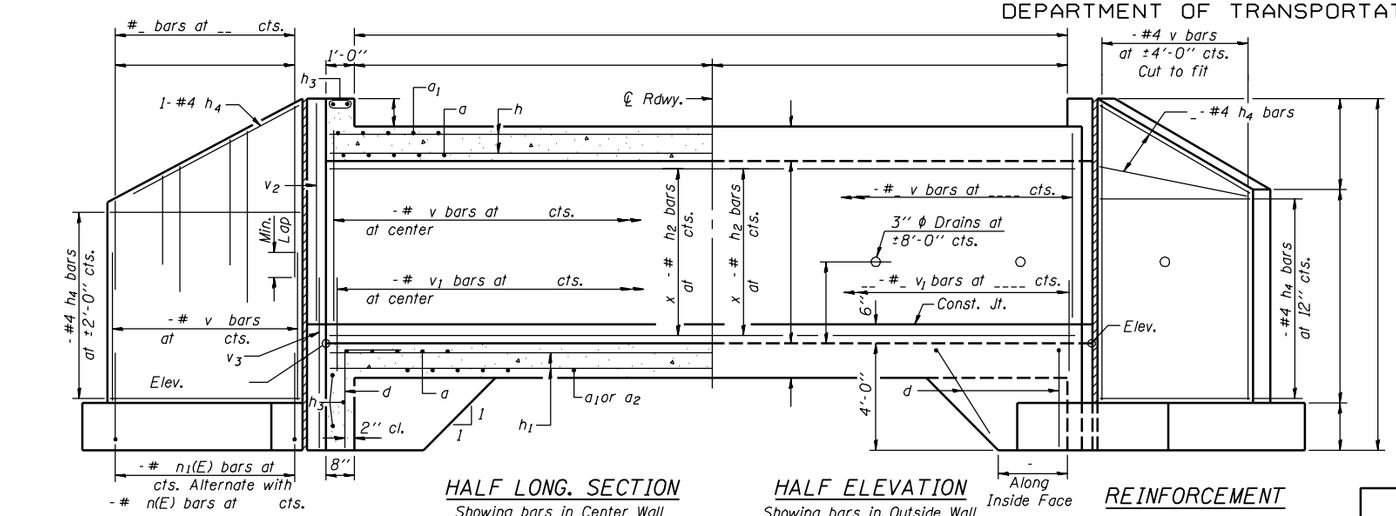

HALF LONG. SECTION
Showing bars in Center Wall

HALF ELEVATION
Showing bars in Outside Wall

REINFORCEMENT FRONT FACE

REINFORCEMENT BACK FACE

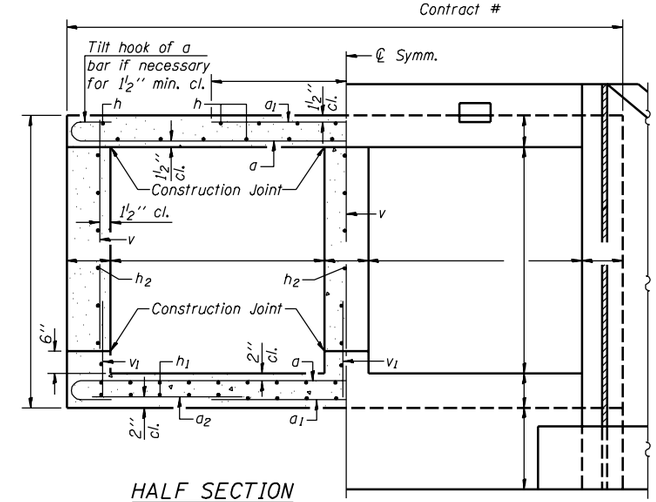

HALF SECTION THRU BARREL

HALF END ELEVATION

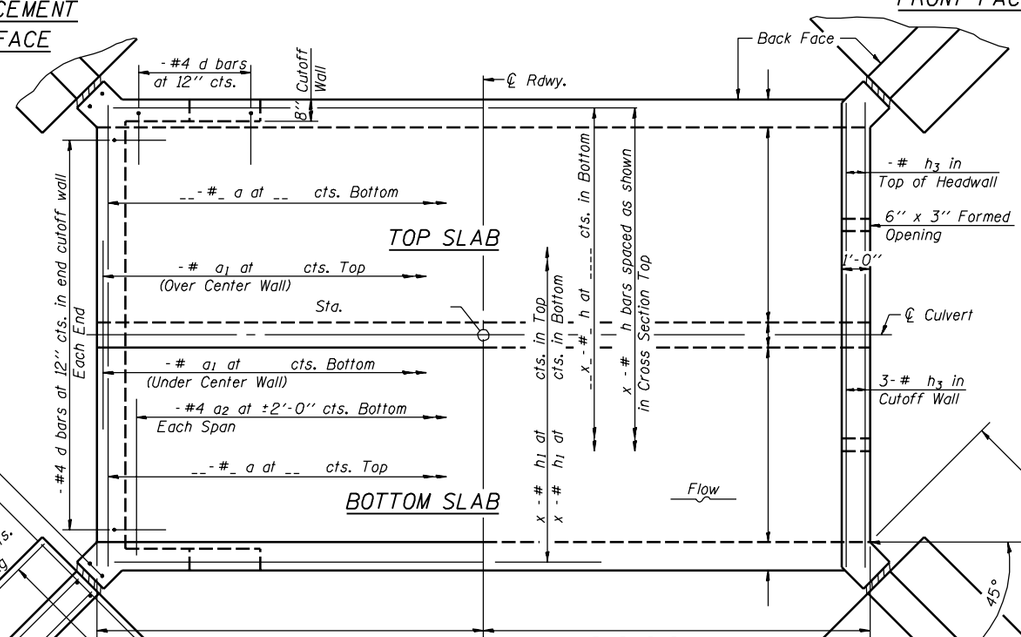

SHOWING REINFORCEMENT

SHOWING OUTLINES

PLAN

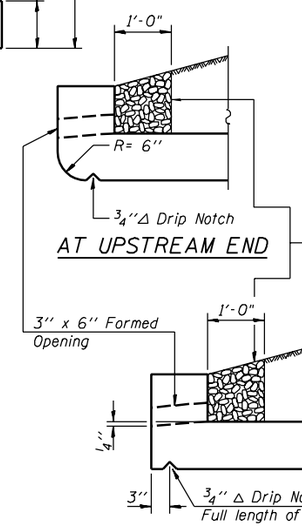

AT UPSTREAM END

Coarse aggregate full length of both headwalls. To be placed by Grading Contractor. Cost included with Concrete Box Culverts.

AT DOWNSTREAM END

DRAIN DETAIL

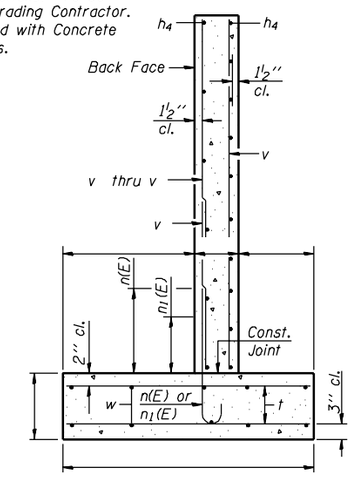

SECTION A-A

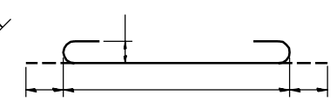

BAR a

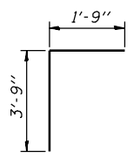

BAR d

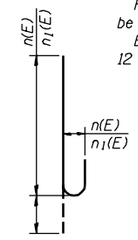

BARS n(E) and n1(E)

Notes:
Reinforcement bars designated (E) shall be epoxy coated.
Bars indicated thus 12x4-#5 etc. indicates 12 lines of bars with 4 lengths per line.

BILL OF MATERIAL

Bar	No.	Size	Length	Shape
a				
a1				
a2		#4		
d		#4	5'-6"	
h				
h1				
h2				
h3				
h4		#4		
n(E)				
n1(E)				
t				
v				
v1				
v2				
v3				
v4				
v5				
v6				
v7				
v8				
w		#5		
Concrete Box Culverts			Cu. Yd.	
Reinforcement Bars, Epoxy Coated			Pound	
Reinforcement Bars			Pound	

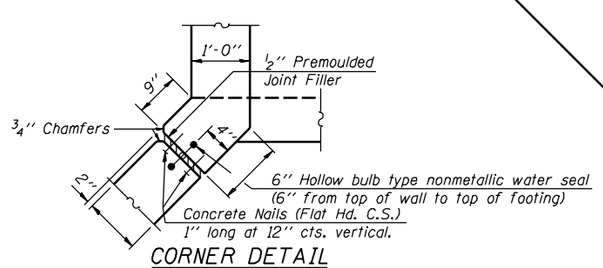

CORNER DETAIL

DESIGNED -	
CHECKED -	
DRAWN -	
CHECKED -	

- 200
EXAMINED
ENGINEER OF BRIDGE DESIGN
PASSED
ENGINEER OF BRIDGES AND STRUCTURES

DB-T-0 10-22-04

STATE OF ILLINOIS
DEPARTMENT OF TRANSPORTATION

ROUTE NO.	SECTION	COUNTY	TOTAL SHEETS	SHEET NO.
-				
-	-	-		
FED. ROAD DIST. NO. 7		ILLINOIS	FED. AID PROJECT-	

SHEET NO. -
- SHEETS

Contract #

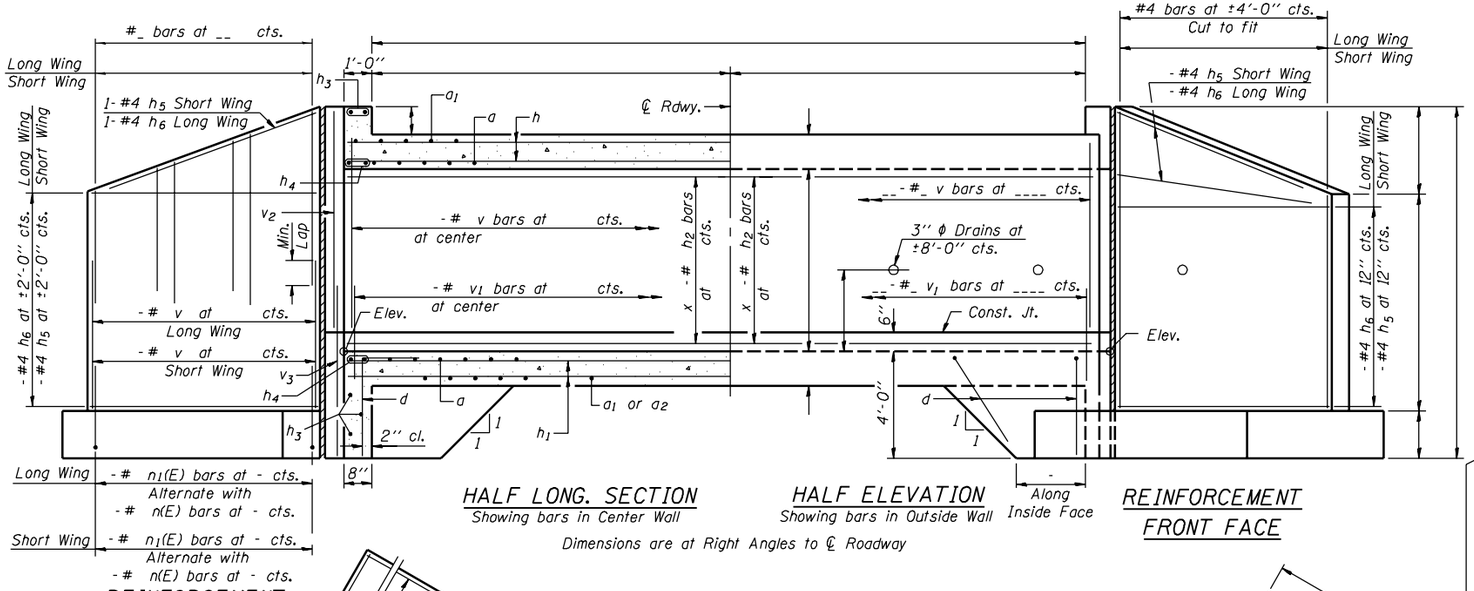

HALF LONG. SECTION
Showing bars in Center Wall

HALF ELEVATION
Showing bars in Outside Wall

REINFORCEMENT FRONT FACE

Dimensions are at Right Angles to ℄ Roadway

REINFORCEMENT BACK FACE

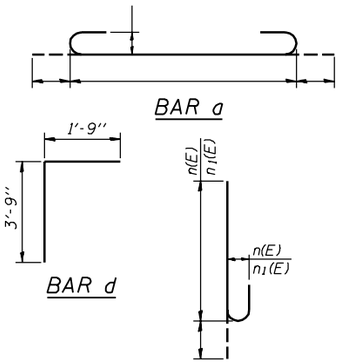

BAR a

BAR d

BARS n(E) and n1(E)

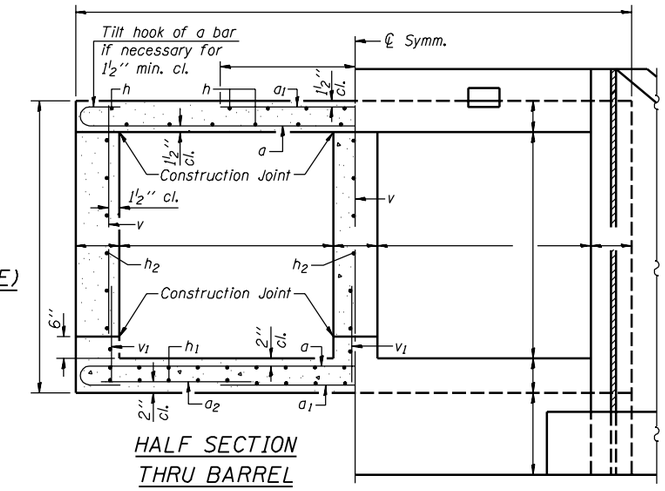

HALF SECTION THRU BARREL

HALF END ELEVATION

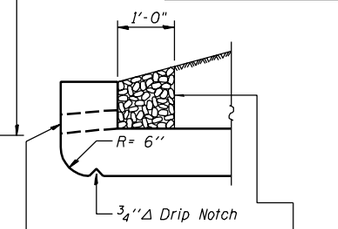

AT UPSTREAM END

Coarse aggregate full length of both headwalls. To be placed by Grading Contractor. Cost included with Concrete Box Culverts.

AT DOWNSTREAM END

DRAIN DETAIL

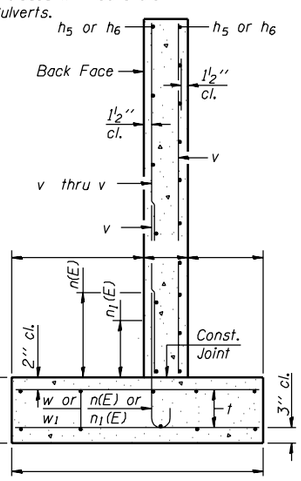

SECTION A-A

Notes:
Reinforcement bars designated (E) shall be epoxy coated.
Bars indicated thus 12x4-#5 etc. indicates 12 lines of bars with 4 lengths per line.

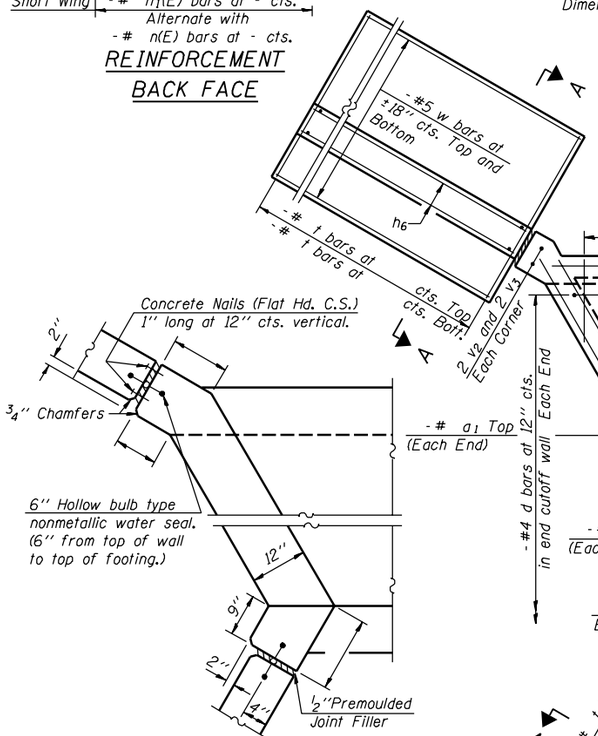

CORNER DETAIL

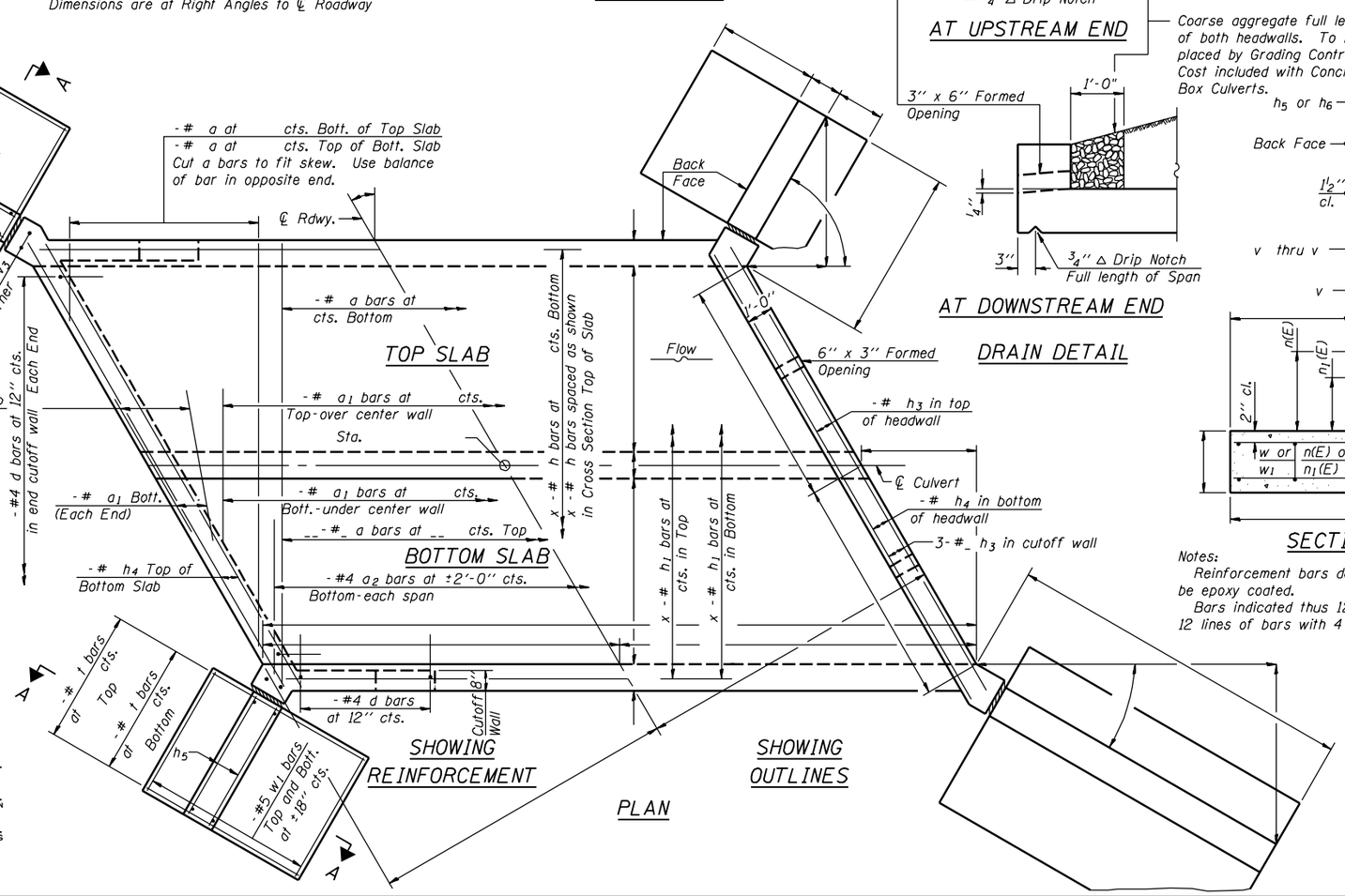

BILL OF MATERIAL

Bar	No.	Size	Length	Shape
a				
a1				
a2		#4		
d		#4	5'-6"	
h				
h1				
h2				
h3				
h4				
h5		#4		
h6		#4		
n(E)				
n1(E)				
t				
v				
v1				
v2				
v3				
v4				
v5				
v6				
v7				
v8				
w		#5		
w1		#5		
Concrete Box Culverts			Cu. Yd.	
Reinforcement Bars, Epoxy Coated			Pound	
Reinforcement Bars			Pound	

DESIGNED -	
CHECKED -	
DRAWN -	
CHECKED -	

- 200

EXAMINED

ENGINEER OF BRIDGE DESIGN

PASSED

ENGINEER OF BRIDGES AND STRUCTURES

DB-T-L 10-22-04

STATE OF ILLINOIS
DEPARTMENT OF TRANSPORTATION

ROUTE NO.	SECTION	COUNTY	TOTAL SHEETS	SHEET NO.
-				
-	-	-		
FED. ROAD DIST. NO. 7		ILLINOIS	FED. AID PROJECT-	

SHEET NO. -
- SHEETS

Contract #

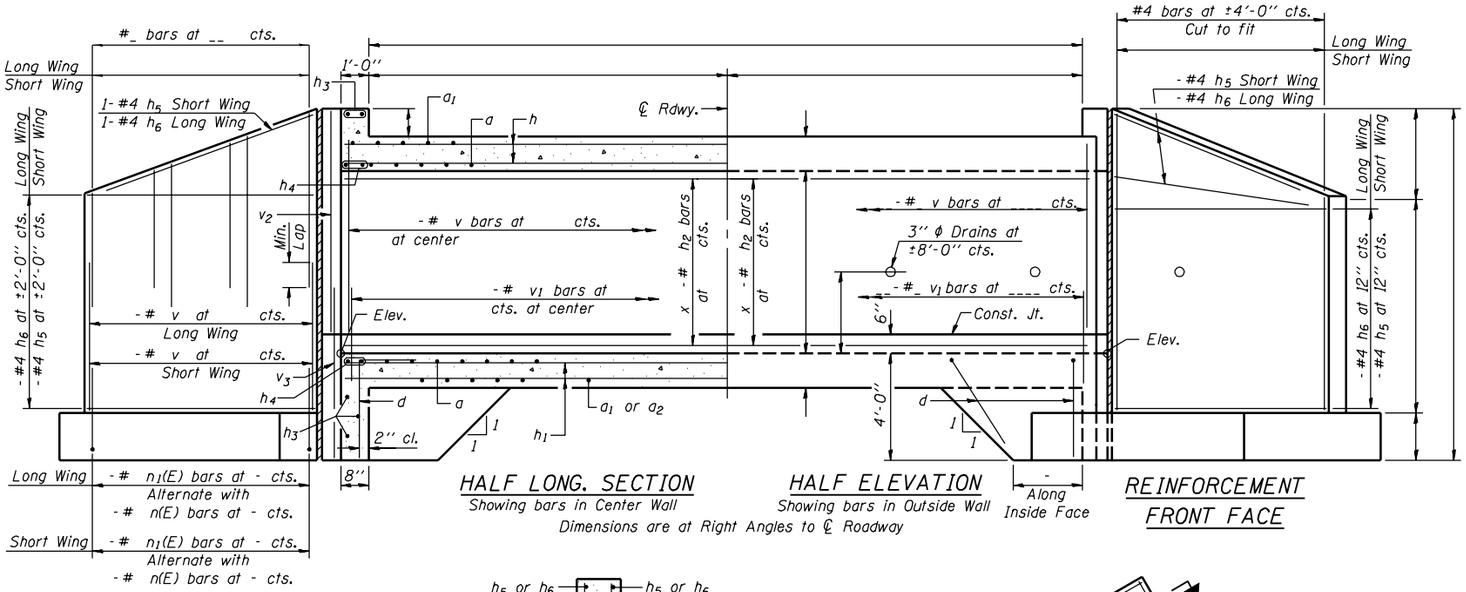

HALF LONG. SECTION
Showing bars in Center Wall

HALF ELEVATION
Showing bars in Outside Wall

REINFORCEMENT FRONT FACE

Dimensions are at Right Angles to ℄ Roadway

REINFORCEMENT BACK FACE

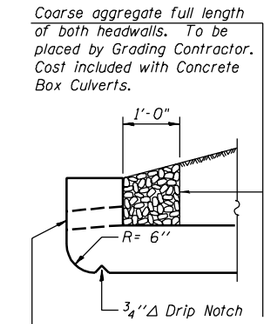

AT UPSTREAM END

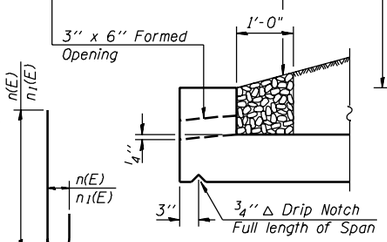

AT DOWNSTREAM END

DRAIN DETAIL

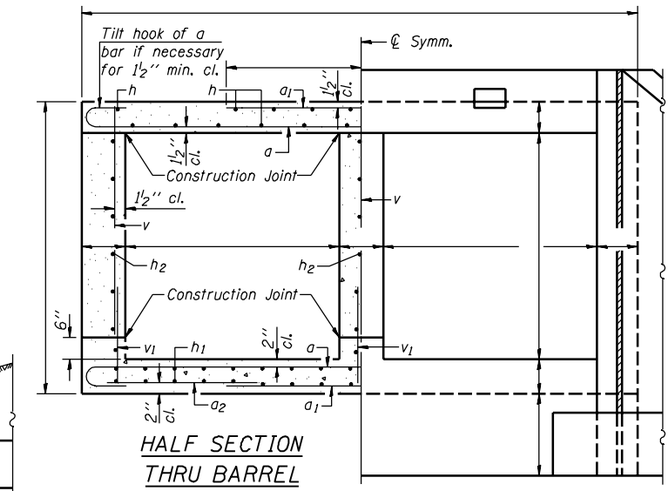

HALF SECTION THRU BARREL

HALF END ELEVATION

BARS n(E) and n_1(E)

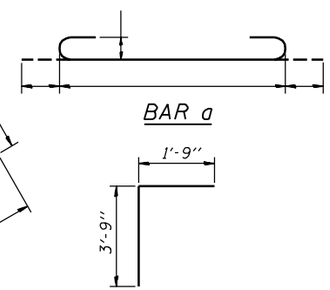

BAR a

BAR d

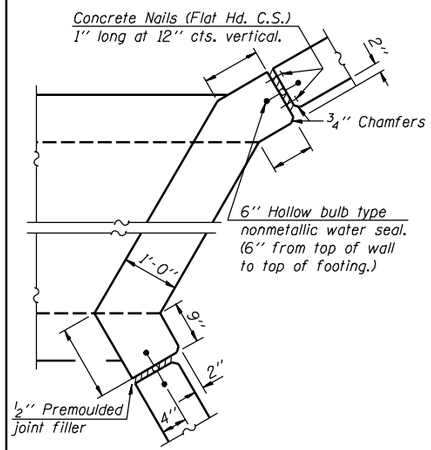

CORNER DETAIL

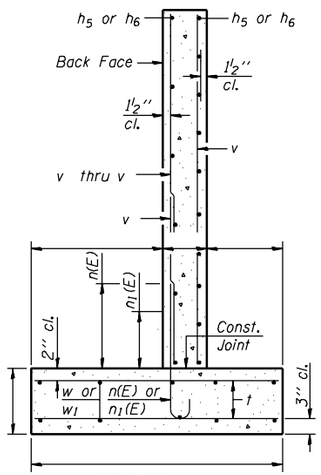

SECTION A-A

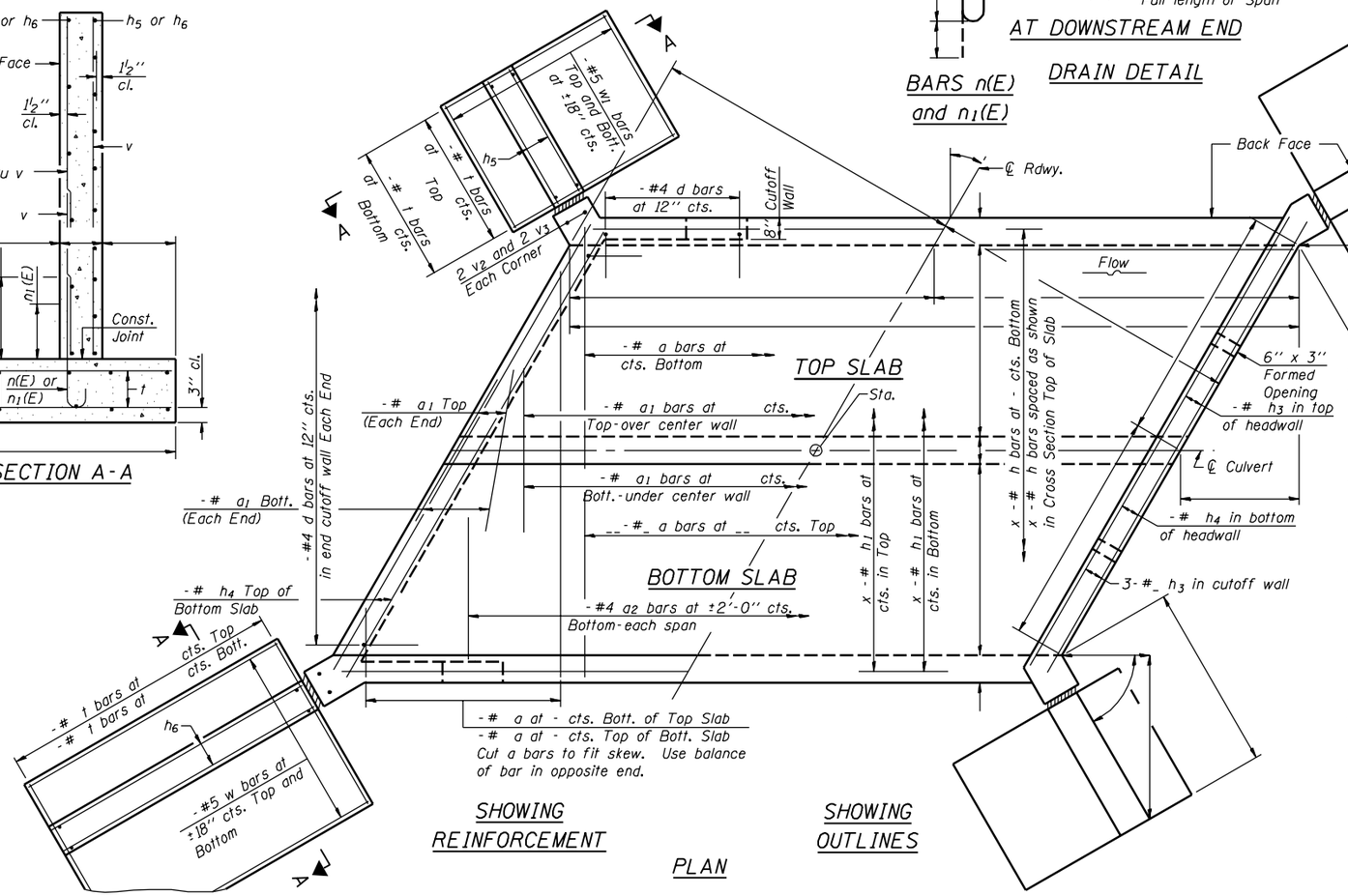

SHOWING REINFORCEMENT

SHOWING OUTLINES

PLAN

Notes:
Reinforcement bars designated (E) shall be epoxy coated.
Bars indicated thus 12x4-#5 etc. indicates 12 lines of bars with 4 lengths per line.

BILL OF MATERIAL

Bar	No.	Size	Length	Shape	Bar	No.	Size	Length	Shape
a					t				
a_1									
a_2		#4			v				
					v_1				
d		#4	5'-6"		v_2				
					v_3				
h					v_4				
h_1					v_5				
h_2					v_6				
h_3					v_7				
h_4					v_8				
h_5		#4							
h_6		#4			w		#5		
					w_1		#5		
n(E)									
n_1(E)									
Concrete Box Culverts								Cu. Yd.	
Reinforcement Bars, Epoxy Coated								Pound	
Reinforcement Bars								Pound	

DESIGNED -	
CHECKED -	
DRAWN -	
CHECKED -	

- 200

EXAMINED

ENGINEER OF BRIDGE DESIGN

PASSED

ENGINEER OF BRIDGES AND STRUCTURES

DB-T-R 10-22-04