CELL / MODEL NAME	DESCRIPTION	DATE
A-1	Pile bent abutment no skew	10/22/2004
A-1-D	Pile bent abutment details	10/22/2004
A-1-DSD	Pile bent abutment details with drilled shafts	10/22/2004
A-1-L (1 thru 14 degree skew)	Pile bent abutment ahead left (1 thru 14 degree skew)	10/22/2004
A-1-L (15 thru 34 degree skew)	Pile bent abutment ahead left (15 thru 34 degree skew)	10/22/2004
A-1-L (35 thru 60 degree skew)	Pile bent abutment ahead left (35 thru 60 degree skew)	10/22/2004
A-1-R (1 thru 14 degree skew)	Pile bent abutment ahead right (1 thru 14 degree skew)	10/22/2004
A-1-R (15 thru 34 degree skew)	Pile bent abutment ahead right (15 thru 34 degree skew)	10/22/2004
A-1-R (35 thru 60 degree skew)	Pile bent abutment ahead right (35 thru 60 degree skew)	10/22/2004
ABB-1	Anchor bolt details	10/22/2004
AI-0	Integral abutment no skew	10/22/2004
AI-L	Integral abutment ahead left	10/22/2004
AI-R	Integral abutment ahead right	10/22/2004
AV-I-0	Vaulted abutment no skew with PPC I beams	10/22/2004
AV-I-L	Vaulted abutment ahead left with PPC I beams	10/22/2004
AV-I-R	Vaulted abutment ahead right with PPC I beams	10/22/2004
AV-IW-LR	Vaulted abutment skewed with PPC I beams	10/22/2004
AV-IW-O	Vaulted abutment no skew with PPC I beams	10/22/2004
AV-S-0	Vaulted abutment no skew sand filled	10/22/2004
AV-S-L	Vaulted abutment ahead left sand filled	10/22/2004
AV-S-R	Vaulted abutment ahead right sand filled	10/22/2004
P-1	Solid straight stem pier	10/22/2004
P-2	Single hammerhead pier	10/22/2004
P-3	Double hammerhead pier	10/22/2004
P-4	Double hammerhead pier (alternate)	10/22/2004
P-5	Three column pier	10/22/2004
P-6	Multiple column pier	10/22/2004
P-7	Trapezoidal pier	10/22/2004
P-10	Single hammerhead pier (modified)	10/22/2004
P-11	Two column trapezoidal pier	10/22/2004
P-12	Three column trapezoidal pier	10/22/2004
P-13	Four column trapezoidal pier	10/22/2004
P-14	Five column trapezoidal pier	10/22/2004
P-24	Four column pier (over railroad)	10/22/2004
P-26	Six column pier (over railroad)	10/22/2004
P-DS	Drilled shaft pier	10/22/2004

CELL / MODEL NAME	DESCRIPTION	DATE
P-DSCW	Drilled shaft pier with crashwall	10/22/2004
P-DSSW	Drilled shaft pier (solid)	10/22/2004
P-DSTB	Drilled shaft pier with transfer beam	10/22/2004
P-DSWW	Drilled shaft pier with webwall	10/22/2004
PB-1	Solid battered stem pier	10/22/2004
PC-1	Solid straight stem pier with cap	10/22/2004
X-3	Concrete piles (five alternates)	10/22/2004
X-PB	Concrete piles (two alternates)	10/22/2004

STATE OF ILLINOIS
DEPARTMENT OF TRANSPORTATION

ROUTE NO.	SECTION	COUNTY	TOTAL SHEETS	SHEET NO.
-				
-	-	-		
FED. ROAD DIST. NO. 7	ILLINOIS	FED. AID PROJECT-		

SHEET NO. -
- SHEETS

Contract #

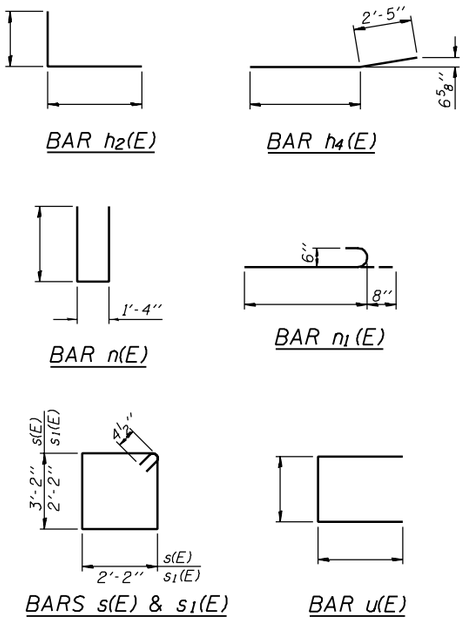

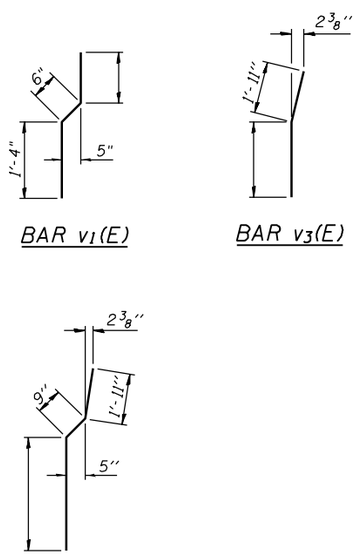

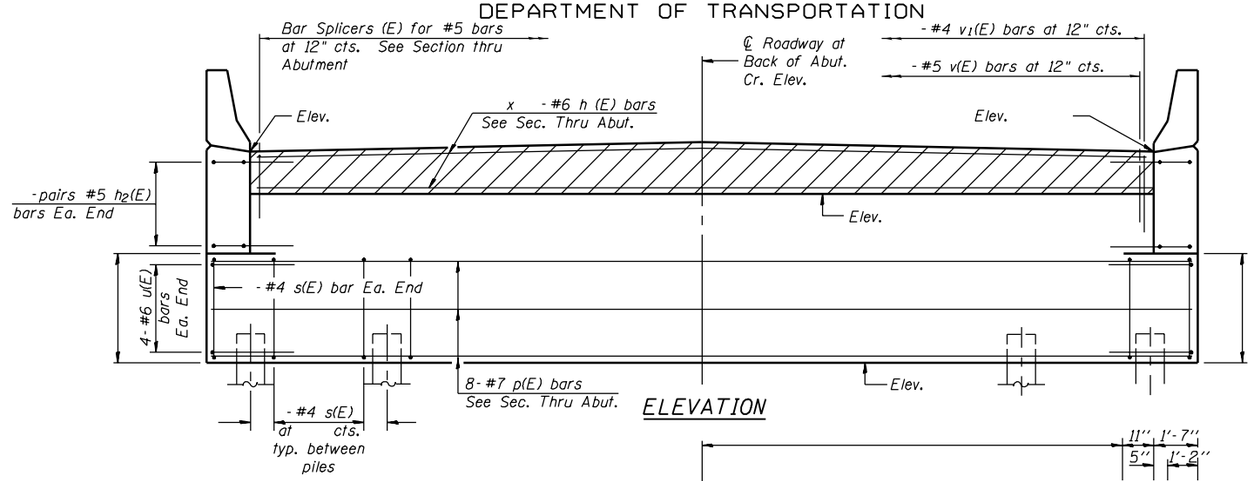

ELEVATION

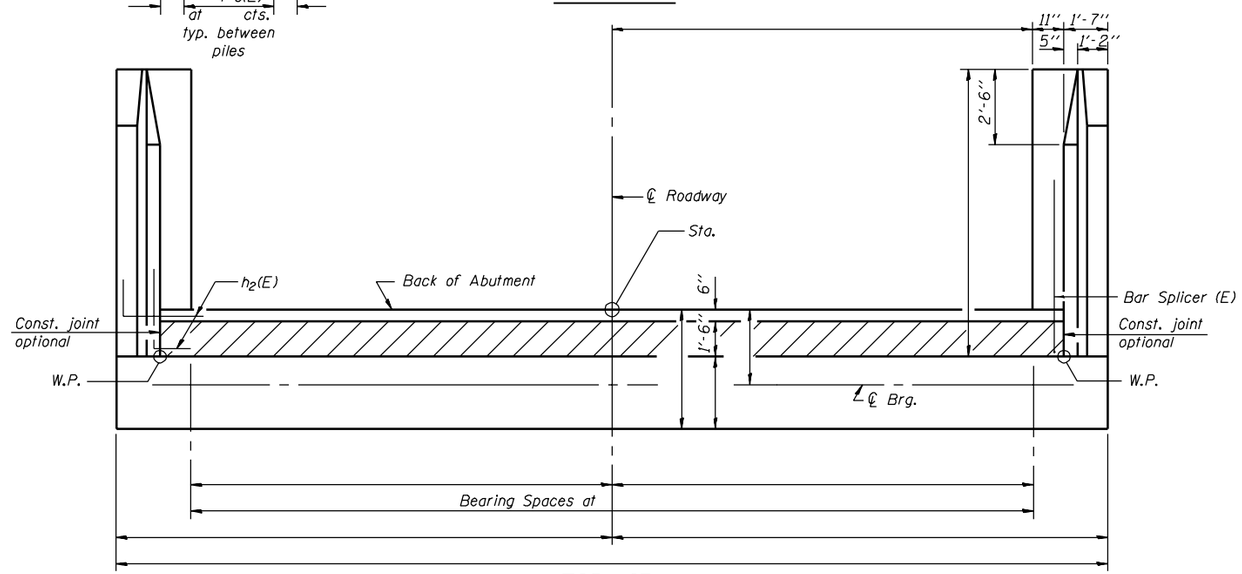

TOP VIEW

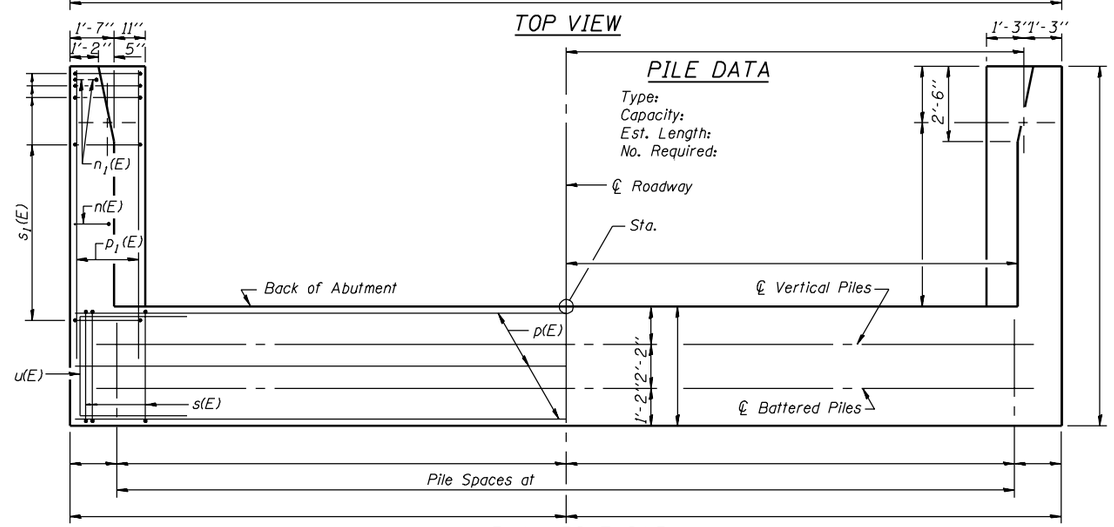

PLAN-PILE CAP

ABUTMENT BILL OF MATERIAL

Bar	No.	Size	Length	Shape
h(E)		#5		
h1(E)		#5		
h2(E)		#5		
h3(E)		#4		
h4(E)		#4		
n(E)		#6		
n1(E)		#6		
p(E)		#7		
p1(E)		#7		
s(E)		#4		
s1(E)		#4		
u(E)		#6		
v(E)		#5		
v1(E)		#4		
v2(E)		#6		
v3(E)		#6		
v4(E)		#6		
Structure Excavation		Cu. Yd.		
Concrete Structures		Cu. Yd.		
Reinforcement Bars, Epoxy Coated		Pound		
Piles		Foot		
Test Piles		Each		

Reinforcement bars designated (E) shall be epoxy coated.
For details of Bar Splicers, see sheet of .

DESIGNED -	
CHECKED -	
DRAWN -	
CHECKED -	

- 200
EXAMINED
ENGINEER OF BRIDGE DESIGN
PASSED
ENGINEER OF BRIDGES AND STRUCTURES

A-1 10-22-04

STATE OF ILLINOIS
DEPARTMENT OF TRANSPORTATION

ROUTE NO.	SECTION	COUNTY	TOTAL SHEETS	SHEET NO.
-				
-	-	-		
FED. ROAD DIST. NO. 7		ILLINOIS	FED. AID PROJECT-	

SHEET NO. -
- SHEETS

Contract #

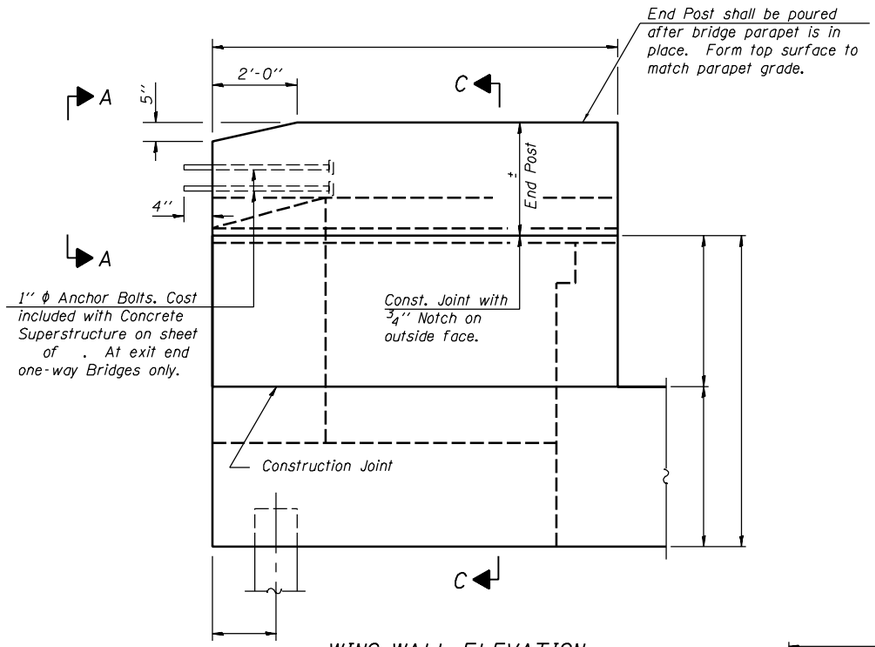

WING WALL ELEVATION
Showing Dimensions

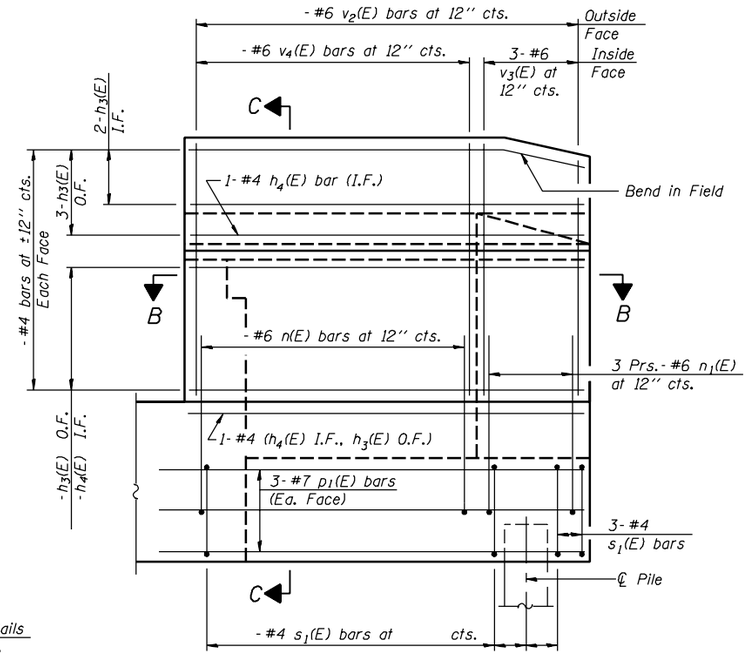

WING WALL ELEVATION
Showing Reinforcement

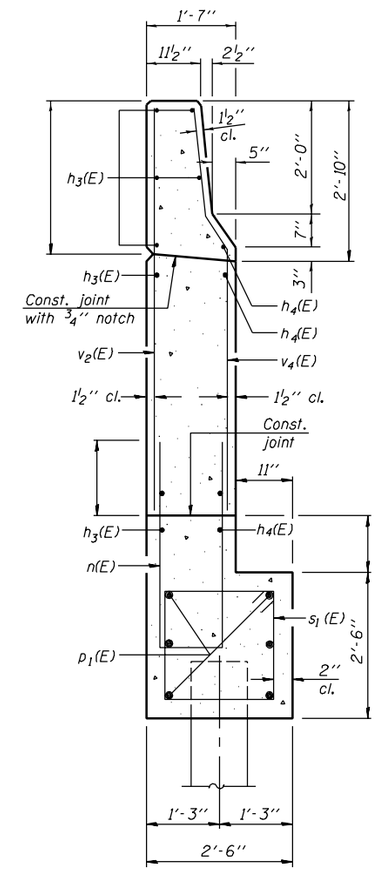

SECTION C-C

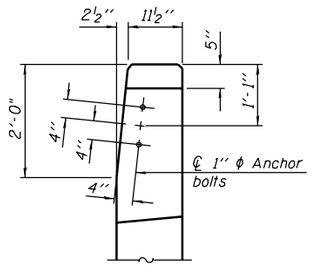

VIEW A-A

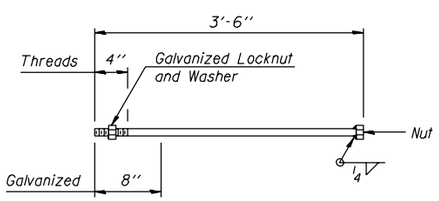

1" ϕ ANCHOR BOLT

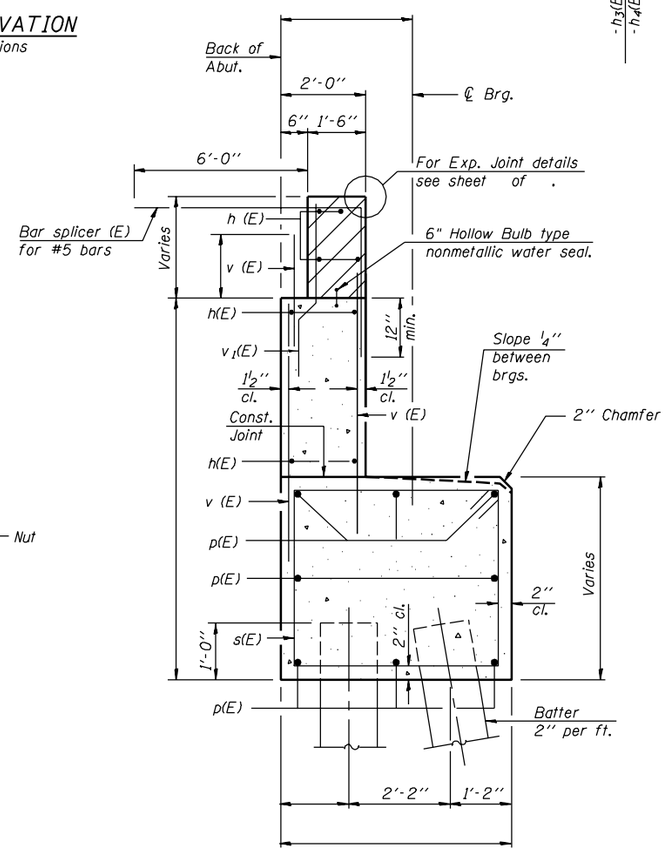

SEC. THRU ABUT.

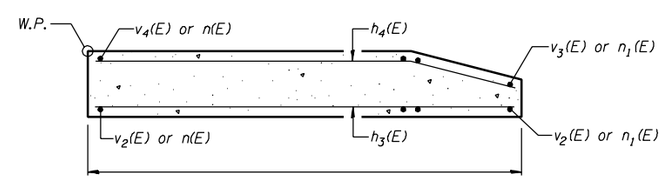

SEC. B-B

Notes: Hatched area to be poured after superstructure forms have been removed. Quantity of concrete included with Concrete Superstructure.
Space reinforcement in cap to miss anchor bolts.
Pour steps monolithically with cap.
Reinforcement bars designated (E) shall be epoxy coated.
Quantity of concrete in end post included with Concrete Superstructure on sheet of .

DESIGNED -	
CHECKED -	
DRAWN -	
CHECKED -	

- 200
EXAMINED
ENGINEER OF BRIDGE DESIGN
PASSED
ENGINEER OF BRIDGES AND STRUCTURES

A-1-D 10-22-04

STATE OF ILLINOIS
DEPARTMENT OF TRANSPORTATION

ROUTE NO.	SECTION	COUNTY	TOTAL SHEETS	SHEET NO.
-				
-	-	-		
FED. ROAD DIST. NO. 7		ILLINOIS	FED. AID PROJECT-	

SHEET NO. -
- SHEETS

Contract #

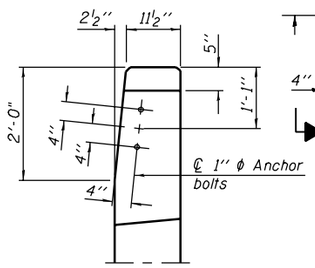

VIEW A-A

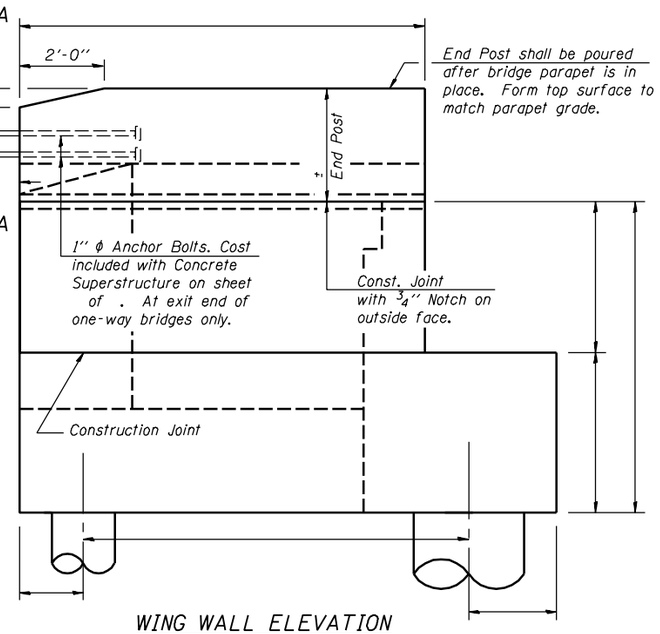

WING WALL ELEVATION
Showing Dimensions

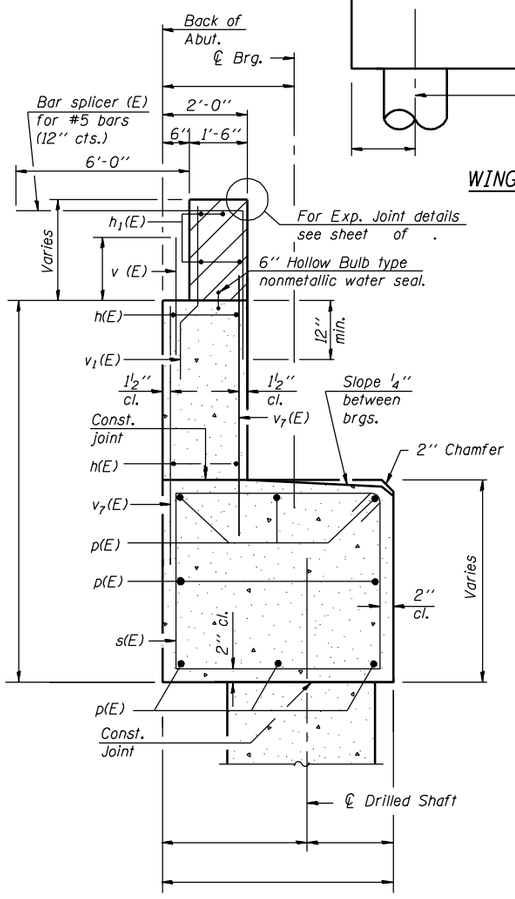

SECTION THRU ABUTMENT

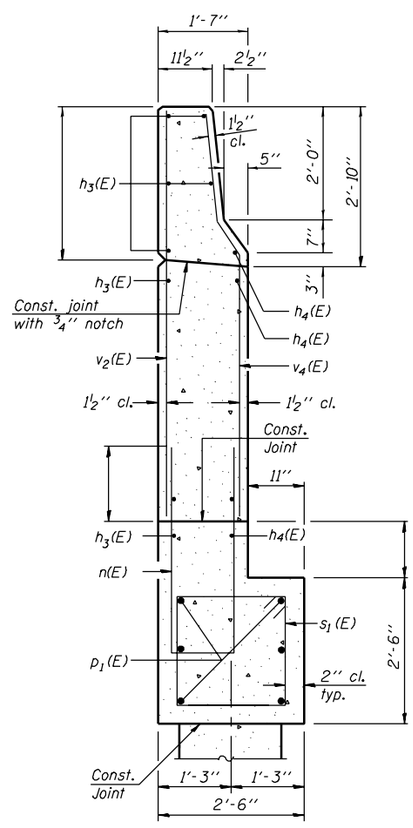

SECTION B-B

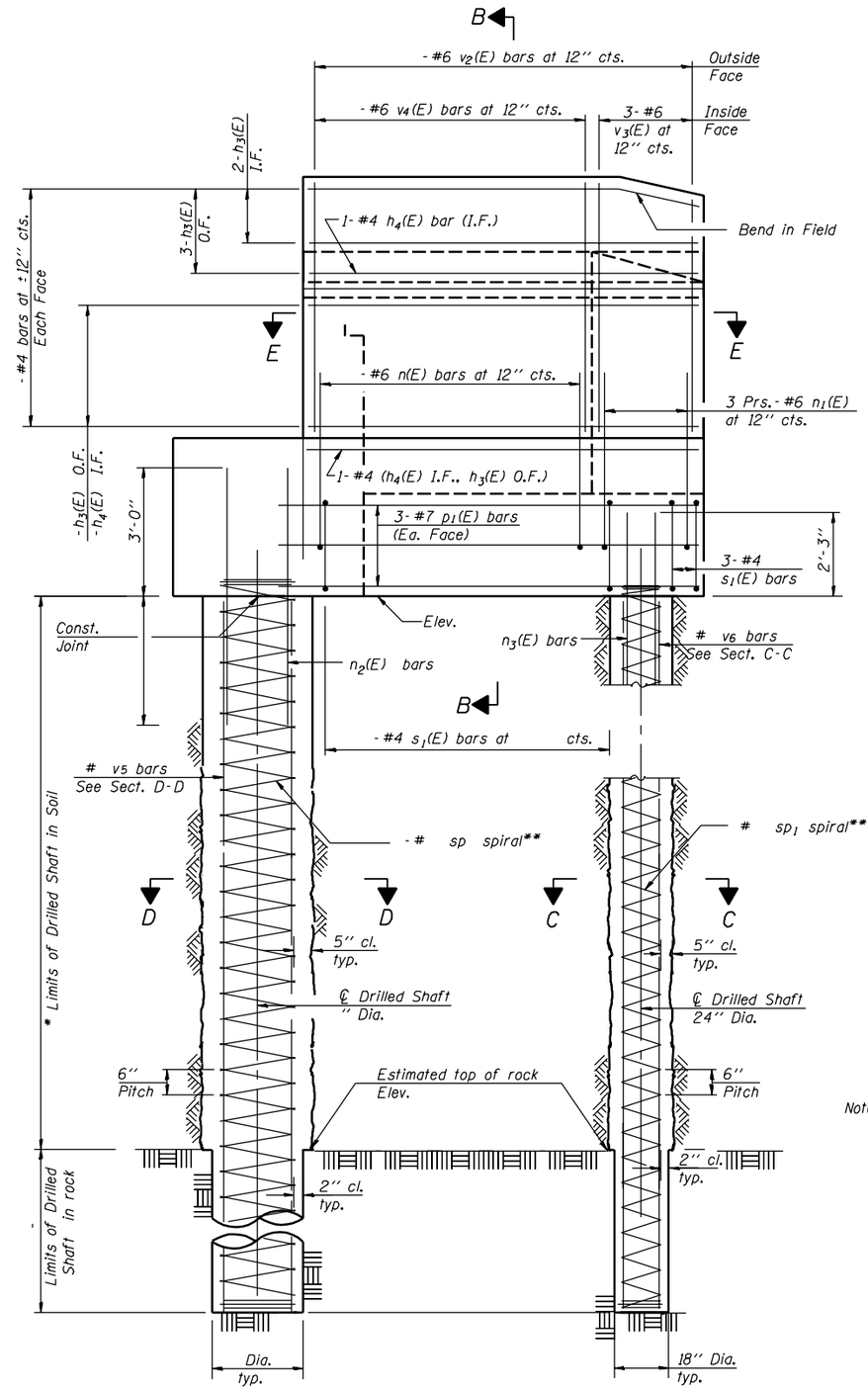

WING WALL & DRILLED SHAFT ELEVATION
Showing Reinforcement

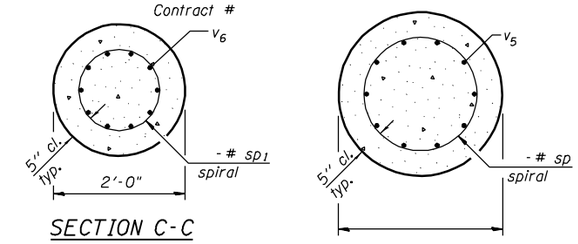

SECTION C-C

SECTION D-D

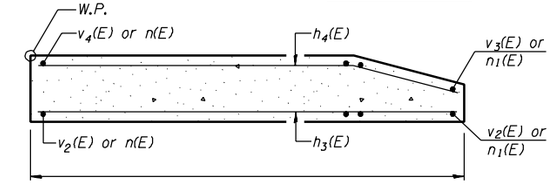

SECTION E-E

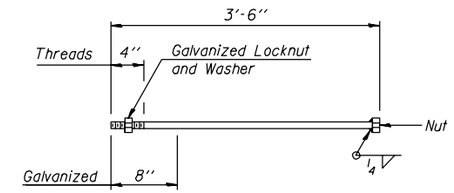

1'' ϕ ANCHOR BOLT

Notes: * The quantities and detailing are based on the estimated elevations shown on the plans. The actual elevations may differ at each shaft and corresponding adjustments shall be made to the drilled shaft and reinforcement quantities and payment limits.
Reinforcement bars designated (E) shall be epoxy coated.
Quantity of concrete in end post included with Concrete Superstructure on sheet of .
** Provide 1½ extra turns top and bottom of each drilled shaft. Extend spiral 2'' into abutment or wingwall cap. Provide min. 4-#4 spacers or equivalent.
Min. lap for spirals = .

DESIGNED -	- 200
CHECKED -	EXAMINED
DRAWN -	ENGINEER OF BRIDGE DESIGN
CHECKED -	PASSED
	ENGINEER OF BRIDGES AND STRUCTURES

A-1-DSD 10-22-04

STATE OF ILLINOIS
DEPARTMENT OF TRANSPORTATION

ROUTE NO.	SECTION	COUNTY	TOTAL SHEETS	SHEET NO.
-				
-	-	-		
FED. ROAD DIST. NO. 7		ILLINOIS	FED. AID PROJECT-	

SHEET NO. -
- SHEETS

Contract #

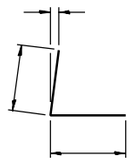

BAR $h_1(E)$

BAR $h_2(E)$

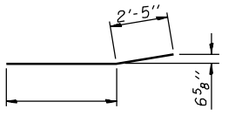

BAR $h_4(E)$

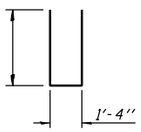

BAR n(E)

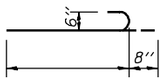

BAR $n_1(E)$

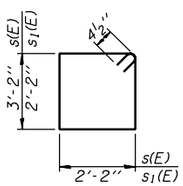

BARS s(E) & $s_1(E)$

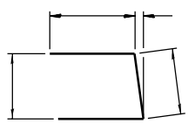

BAR u(E)

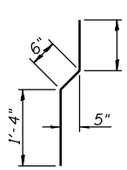

BAR $v_1(E)$

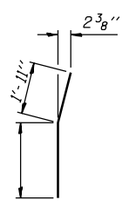

BAR $v_3(E)$

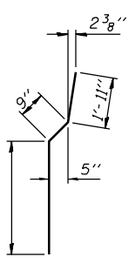

BAR $v_4(E)$

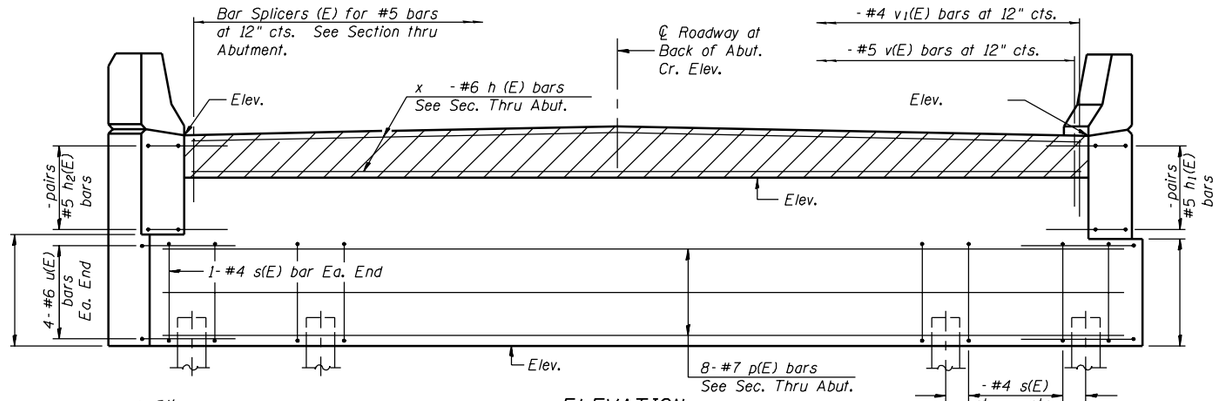

ELEVATION

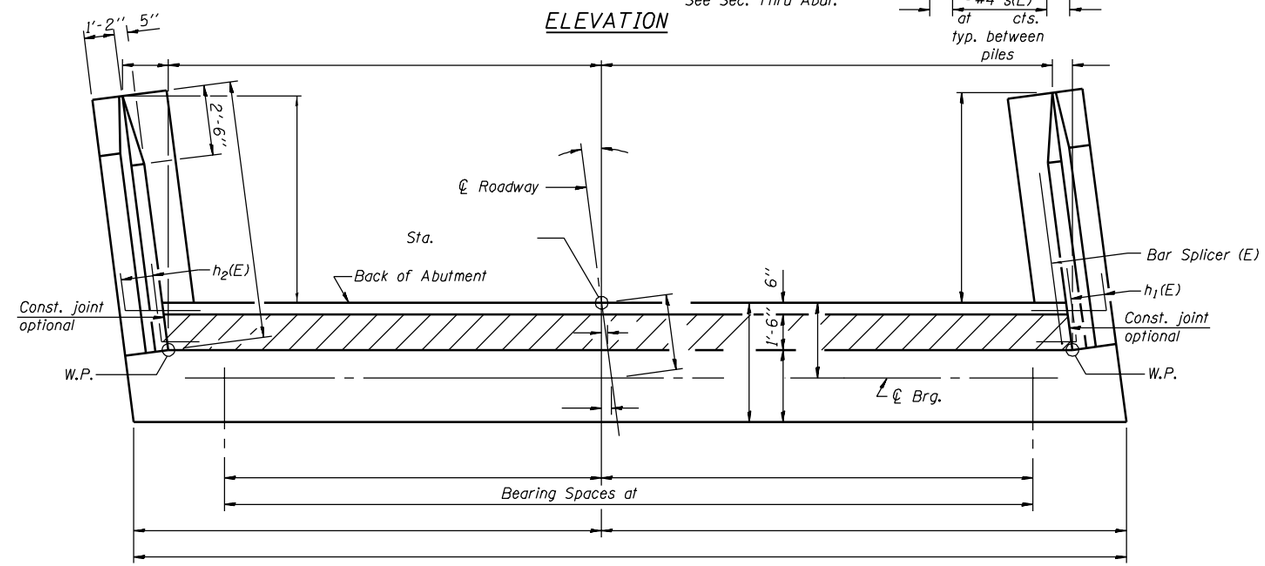

TOP VIEW

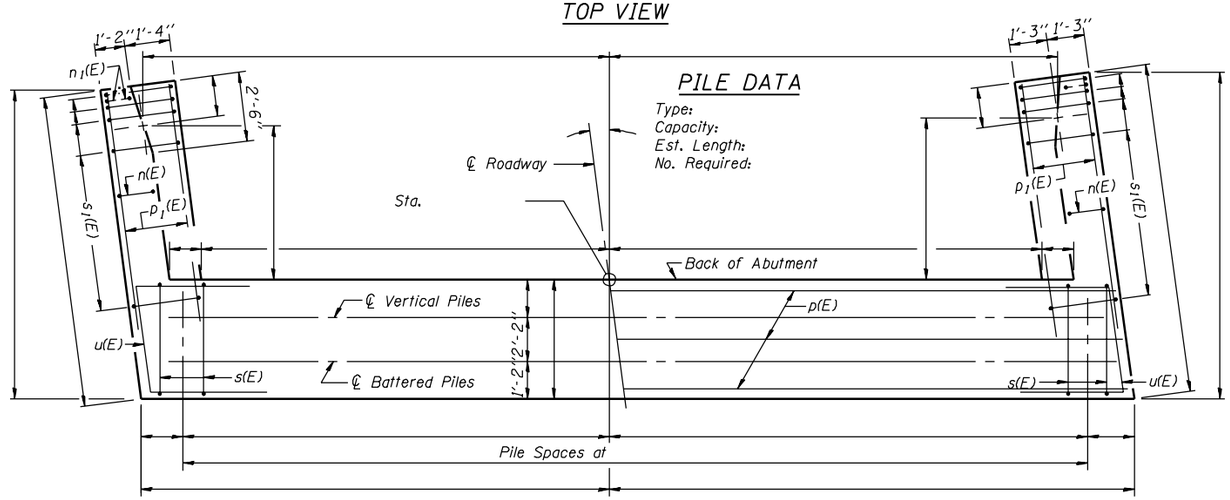

PILE DATA

Type:
Capacity:
Est. Length:
No. Required:

PLAN-PILE CAP

ABUTMENT BILL OF MATERIAL

Bar	No.	Size	Length	Shape
h(E)		#5		
$h_1(E)$		#5		
$h_2(E)$		#5		
$h_3(E)$		#4		
$h_4(E)$		#4		
n(E)		#6		
$n_1(E)$		#6		
p(E)		#7		
$p_1(E)$		#7		
s(E)		#4		
$s_1(E)$		#4		
u(E)		#6		
v(E)		#5		
$v_1(E)$		#4		
$v_2(E)$		#6		
$v_3(E)$		#6		
$v_4(E)$		#6		
Structure Excavation		Cu. Yd.		
Concrete Structures		Cu. Yd.		
Reinforcement Bars, Epoxy Coated		Pound		
Piles		Foot		
Test Piles		Each		

Reinforcement bars designated (E) shall be epoxy coated.
For details of Bar Splicers, see sheet of .

DESIGNED -	- 200
CHECKED -	EXAMINED
DRAWN -	PASSED ENGINEER OF BRIDGE DESIGN
CHECKED -	ENGINEER OF BRIDGES AND STRUCTURES

A-1-L (1°-14°) 10-22-04

STATE OF ILLINOIS
DEPARTMENT OF TRANSPORTATION

ROUTE NO.	SECTION	COUNTY	TOTAL SHEETS	SHEET NO.
-				
-	-	-		
FED. ROAD DIST. NO. 7	ILLINOIS	FED. AID PROJECT-		

SHEET NO. -
- SHEETS

Contract #

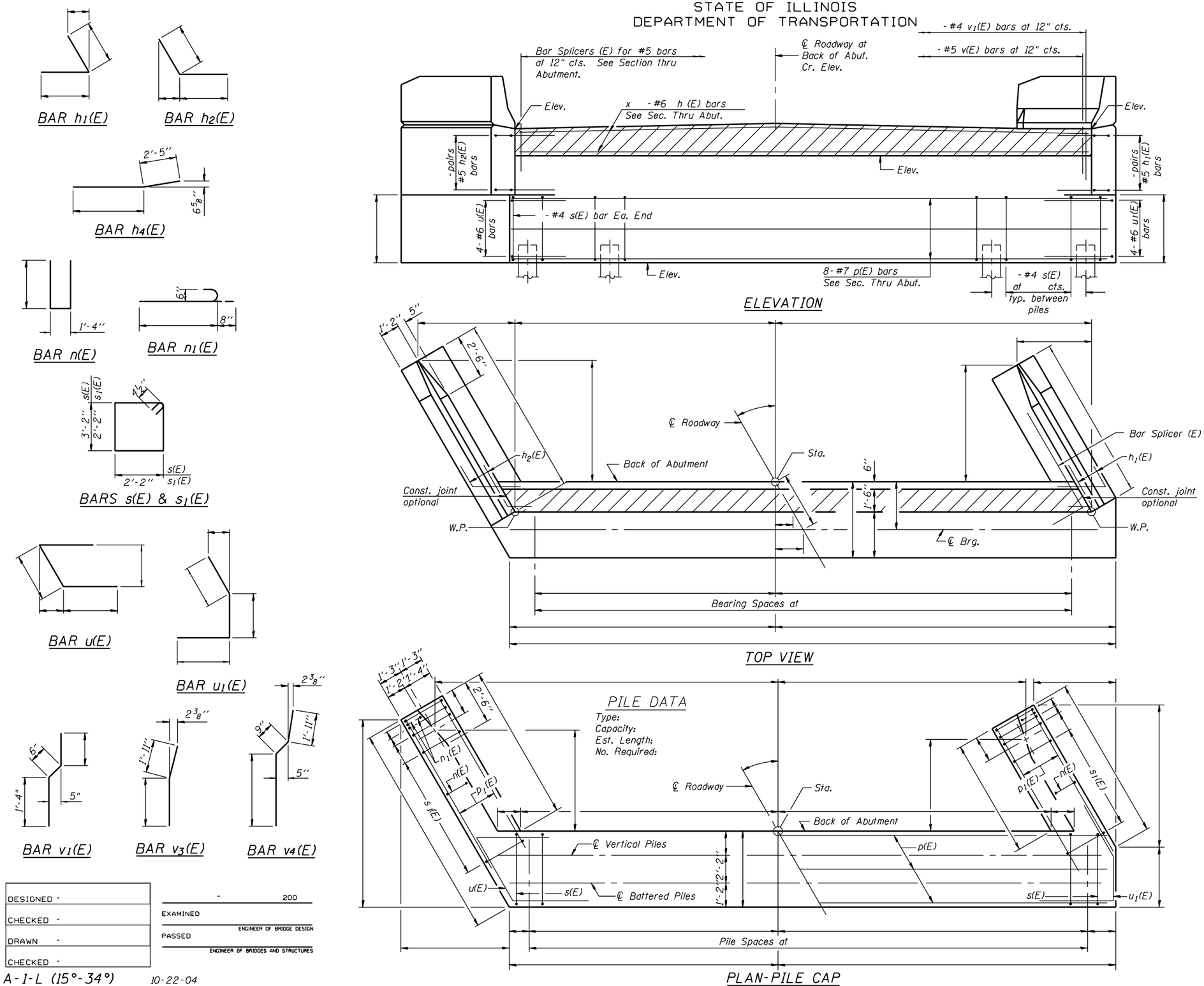

ABUTMENT BILL OF MATERIAL

Bar	No.	Size	Length	Shape
h(E)		#5		
h_1(E)		#5		
h_2(E)		#5		
h_3(E)		#4		
h_4(E)		#4		
n(E)		#6		
n_1(E)		#6		
p(E)		#7		
p_1(E)		#7		
s(E)		#4		
s_1(E)		#4		
u(E)		#6		
u_1(E)		#6		
v(E)		#5		
v_1(E)		#4		
v_2(E)		#6		
v_3(E)		#6		
v_4(E)		#6		
Structure Excavation		Cu. Yd.		
Concrete Structures		Cu. Yd.		
Reinforcement Bars, Epoxy Coated		Pound		
Piles		Foot		
Test Piles		Each		

Reinforcement bars designated (E) shall be epoxy coated.
For details of Bar Splicers, see sheet of .

DESIGNED -	- 200
CHECKED -	EXAMINED
DRAWN -	ENGINEER OF BRIDGE DESIGN
CHECKED -	PASSED
	ENGINEER OF BRIDGES AND STRUCTURES

A-1-L (15°-34°) 10-22-04

STATE OF ILLINOIS
DEPARTMENT OF TRANSPORTATION

ROUTE NO.	SECTION	COUNTY	TOTAL SHEETS	SHEET NO.
-				
-	-	-		
FED. ROAD DIST. NO. 7	ILLINOIS	FED. AID PROJECT-		

SHEET NO. -
- SHEETS

Contract #

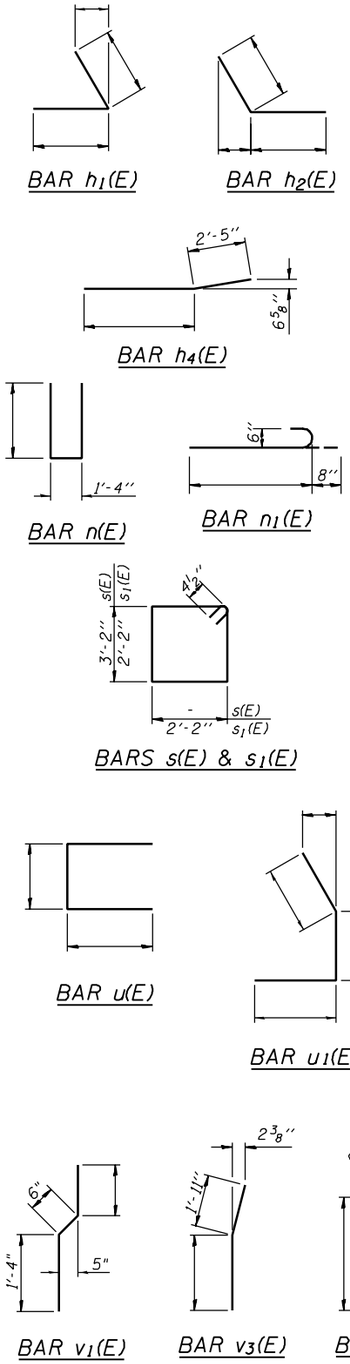

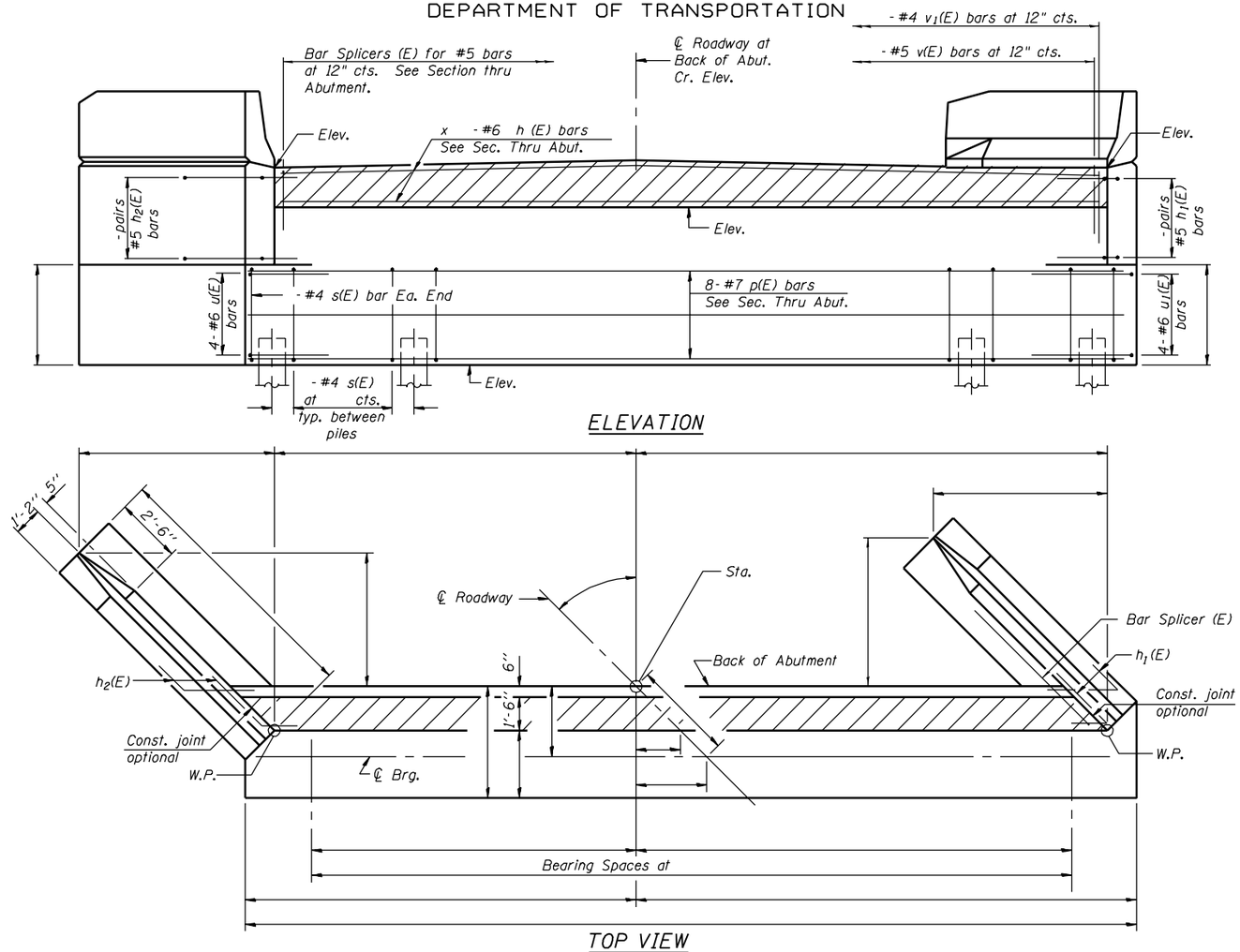

ABUTMENT BILL OF MATERIAL

Bar	No.	Size	Length	Shape
h(E)		#5		
h_1(E)		#5		
h_2(E)		#5		
h_3(E)		#4		
h_4(E)		#4		
n(E)		#6		
n_1(E)		#6		
p(E)		#7		
p_1(E)		#7		
s(E)		#4		
s_1(E)		#4		
u(E)		#6		
u_1(E)		#6		
v(E)		#4		
v_2(E)		#6		
v_3(E)		#6		
v_4(E)		#6		
v_1(E)		#4		
Structure Excavation			Cu. Yd.	
Concrete Structures			Cu. Yd.	
Reinforcement Bars, Epoxy Coated			Pound	
Piles			Foot	
Test Piles			Each	

Reinforcement bars designated (E) shall be epoxy coated.
For details of Bar Splicers, see sheet of .

DESIGNED -	
CHECKED -	
DRAWN -	
CHECKED -	

- 200

EXAMINED
ENGINEER OF BRIDGE DESIGN
PASSED
ENGINEER OF BRIDGES AND STRUCTURES

A-1-L (35°-60°) 10-22-04

STATE OF ILLINOIS
DEPARTMENT OF TRANSPORTATION

ROUTE NO.	SECTION	COUNTY	TOTAL SHEETS	SHEET NO.
-				
-	-	-		
FED. ROAD DIST. NO. 7		ILLINOIS	FED. AID PROJECT-	

SHEET NO. -
- SHEETS

Contract #

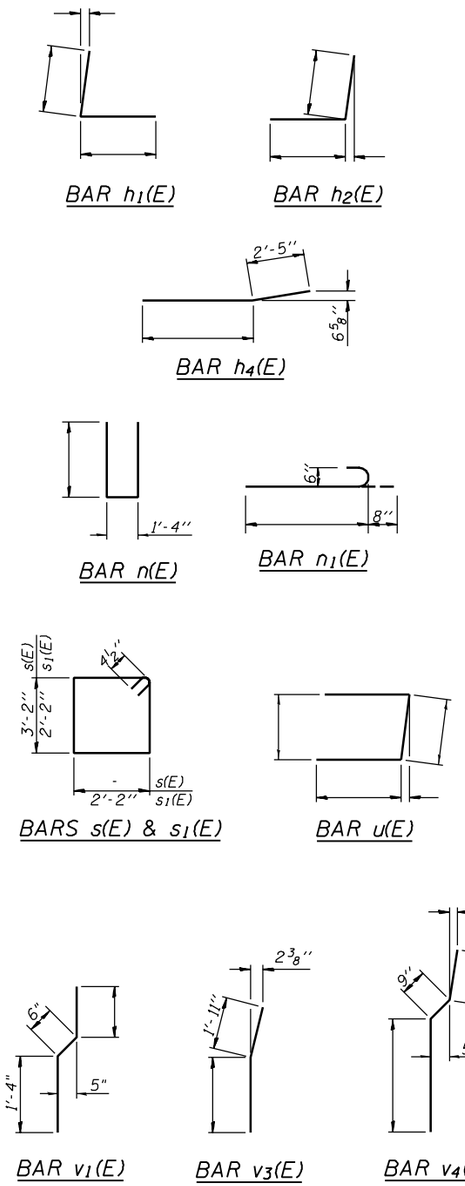

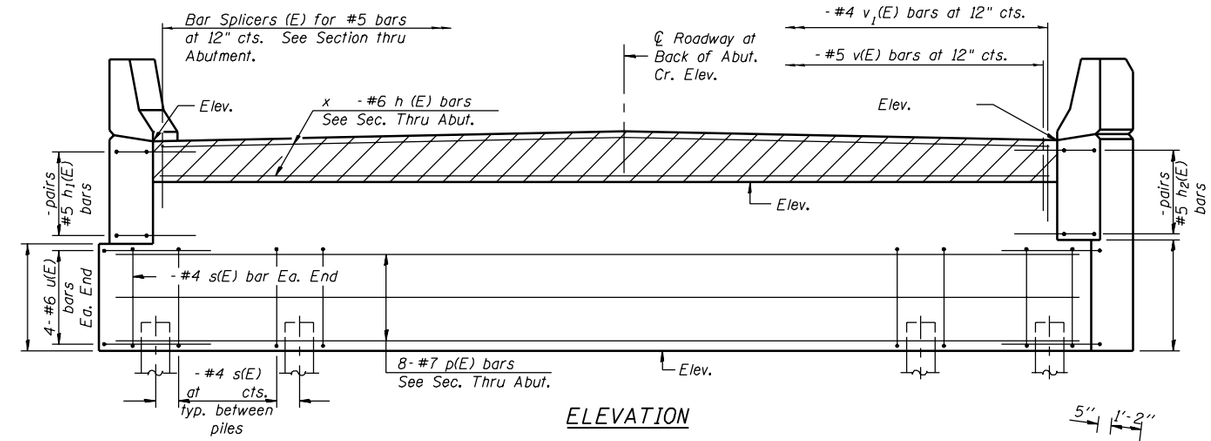

ELEVATION

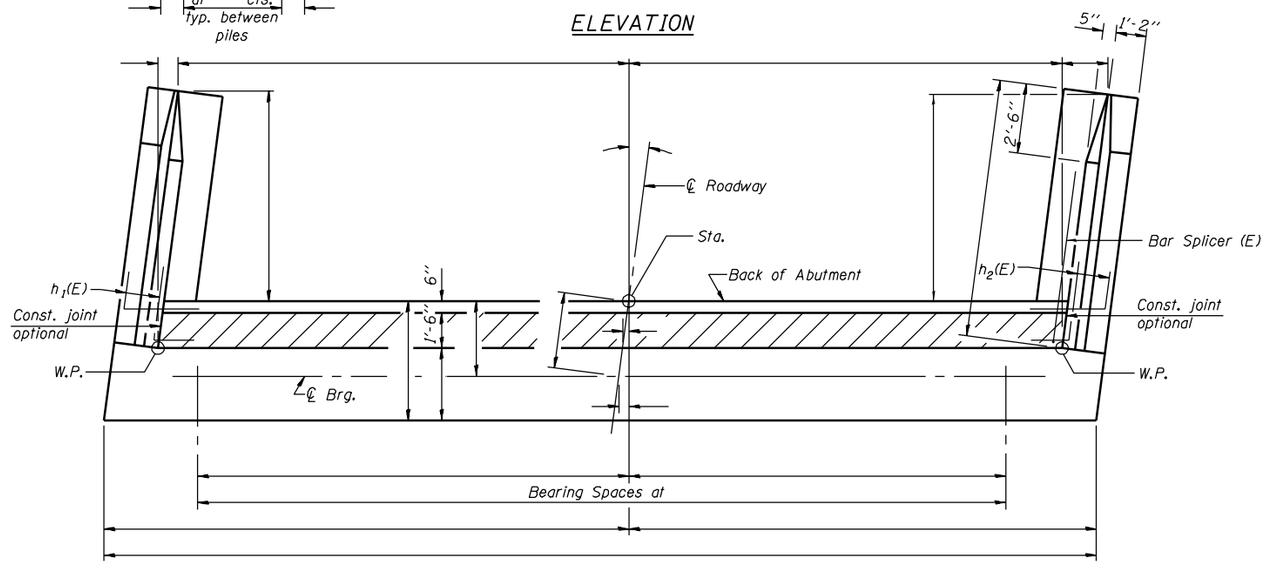

TOP VIEW

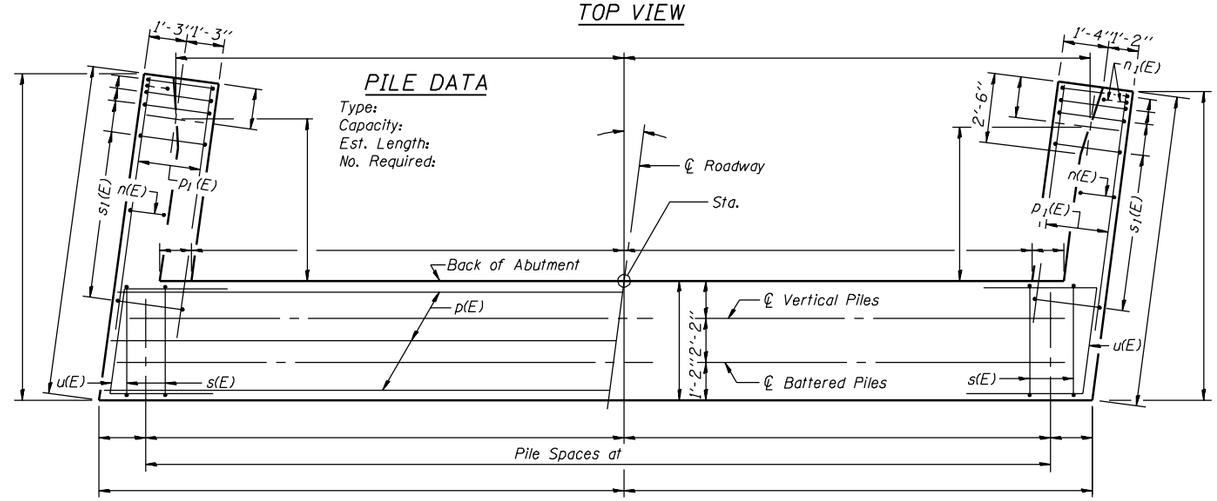

PLAN-PILE CAP

ABUTMENT BILL OF MATERIAL

Bar	No.	Size	Length	Shape
h(E)		#5		
h_1(E)		#5		
h_2(E)		#5		
h_3(E)		#4		
h_4(E)		#4		
n(E)		#6		
n_1(E)		#6		
p(E)		#7		
p_1(E)		#7		
s(E)		#4		
s_1(E)		#4		
u(E)		#6		
v(E)		#5		
v_1(E)		#4		
v_2(E)		#6		
v_3(E)		#6		
v_4(E)		#6		
Structure Excavation			Cu. Yd.	
Concrete Structures			Cu. Yd.	
Reinforcement Bars, Epoxy Coated			Pound	
Piles			Foot	
Test Piles			Each	

Reinforcement bars designated (E) shall be epoxy coated.
For details of Bar Splicers, see sheet of .

DESIGNED -	- 200
CHECKED -	EXAMINED
DRAWN -	ENGINEER OF BRIDGE DESIGN
CHECKED -	PASSED
	ENGINEER OF BRIDGES AND STRUCTURES

A-1-R (1°-14°) 10-22-04

STATE OF ILLINOIS
DEPARTMENT OF TRANSPORTATION

ROUTE NO.	SECTION	COUNTY	TOTAL SHEETS	SHEET NO.
-				
-	-	-		
FED. ROAD DIST. NO. 7		ILLINOIS	FED. AID PROJECT-	

SHEET NO. -
- SHEETS

Contract #

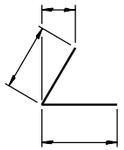

BAR $h_1(E)$

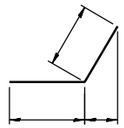

BAR $h_2(E)$

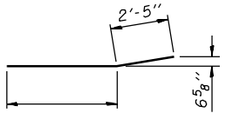

BAR $h_4(E)$

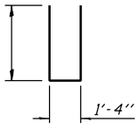

BAR n(E)

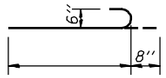

BAR $n_1(E)$

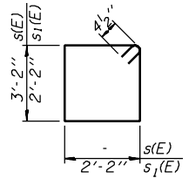

BARS s(E) & $s_1(E)$

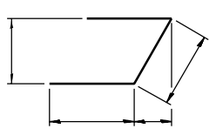

BAR u(E)

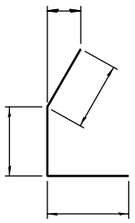

BAR $u_1(E)$

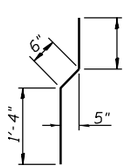

BAR $v_1(E)$

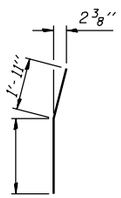

BAR $v_3(E)$

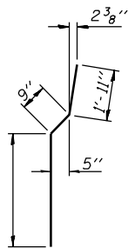

BAR $v_4(E)$

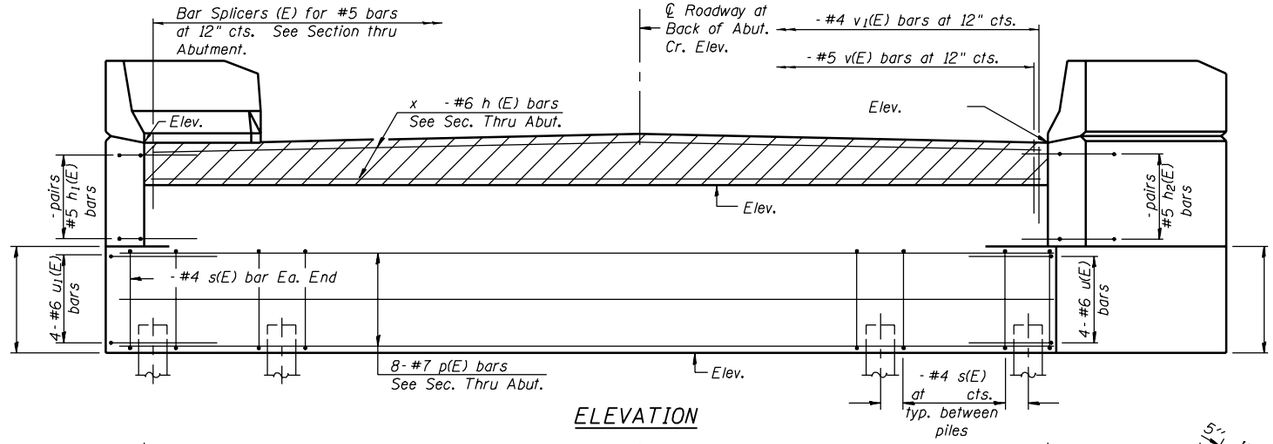

ELEVATION

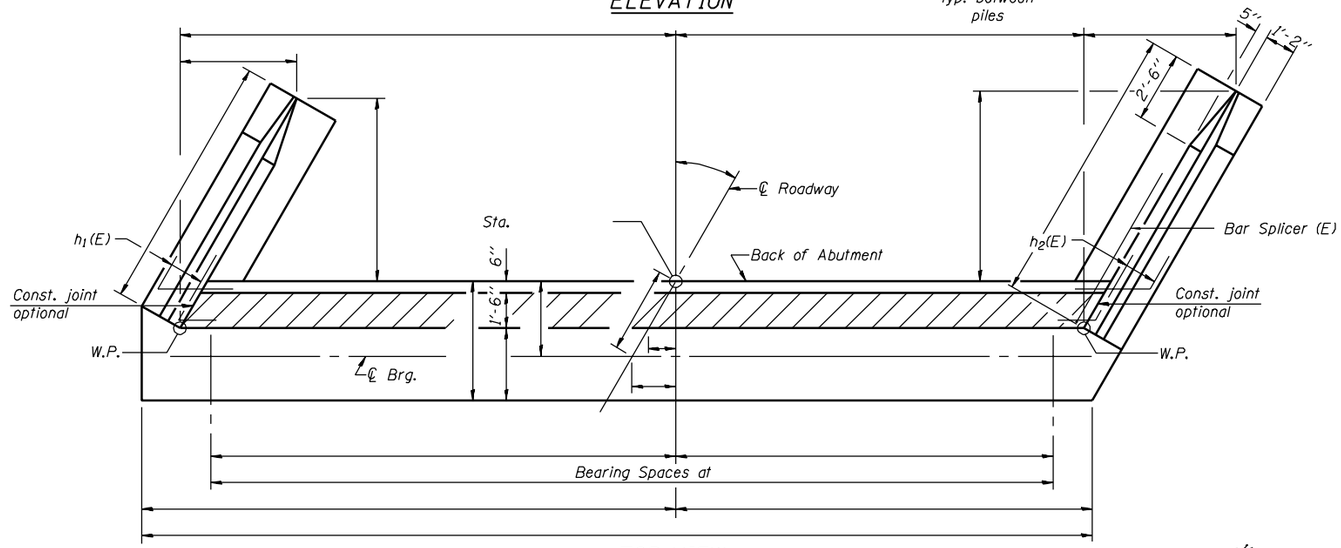

TOP VIEW

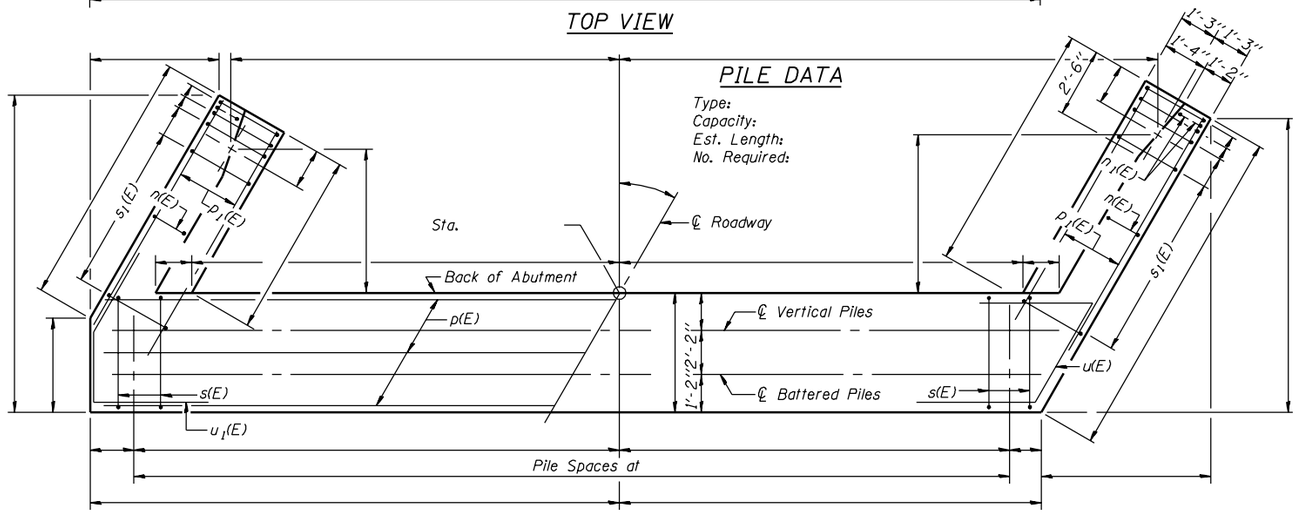

PLAN-PILE CAP

ABUTMENT BILL OF MATERIAL

Bar	No.	Size	Length	Shape
h(E)		#5		
$h_1(E)$		#5		
$h_2(E)$		#5		
$h_3(E)$		#4		
$h_4(E)$		#4		
n(E)		#6		
$n_1(E)$		#6		
p(E)		#7		
$p_1(E)$		#7		
s(E)		#4		
$s_1(E)$		#4		
u(E)		#6		
$u_1(E)$		#6		
v(E)		#5		
$v_1(E)$		#4		
$v_2(E)$		#6		
$v_3(E)$		#6		
$v_4(E)$		#6		
Structure Excavation		Cu. Yd.		
Concrete Structures		Cu. Yd.		
Reinforcement Bars, Epoxy Coated		Pound		
Piles		Foot		
Test Piles		Each		

Reinforcement bars designated (E) shall be epoxy coated.
For details of Bar Splicers, see sheet of .

DESIGNED -	- 200
CHECKED -	EXAMINED
DRAWN -	ENGINEER OF BRIDGE DESIGN
CHECKED -	PASSED
	ENGINEER OF BRIDGES AND STRUCTURES

A-1-R (15°-34°) 10-22-04

STATE OF ILLINOIS
DEPARTMENT OF TRANSPORTATION

ROUTE NO.	SECTION	COUNTY	TOTAL SHEETS	SHEET NO.
-				
-	-	-		
FED. ROAD DIST. NO. 7		ILLINOIS	FED. AID PROJECT-	

SHEET NO. -
- SHEETS

Contract #

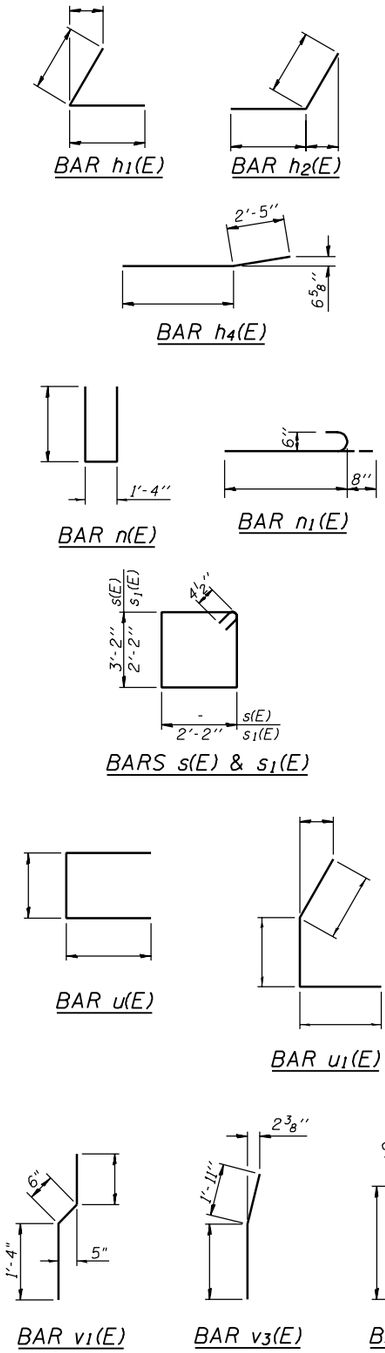

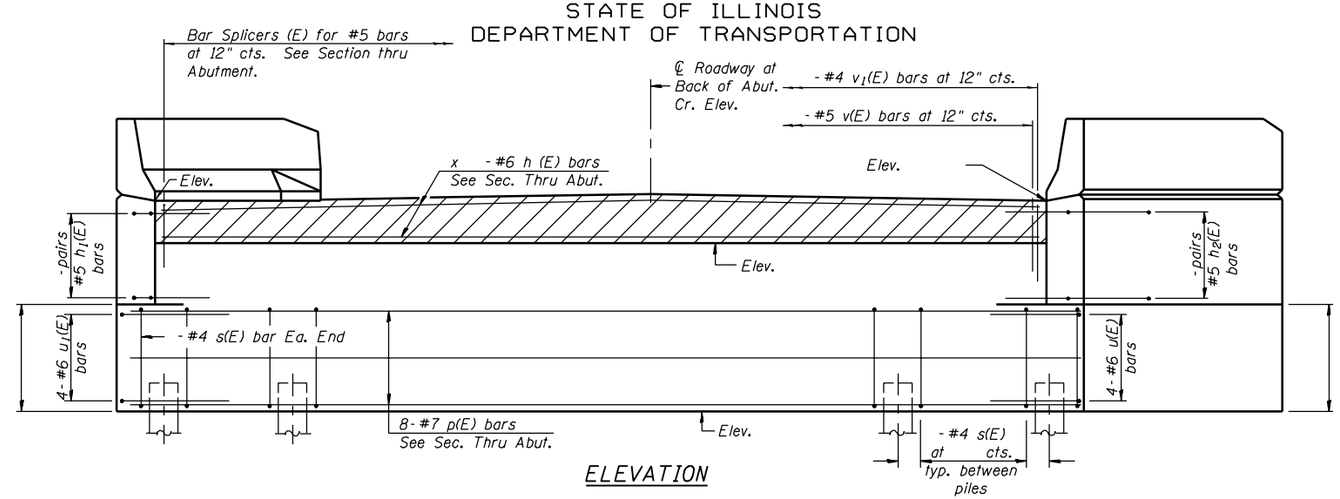

ELEVATION

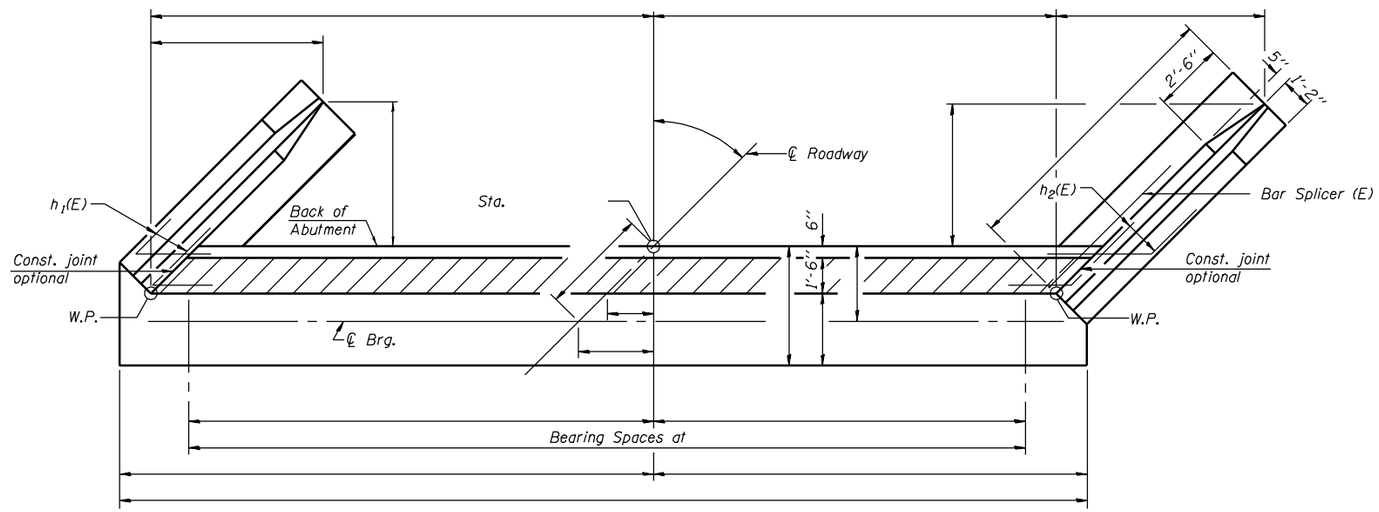

TOP VIEW

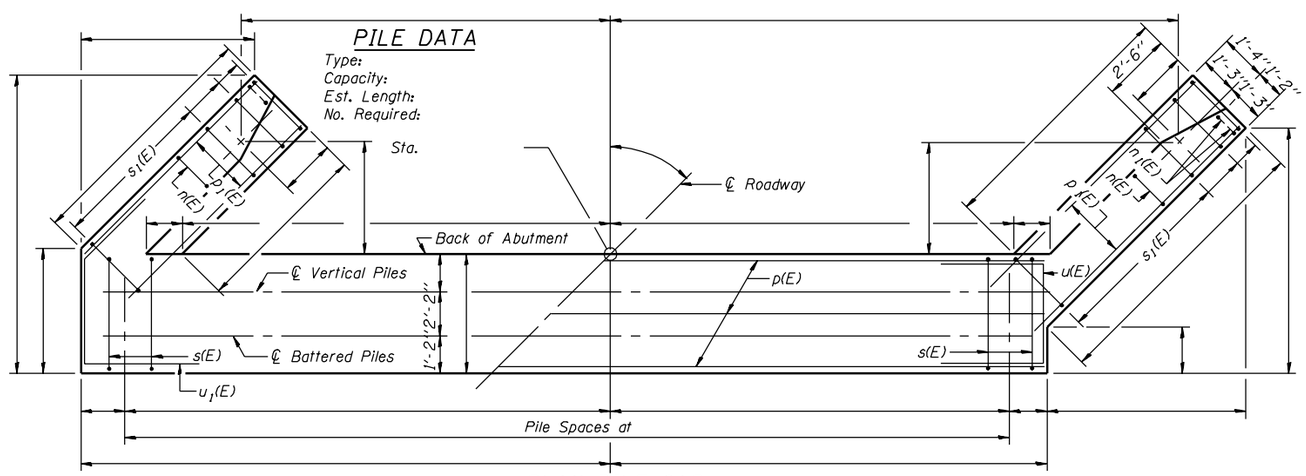

PLAN-PILE CAP

ABUTMENT BILL OF MATERIAL

Bar	No.	Size	Length	Shape
h(E)		#5		
h_1(E)		#5		
h_2(E)		#5		
h_3(E)		#4		
h_4(E)		#4		
n(E)		#6		
n_1(E)		#6		
p(E)		#7		
p_1(E)		#7		
s(E)		#4		
s_1(E)		#4		
u(E)		#6		
u_1(E)		#6		
v(E)		#5		
v_1(E)		#4		
v_2(E)		#6		
v_3(E)		#6		
v_4(E)		#6		
Structure Excavation		Cu. Yd.		
Concrete Structures		Cu. Yd.		
Reinforcement Bars, Epoxy Coated		Pound		
Piles		Foot		
Test Piles		Each		

Reinforcement bars designated (E) shall be epoxy coated.
For details of Bar Splicers, see sheet of .

DESIGNED -	
CHECKED -	
DRAWN -	
CHECKED -	

- 200
EXAMINED
ENGINEER OF BRIDGE DESIGN
PASSED
ENGINEER OF BRIDGES AND STRUCTURES

A-1-R (35°-60°) 10-22-04

The Illinois Coil-Lock Anchor Bolt is a proprietary item which is the property of the Illinois Department of Transportation. Use, reproduction or disclosure without express written permission is prohibited and protected under Federal copyright laws. The production and the fabrication of this bolt for use on highway projects in the State of Illinois shall be permitted and there shall be no incurred charges or fees to the manufacturer or the fabricator for producing or fabricating this bolt.

STATE OF ILLINOIS
DEPARTMENT OF TRANSPORTATION

ROUTE NO.	SECTION	COUNTY	TOTAL SHEETS	SHEET NO.
-				
-	-	-		
FED. ROAD DIST. NO. 7		ILLINOIS	FED. AID PROJECT-	

SHEET NO. -
- SHEETS

Contract #

D	E	H	K	"d"
1"	1 1/8"	13/16"	1 3/4"	1/4"
1 1/4"	1 3/8"	1 1/16"	2"	3/8"
1 1/2"	1 5/8"	1 5/16"	2 1/8"	1/2"
2"	2 1/8"	1 13/16"	2 7/8"	1/2"
2 1/2"	2 5/8"	2 5/16"	3 3/8"	1"

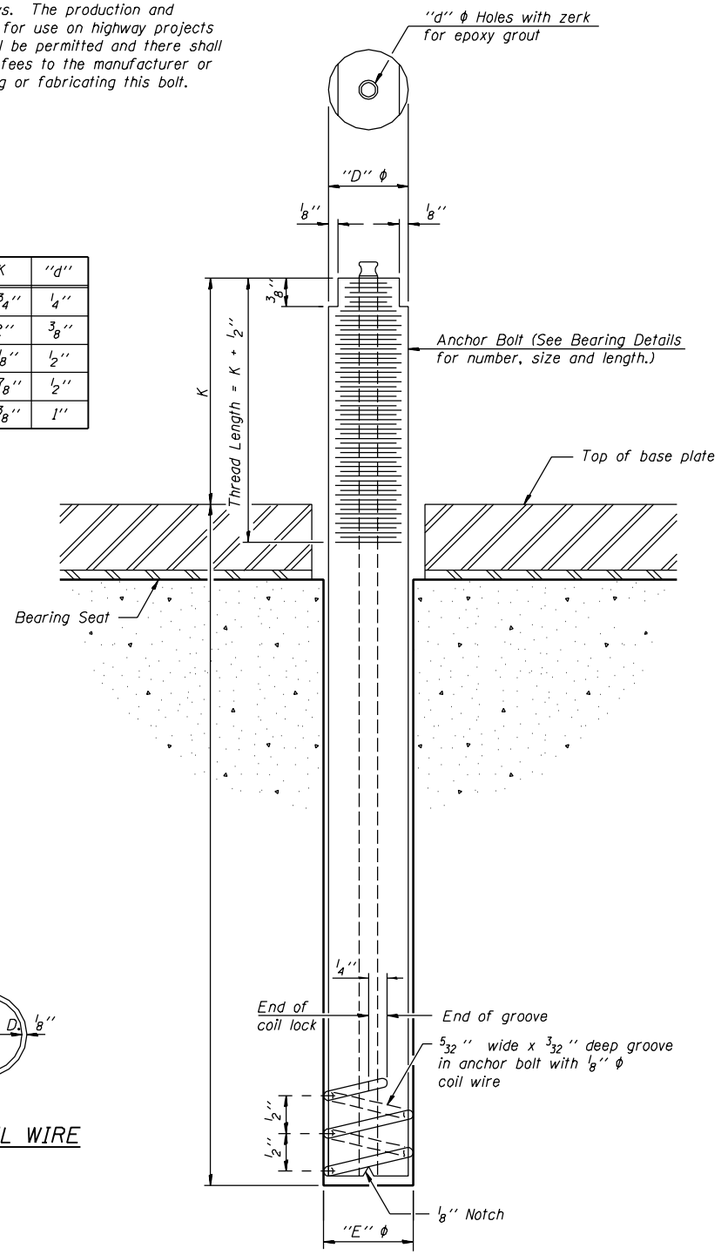

ILLINOIS COIL-LOCK ANCHOR BOLT

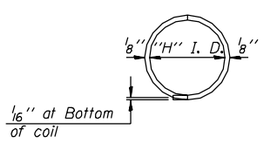

PLAN-COIL WIRE

MATERIALS FOR ILLINOIS COIL-LOCK ANCHOR BOLT

The anchor bolt shall be fabricated from cold drawn or hot finished seamless carbon steel mechanical tubing conforming to ASTM A 519, Grade 1026, CW and supplied with hexagonal nuts and cut washers.

The coil wire shall be made of any suitable soft steel wire.

The finished anchor bolt shall be cleaned of rust and other foreign materials and wrapped or packaged to prevent contamination until they are installed.

The epoxy grout shall be a two-component, epoxy resin bonding system conforming to ASTM C 881, Type I, Grade 1 and of a Class suitable for the temperature at installation.

INSTALLATION PROCEDURE for the ILLINOIS COIL-LOCK ANCHOR BOLT

1. With the coil wire in place, the bolt shall be inserted into the hole and turned clockwise to a snug fit in the hole. Nut and washer shall be placed on the bolt. The nut shall be tensioned until the steel base plates are held securely to the concrete bearing seat.
2. Epoxy grout shall be pumped through the zerk fitting with a pressure gun. Pumping shall continue until the epoxy overflows the hole around the bolt shank. After pumping is discontinued, excess epoxy shall be immediately wiped off.

ALTERNATE ANCHOR BOLTS

The Contractor may use, at his option, the capsule or the adhesive cartridge type anchor rods that have been previously tested and given a prior approval by the Department. The Contractor shall install these anchor rods in pre-drilled holes according to the manufacturer's recommendations and procedures.

The capsule or the adhesive cartridge type anchor rods shall be a two part system composed of:

1. A threaded rod stud with nut and washer of the type specified.
2. A sealed glass capsule or a sealed glass adhesive cartridge containing premeasured amounts of the adhesive chemical.

Location	Type

ASTM F 1554 Grade 105, ASTM A 449 and AASHTO M 314 Grade 105 anchor bolts may be substituted for the anchor bolts shown above.

GENERAL NOTES

Holes in the masonry for anchor bolts shall be drilled through the base plates to the diameter and depth shown or according to the manufacturer's recommendation after beams or girders have been erected and adjusted.

Prior to setting the bolts, the holes shall be dry and all dust and loose particles shall be removed by the use of compressed air or vacuuming.

The anchor bolts, furnished and installed and including the epoxy grout or capsules shall not be paid for separately but shall be included in the unit bid price for Furnishing and Erecting Structural Steel.

ANCHOR BOLT DETAILS FOR BEARINGS

DESIGNED -	
CHECKED -	
DRAWN -	
CHECKED -	

- 200
EXAMINED
ENGINEER OF BRIDGE DESIGN
PASSED
ENGINEER OF BRIDGES AND STRUCTURES

ABB-1 10-22-04

Notes: Pour steps monolithically with cap.
Reinforcement bars designated (E) shall be epoxy coated.

STATE OF ILLINOIS
DEPARTMENT OF TRANSPORTATION

ROUTE NO.	SECTION	COUNTY	TOTAL SHEETS	SHEET NO.
-	-	-		
FED. ROAD DIST. NO. 7		ILLINOIS	FED. AID PROJECT-	

SHEET NO. -
- SHEETS

Contract #

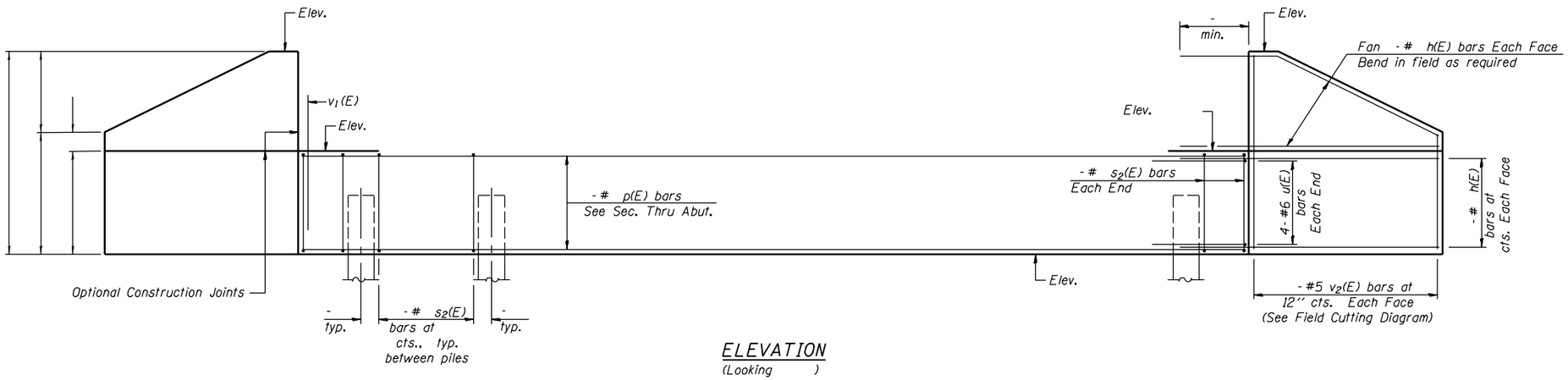

ELEVATION
(Looking)

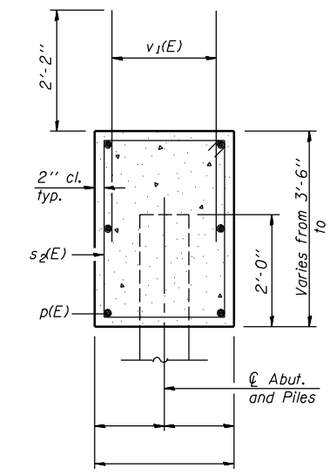

SEC. THRU ABUT.

PILE DATA

Type:
Capacity:
Est. Length:
No. Required:

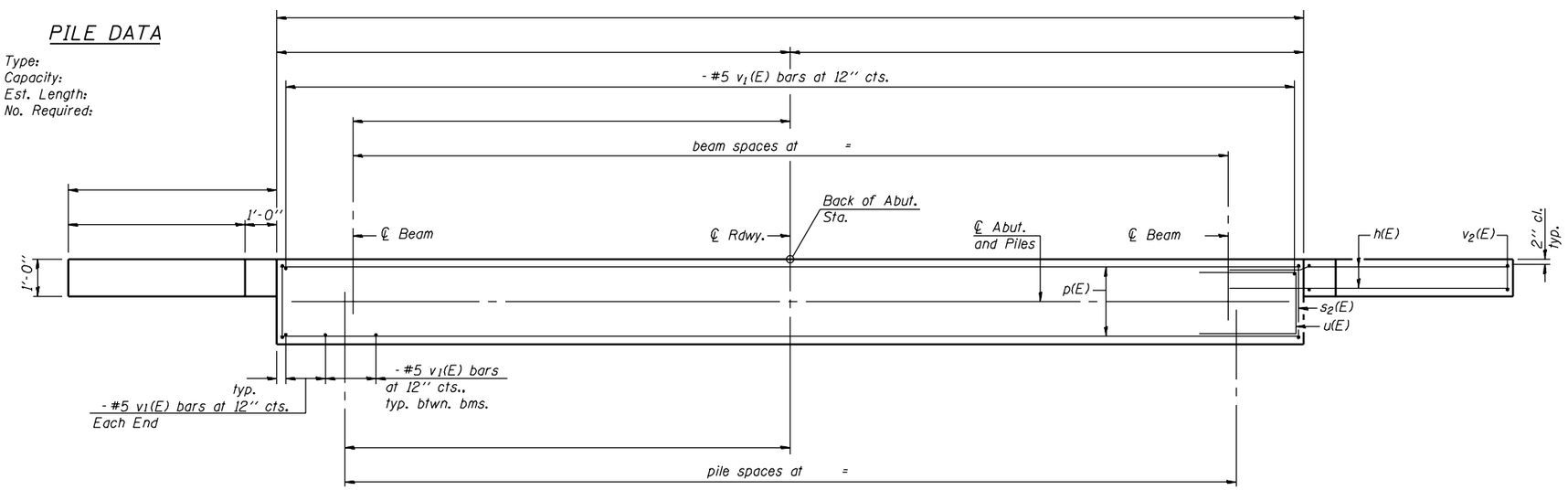

PLAN

BILL OF MATERIAL

Bar	No.	Size	Length	Shape
h(E)		#		
p(E)		#		
$s_2(E)$		#		
u(E)		#6		
$v_1(E)$		#5	4'-4''	
$v_2(E)$		#5		
Concrete Structures			Cu. Yd.	
Reinforcement Bars, Epoxy Coated			Pound	
Structure Excavation			Cu. Yd.	

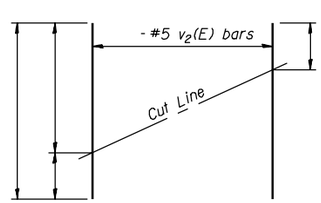

FIELD CUTTING DIAGRAM
Order $v_2(E)$ full length. Cut as shown and use remainder of bars in opposite face.

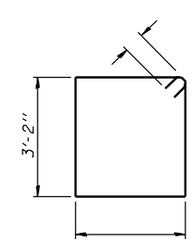

BAR $s_2(E)$

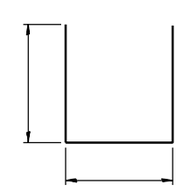

BAR u(E)

DESIGNED -	
CHECKED -	
DRAWN -	
CHECKED -	

- 200
EXAMINED
ENGINEER OF BRIDGE DESIGN
PASSED
ENGINEER OF BRIDGES AND STRUCTURES

AI-0 10-22-04

Notes: Pour steps monolithically with cap. Reinforcement bars designated (E) shall be epoxy coated.

STATE OF ILLINOIS
DEPARTMENT OF TRANSPORTATION

ROUTE NO.	SECTION	COUNTY	TOTAL SHEETS	SHEET NO.
-				
-	-	-		
FED. ROAD DIST. NO. 7		ILLINOIS	FED. AID PROJECT-	

SHEET NO. -
- SHEETS

Contract #

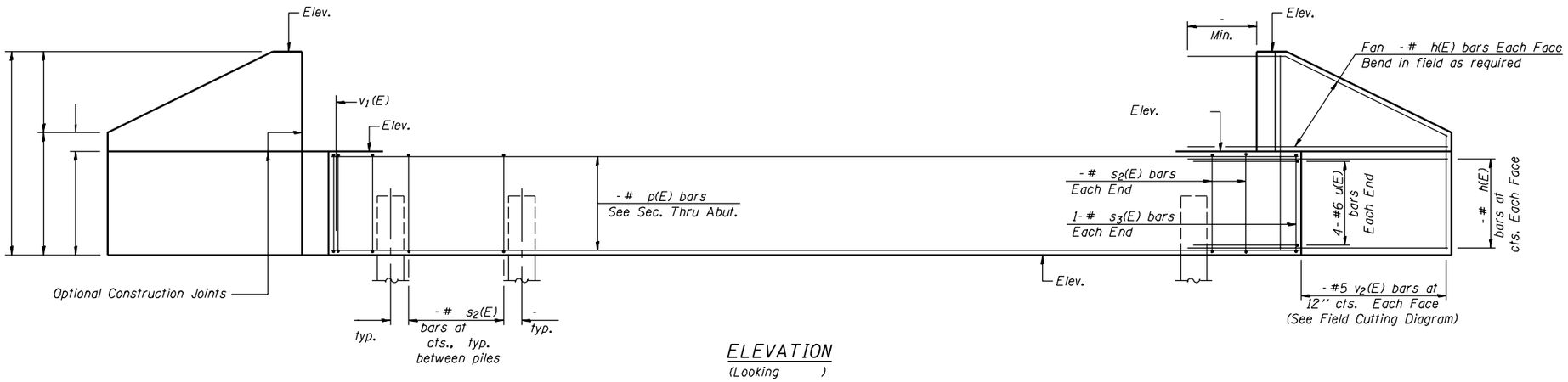

ELEVATION
(Looking)

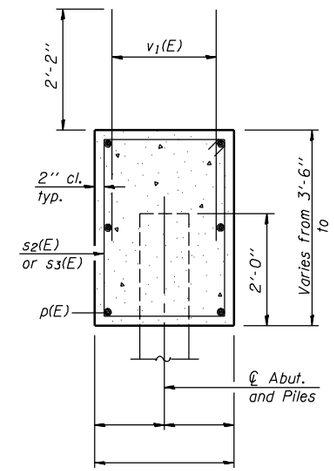

SEC. THRU ABUT.

PILE DATA

Type:
Capacity:
Est. Length:
No. Required:

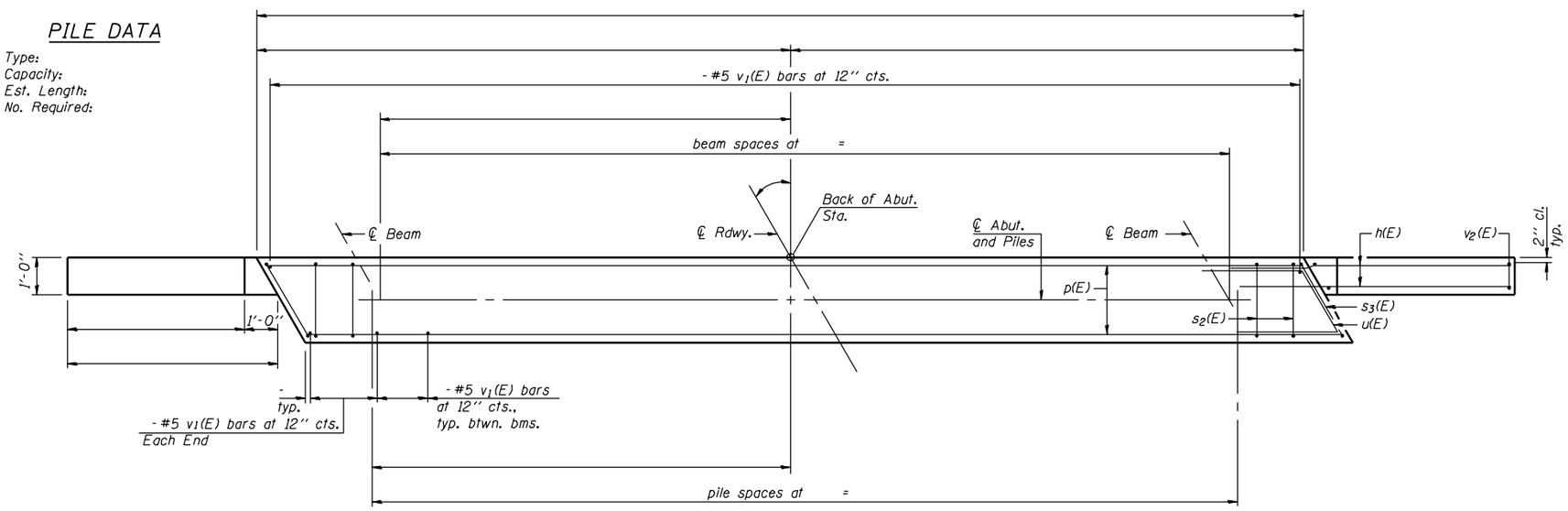

PLAN

BILL OF MATERIAL

Bar	No.	Size	Length	Shape
h(E)		#		
p(E)		#		
$s_2(E)$		#		
$s_3(E)$		#		
u(E)		#6		
$v_1(E)$		#5	4'-4''	
$v_2(E)$		#5		
Concrete Structures			Cu. Yd.	
Reinforcement Bars, Epoxy Coated			Pound	
Structure Excavation			Cu. Yd.	

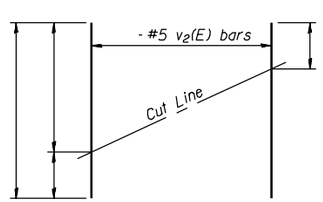

FIELD CUTTING DIAGRAM
Order $v_2(E)$ full length. Cut as shown and use remainder of bars in opposite face.

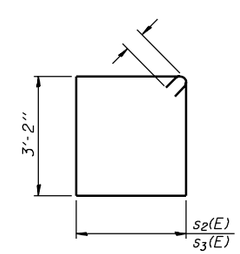

BARS $s_2(E)$ & $s_3(E)$

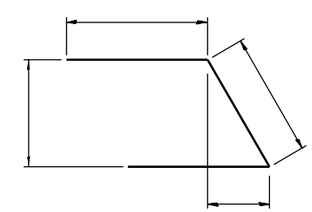

BAR u(E)

DESIGNED -	
CHECKED -	
DRAWN -	
CHECKED -	

- 200
EXAMINED
ENGINEER OF BRIDGE DESIGN
PASSED
ENGINEER OF BRIDGES AND STRUCTURES

AI-L 10-22-04

Notes: Pour steps monolithically with cap. Reinforcement bars designated (E) shall be epoxy coated.

STATE OF ILLINOIS
DEPARTMENT OF TRANSPORTATION

ROUTE NO.	SECTION	COUNTY	TOTAL SHEETS	SHEET NO.
-	-	-		
FED. ROAD DIST. NO. 7		ILLINOIS	FED. AID PROJECT-	

SHEET NO. -
- SHEETS

Contract #

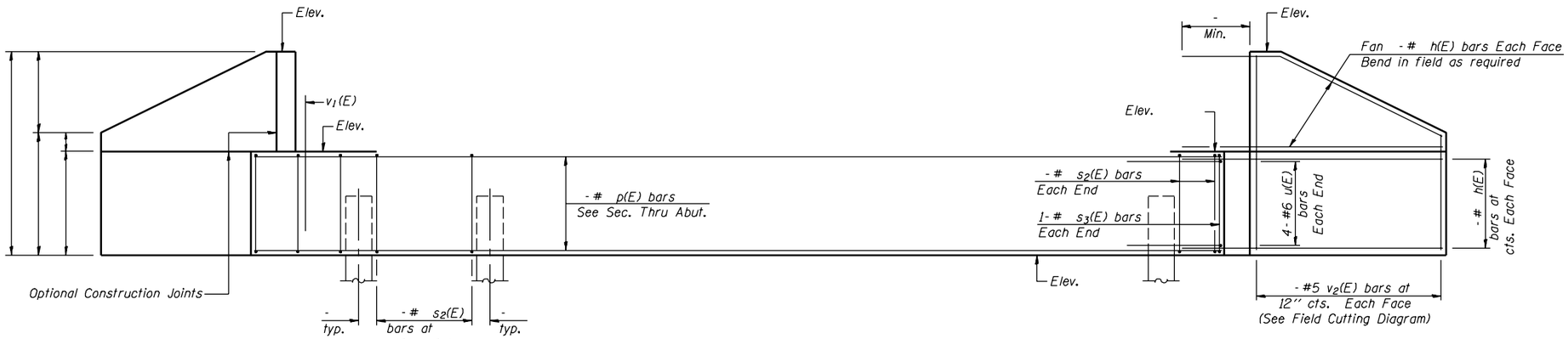

ELEVATION
(Looking)

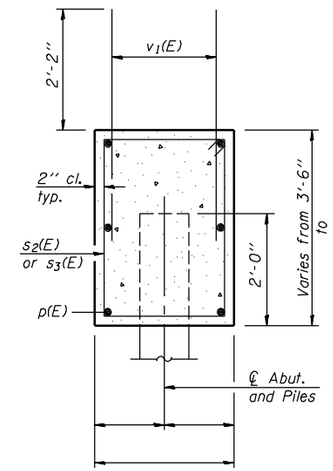

SEC. THRU ABUT.

PILE DATA

Type:
Capacity:
Est. Length:
No. Required:

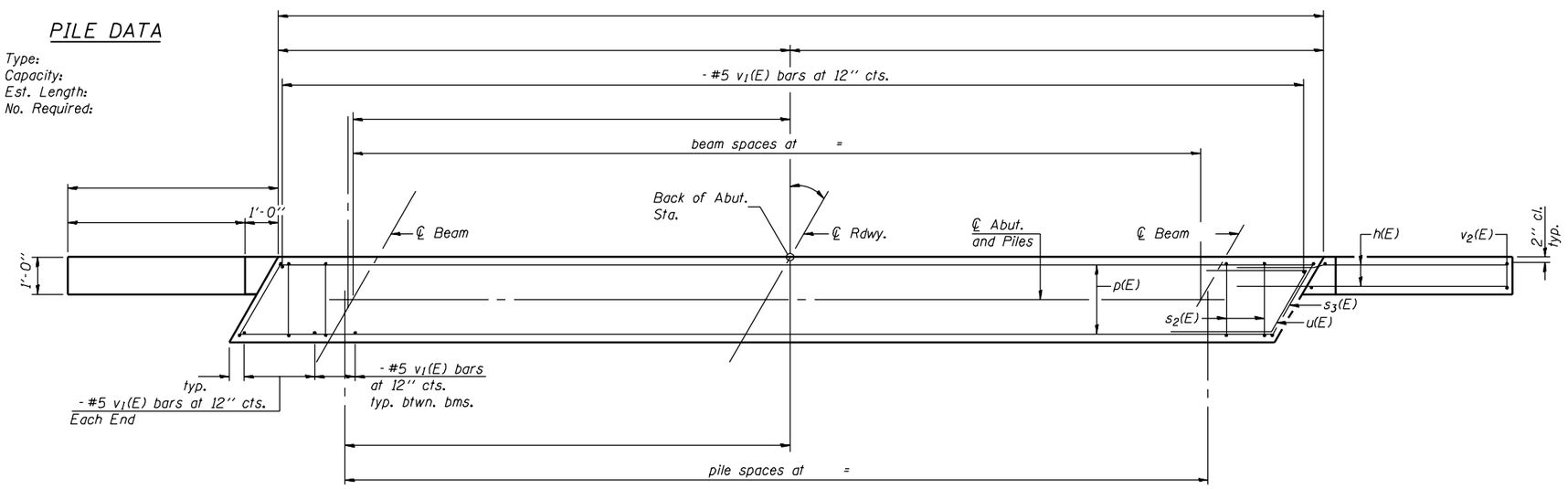

PLAN

BILL OF MATERIAL

Bar	No.	Size	Length	Shape
h(E)		#		
p(E)		#		
$s_2(E)$		#		
$s_3(E)$		#		
u(E)		#6		
$v_1(E)$		#5	4'-4''	
$v_2(E)$		#5		
Concrete Structures			Cu. Yd.	
Reinforcement Bars, Epoxy Coated			Pound	
Structure Excavation			Cu. Yd.	

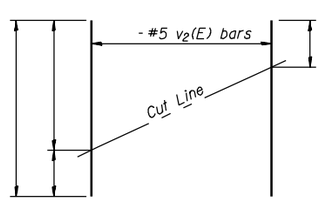

FIELD CUTTING DIAGRAM

Order $v_2(E)$ full length. Cut as shown and use remainder of bars in opposite face.

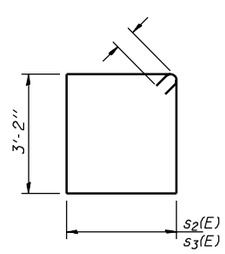

BARS $s_2(E)$ & $s_3(E)$

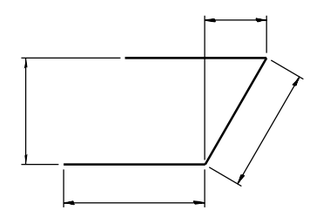

BAR u(E)

DESIGNED -	
CHECKED -	
DRAWN -	
CHECKED -	

- 200
EXAMINED
ENGINEER OF BRIDGE DESIGN
PASSED
ENGINEER OF BRIDGES AND STRUCTURES

AI-R 10-22-04

Notes:
Space reinforcement in cap to miss anchor bolts.
Reinforcement bars designated (E) shall be epoxy coated.
Pour steps monolithically with cap.

STATE OF ILLINOIS
DEPARTMENT OF TRANSPORTATION

ROUTE NO.	SECTION	COUNTY	TOTAL SHEETS	SHEET NO.
-	-	-		
FED. ROAD DIST. NO. 7		ILLINOIS	FED. AID PROJECT-	

SHEET NO. -
- SHEETS

Contract #

APPR. BENT-PILE DATA

Type
Capacity
Est. Length
No. Req'd.

ABUT.-PILE DATA

Type
Capacity
Est. Length
No. Req'd.

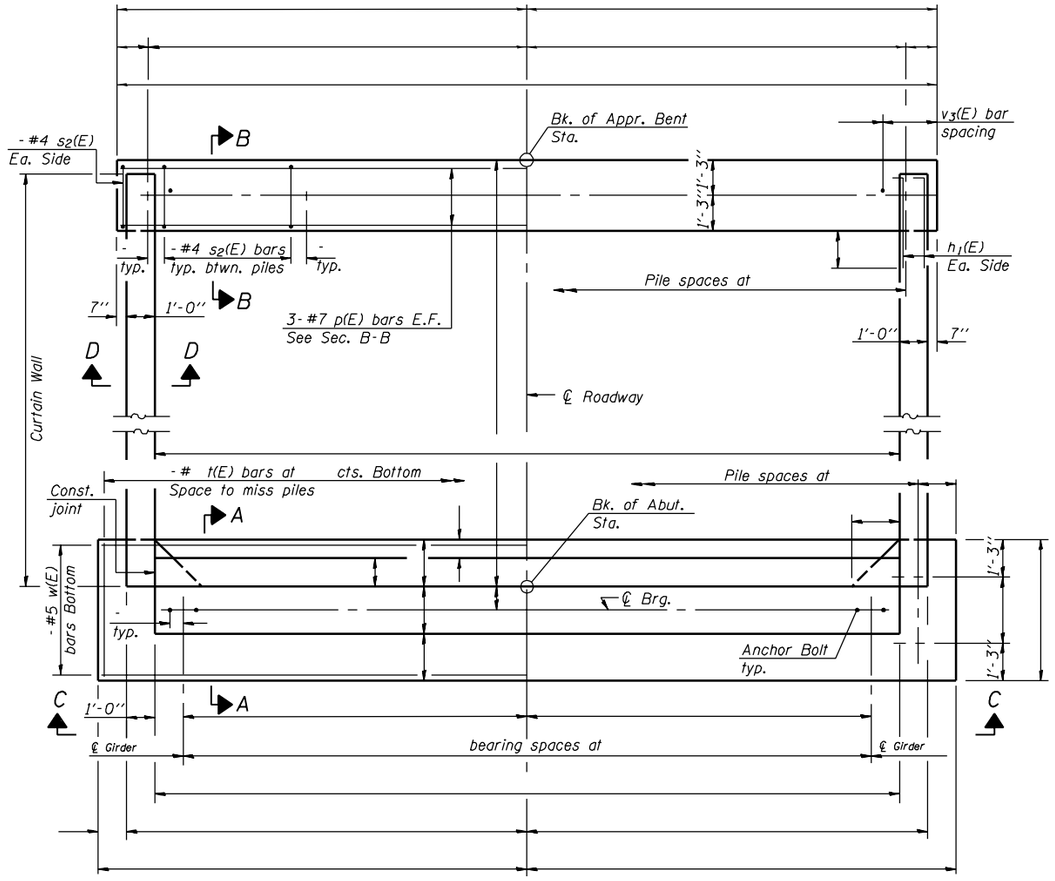

PLAN

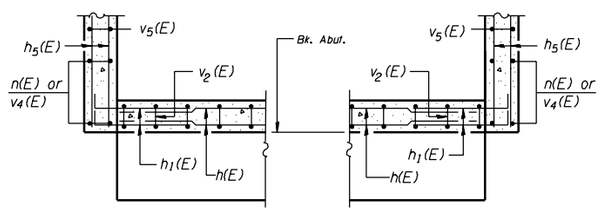

SECTION E-E

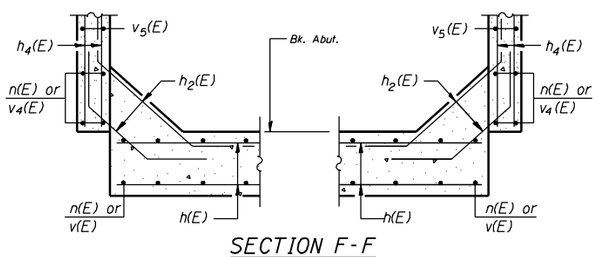

SECTION F-F

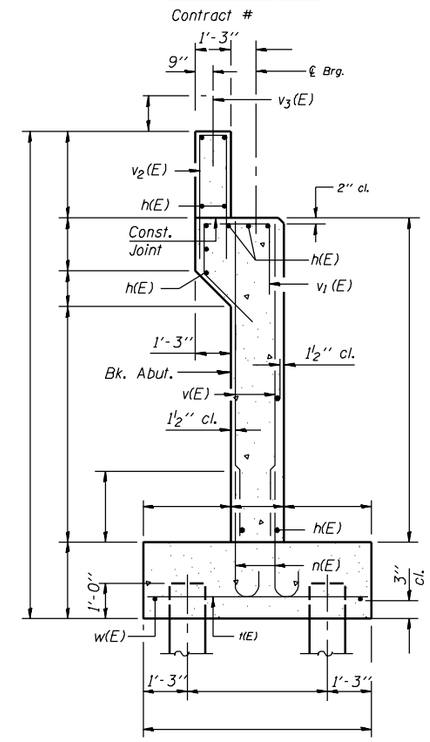

SECTION A-A

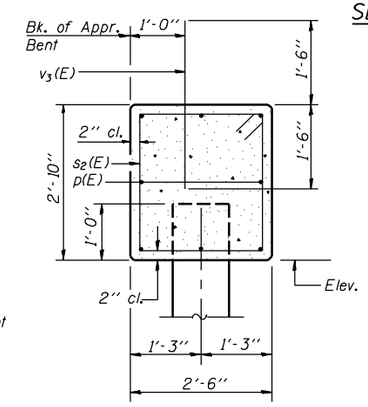

SECTION B-B

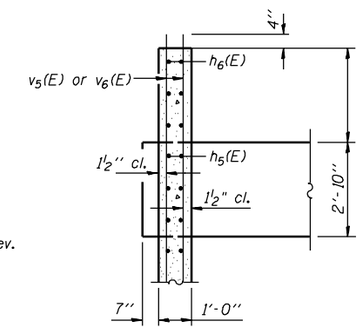

SECTION D-D

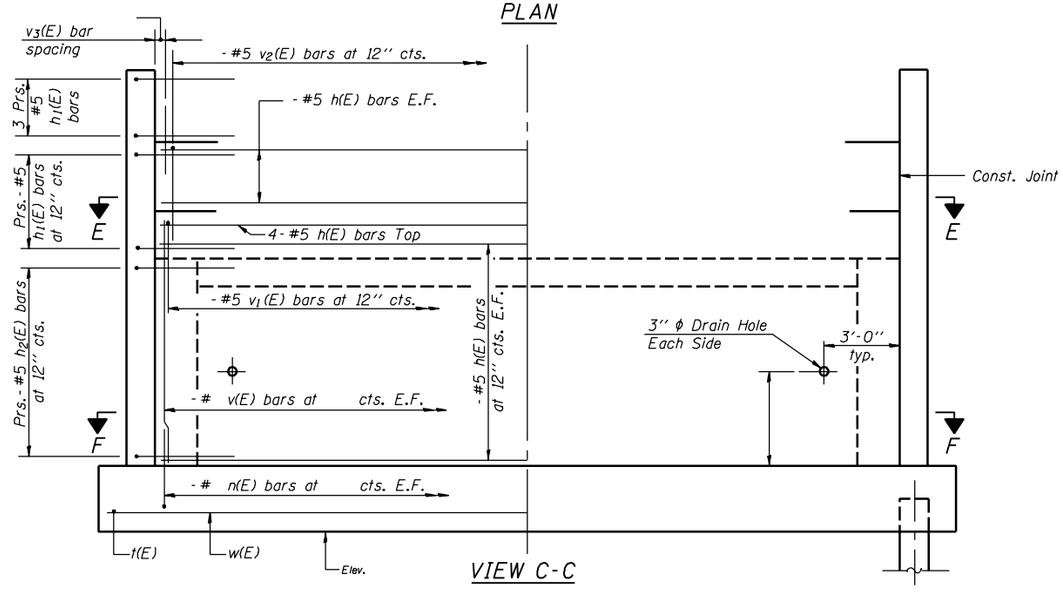

VIEW C-C

DESIGNED -	
CHECKED -	
DRAWN -	
CHECKED -	

- 200
EXAMINED
ENGINEER OF BRIDGE DESIGN
PASSED
ENGINEER OF BRIDGES AND STRUCTURES

AV-I-0 10-22-04

Notes:
Space reinforcement in cap to miss anchor bolts.
Reinforcement bars designated (E) shall be epoxy coated.
Pour steps monolithically with cap.

STATE OF ILLINOIS
DEPARTMENT OF TRANSPORTATION

ROUTE NO.	SECTION	COUNTY	TOTAL SHEETS	SHEET NO.
-				
-	-	-		
FED. ROAD DIST. NO. 7		ILLINOIS	FED. AID PROJECT-	

SHEET NO. -
- SHEETS

Contract #

APPR. BENT-PILE DATA

Type
Capacity
Est. Length
No. Req'd.

ABUT.-PILE DATA

Type
Capacity
Est. Length
No. Req'd.

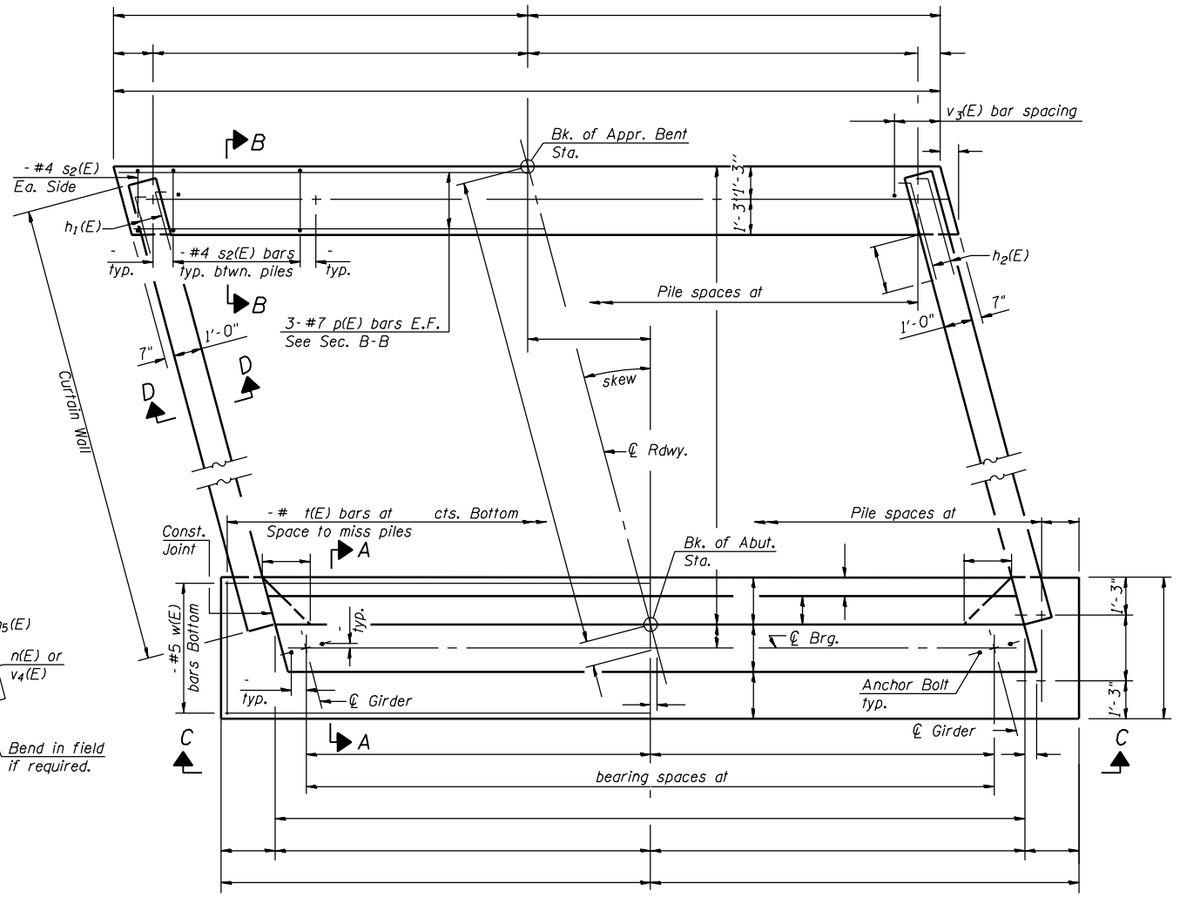

PLAN

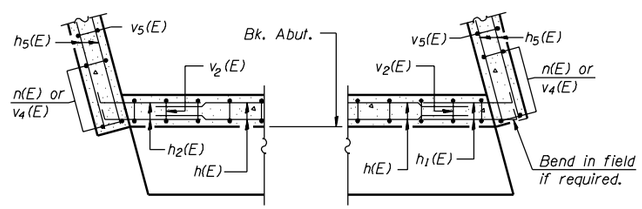

SECTION E-E

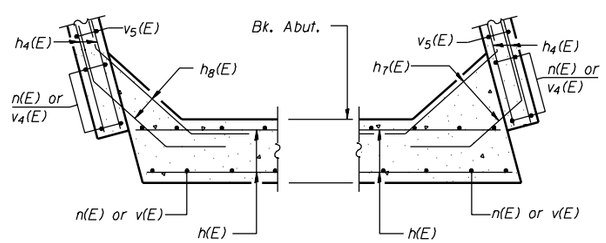

SECTION F-F

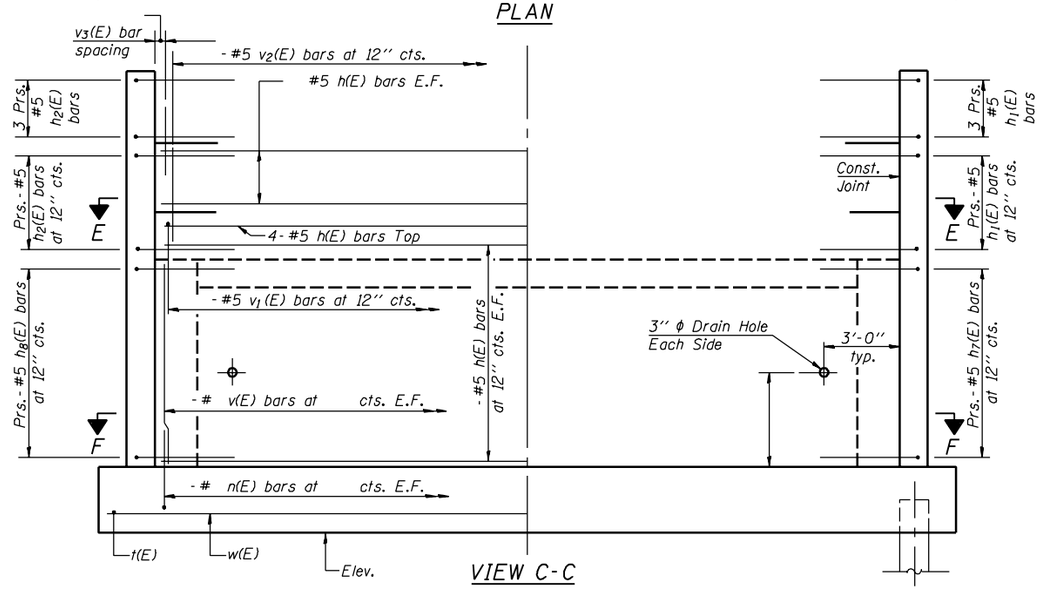

VIEW C-C

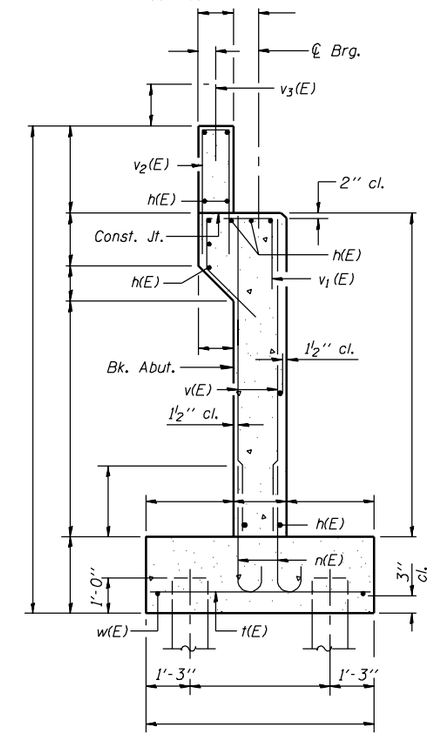

SECTION A-A

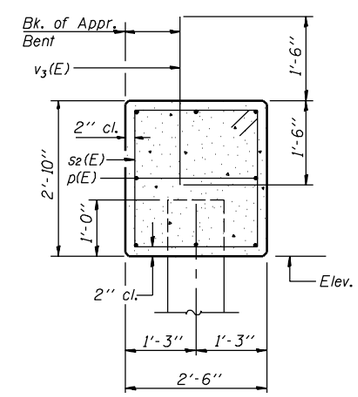

SECTION B-B

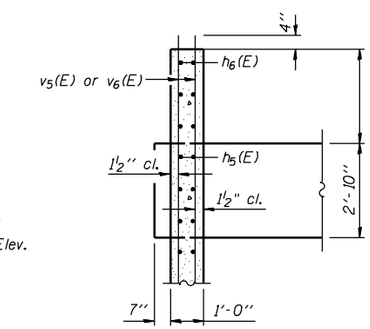

SECTION D-D

DESIGNED -	
CHECKED -	
DRAWN -	
CHECKED -	

- 200

EXAMINED

ENGINEER OF BRIDGE DESIGN

PASSED

ENGINEER OF BRIDGES AND STRUCTURES

AV-I-L 10-22-04

Notes:
Space reinforcement in cap to miss anchor bolts.
Reinforcement bars designated (E) shall be epoxy coated.
Pour steps monolithically with cap.

STATE OF ILLINOIS
DEPARTMENT OF TRANSPORTATION

ROUTE NO.	SECTION	COUNTY	TOTAL SHEETS	SHEET NO.
-				
-	-	-		
FED. ROAD DIST. NO. 7		ILLINOIS	FED. AID PROJECT-	

SHEET NO. -
- SHEETS

Contract #

APPR. BENT-PILE DATA

Type
Capacity
Est. Length
No. Req'd.

ABUT.-PILE DATA

Type
Capacity
Est. Length
No. Req'd.

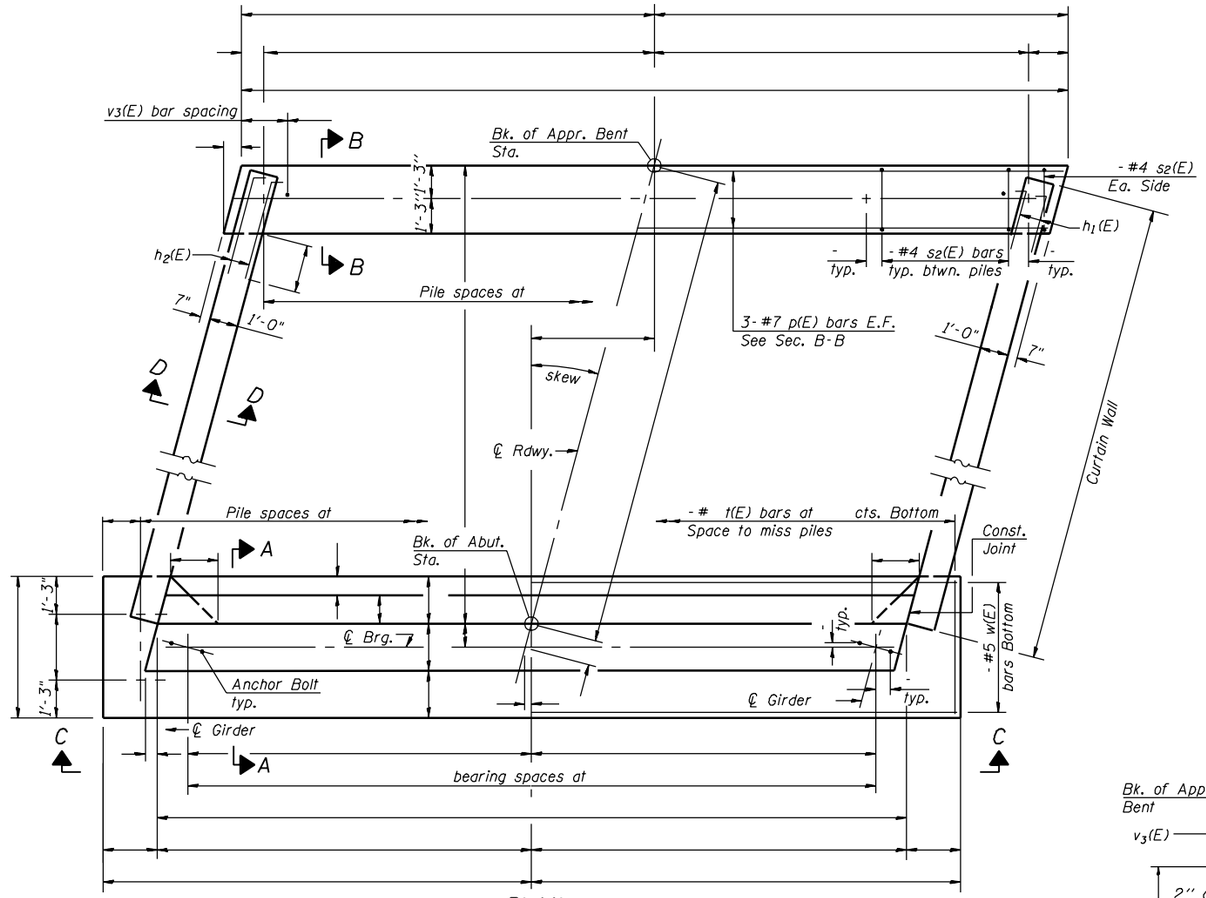

PLAN

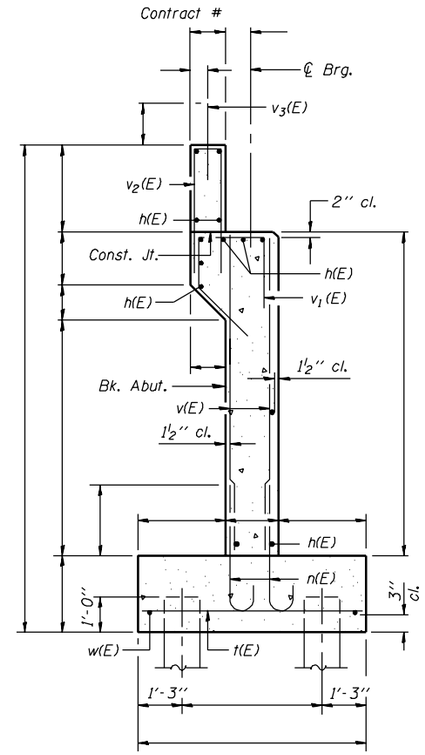

SECTION A-A

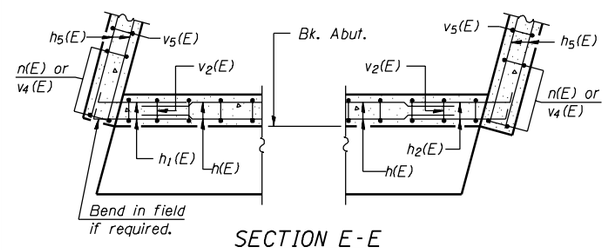

SECTION E-E

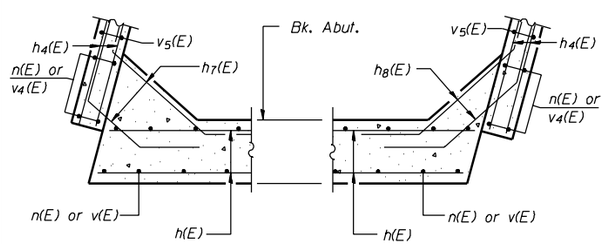

SECTION F-F

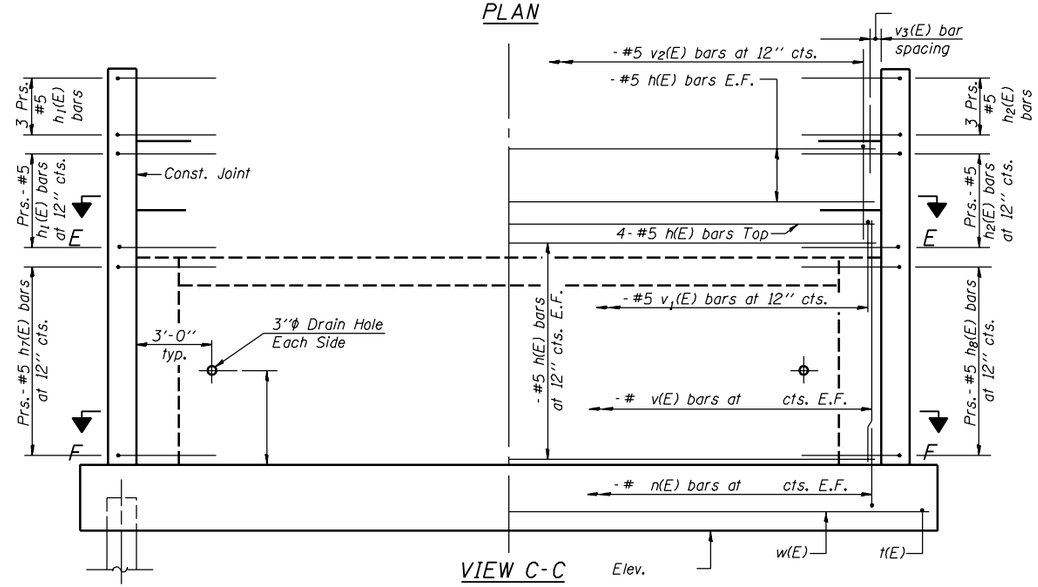

VIEW C-C

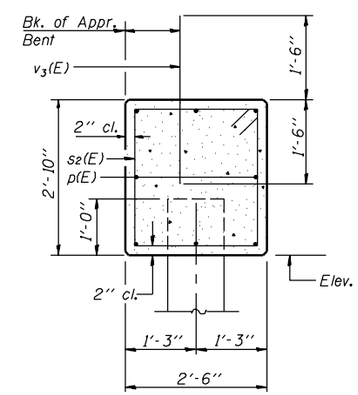

SECTION B-B

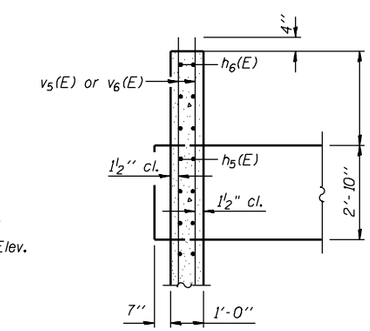

SECTION D-D

DESIGNED -	
CHECKED -	
DRAWN -	
CHECKED -	

- 200

EXAMINED
ENGINEER OF BRIDGE DESIGN

PASSED
ENGINEER OF BRIDGES AND STRUCTURES

AV-I-R 10-22-04

STATE OF ILLINOIS
DEPARTMENT OF TRANSPORTATION

ROUTE NO.	SECTION	COUNTY	TOTAL SHEETS	SHEET NO.
-	-	-		
FED. ROAD DIST. NO. 7		ILLINOIS	FED. AID PROJECT-	

SHEET NO. -
- SHEETS

Contract #

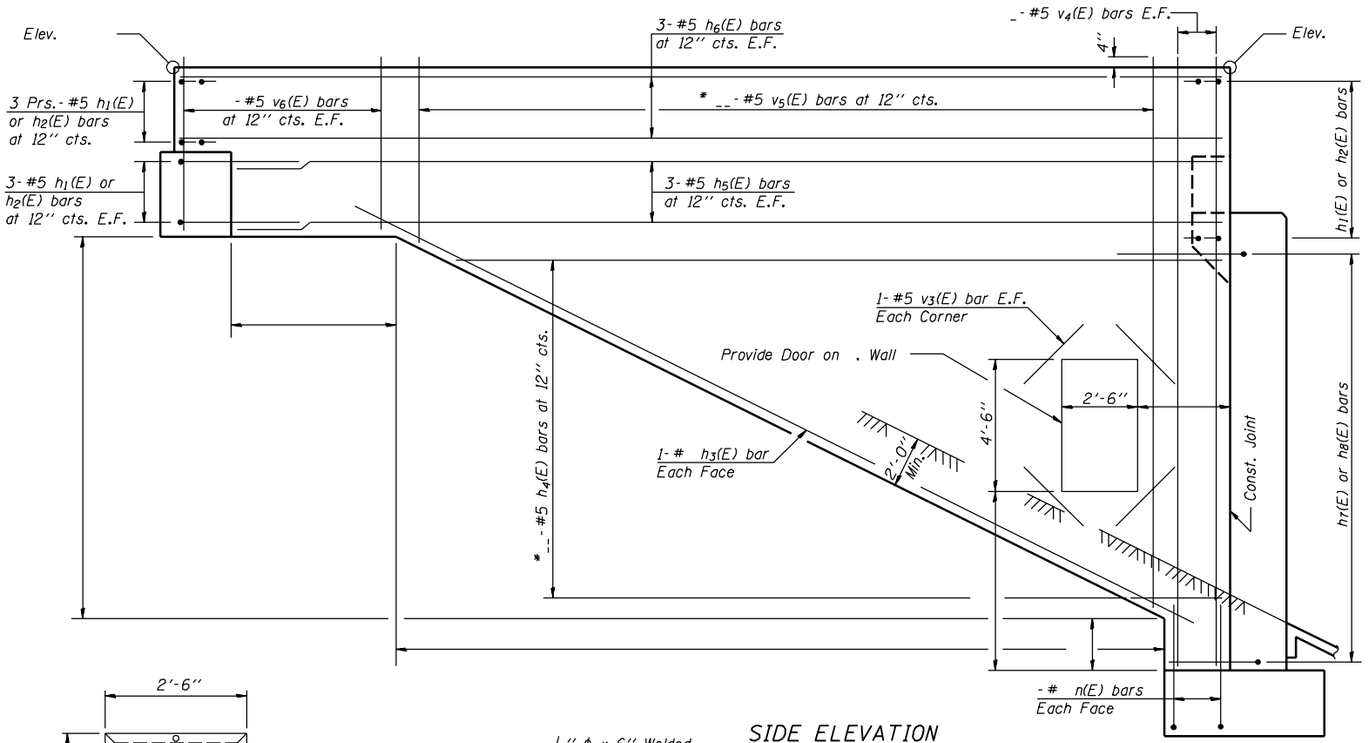

SIDE ELEVATION

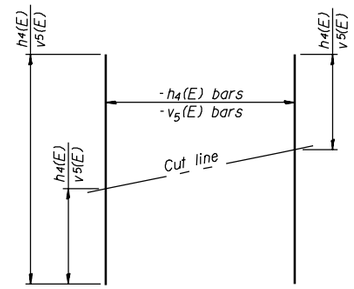

FIELD CUTTING DIAGRAM

* Order $h_4(E)$ and $v_5(E)$ bars full length. Cut to fit and use the remainder of bars in opposite face.

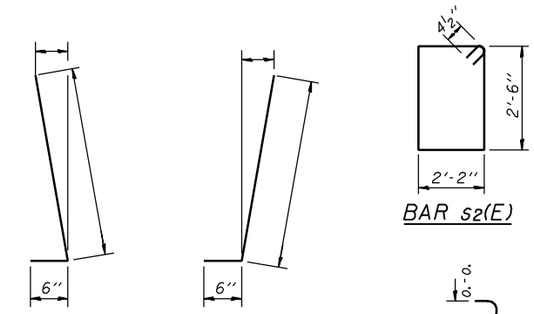

BAR $h_1(E)$ BAR $h_2(E)$ BAR $s_2(E)$

BAR $n(E)$

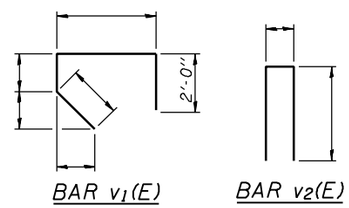

BAR $v_1(E)$ BAR $v_2(E)$

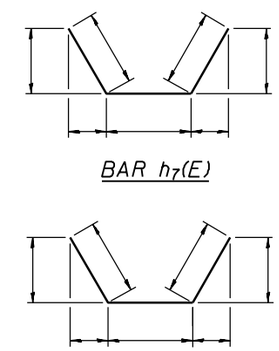

BAR $h_7(E)$

BAR $h_8(E)$

BILL OF MATERIAL

Bar	No.	Size	Length	Shape
h(E)		#5		
$h_1(E)$		#5		
$h_2(E)$		#5		
$h_3(E)$				
$h_4(E)$		#5		
$h_5(E)$		#5		
$h_6(E)$		#5		
$h_7(E)$		#5		
$h_8(E)$		#5		
n(E)				
p(E)		#7		
$s_2(E)$		#4	10'-1"	
t(E)				
v(E)				
$v_1(E)$		#5		
$v_2(E)$		#5		
$v_3(E)$		#5	3'-0"	
$v_4(E)$		#5		
$v_5(E)$		#5		
$v_6(E)$		#5		
w(E)		#5		
Concrete Structures			Cu. Yd.	
Reinforcement Bars, Epoxy Coated			Pound	
Structure Excavation			Cu. Yd.	
Piles			Foot	
Test Piles			Each	

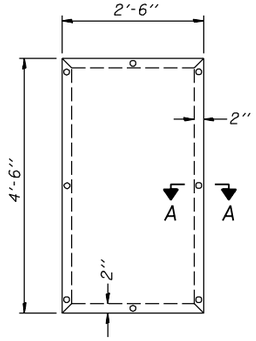

DOOR ELEVATION

Cost of door and frame are included with Concrete Structures.

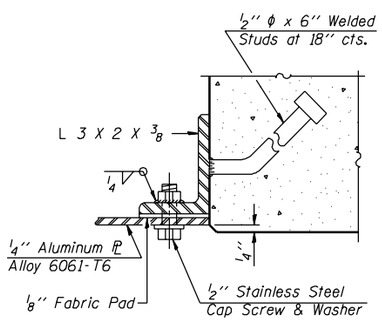

SECTION A-A

Notes:
Reinforcement bars designated (E) shall be epoxy coated.
Pour steps monolithically with cap.

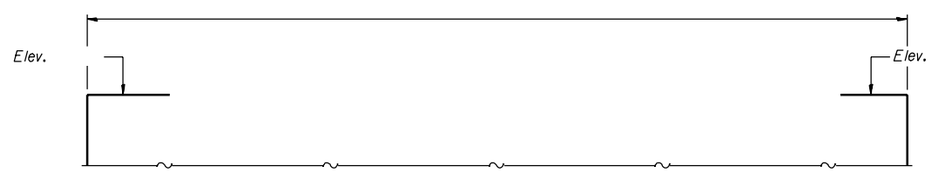

APPROACH BENT STEP DETAIL
(Looking)

DESIGNED -	
CHECKED -	
DRAWN -	
CHECKED -	

- 200
EXAMINED
ENGINEER OF BRIDGE DESIGN
PASSED
ENGINEER OF BRIDGES AND STRUCTURES

AV-IW-LR 10-22-04

STATE OF ILLINOIS
DEPARTMENT OF TRANSPORTATION

ROUTE NO.	SECTION	COUNTY	TOTAL SHEETS	SHEET NO.
-				
-	-	-		
FED. ROAD DIST. NO. 7		ILLINOIS	FED. AID PROJECT-	

SHEET NO. -
- SHEETS

Contract #

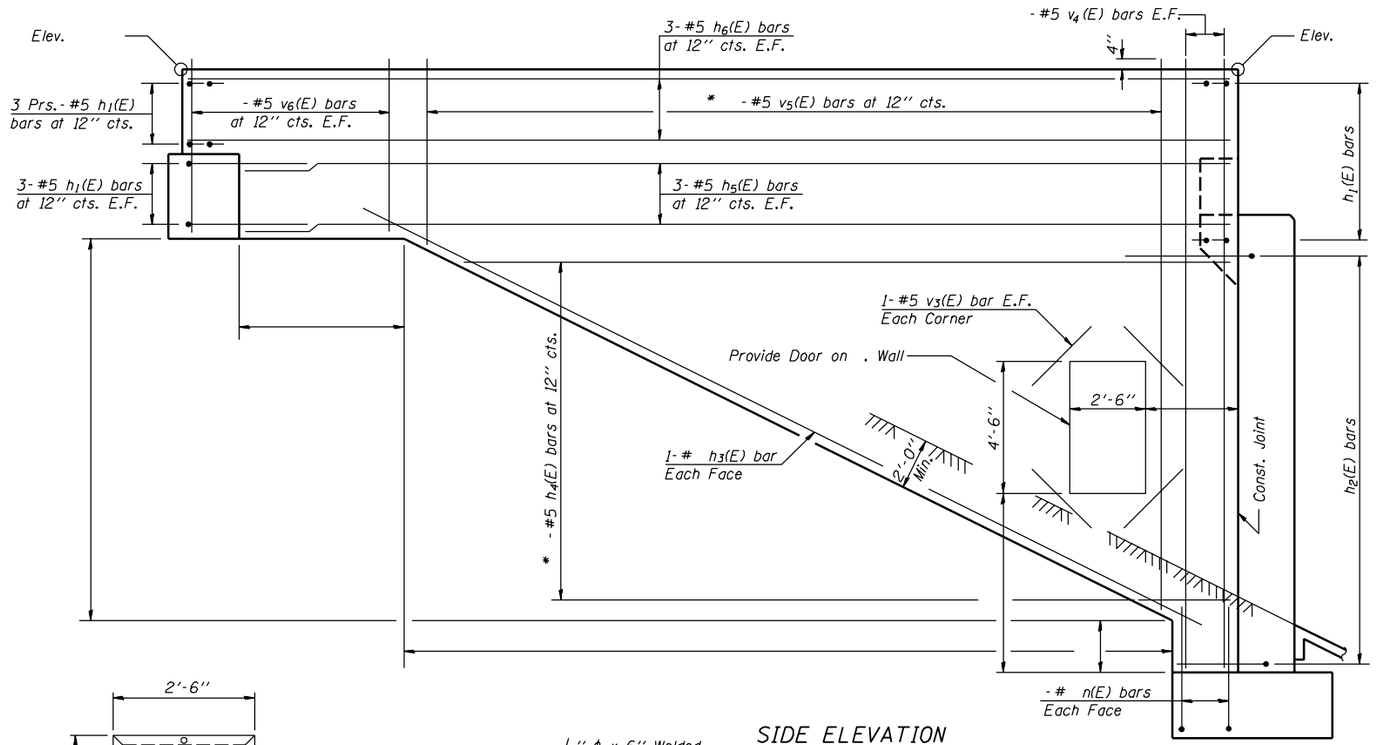

SIDE ELEVATION

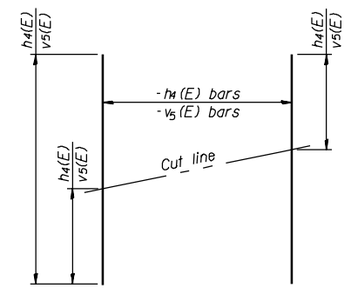

FIELD CUTTING DIAGRAM

* Order h_4(E) and v_5(E) bars full length. Cut to fit and use the remainder of bars in opposite face.

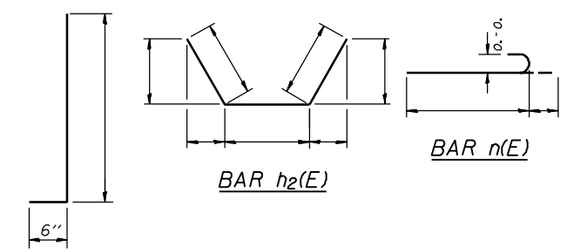

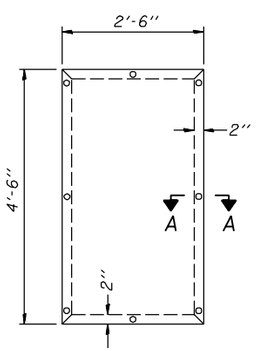

DOOR ELEVATION

Cost of door and frame are included with Concrete Structures.

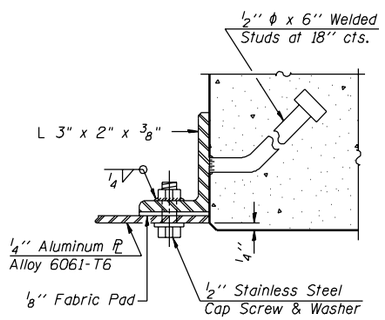

SECTION A-A

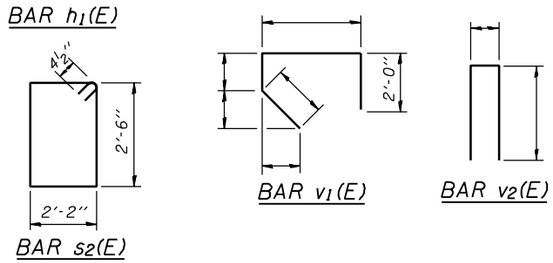

BILL OF MATERIAL

Bar	No.	Size	Length	Shape
h(E)		#5		
h_1(E)		#5		
h_2(E)		#5		
h_3(E)				
h_4(E)		#5		
h_5(E)		#5		
h_6(E)		#5		
n(E)				
p(E)		#7		
s_2(E)		#4	10'-1''	
t(E)				
v(E)				
v_1(E)		#5		
v_2(E)		#5		
v_3(E)		#5	3'-0''	
v_4(E)		#5		
v_5(E)		#5		
v_6(E)		#5		
w(E)		#5		
Concrete Structures			Cu. Yd.	
Reinforcement Bars, Epoxy Coated			Pound	
Structure Excavation			Cu. Yd.	
Piles			Foot	
Test Piles			Each	

Notes:
Reinforcement bars designated (E) shall be epoxy coated.
Pour steps monolithically with cap.

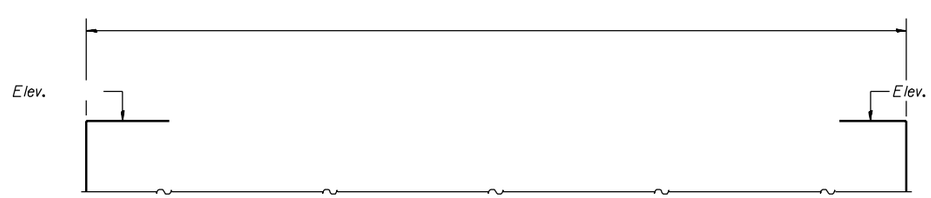

APPROACH BENT STEP DETAIL
(Looking)

DESIGNED -	
CHECKED -	
DRAWN -	
CHECKED -	

- 200

EXAMINED
ENGINEER OF BRIDGE DESIGN

PASSED
ENGINEER OF BRIDGES AND STRUCTURES

AV-IW-0 10-22-04

STATE OF ILLINOIS
DEPARTMENT OF TRANSPORTATION

ROUTE NO.	SECTION	COUNTY	TOTAL SHEETS	SHEET NO.
-				
-	-	-		
FED. ROAD DIST. NO. 7		ILLINOIS	FED. AID PROJECT-	

SHEET NO. -
- SHEETS

Contract #

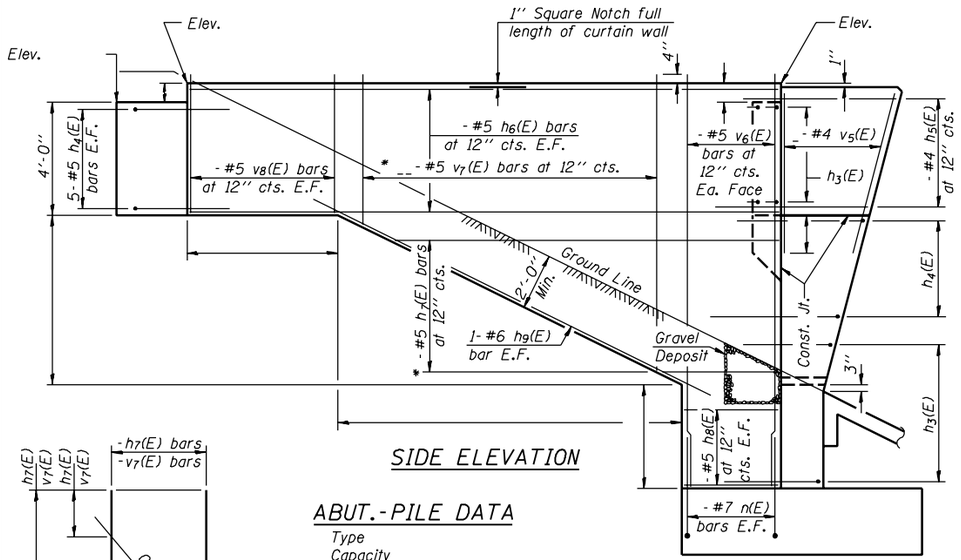

SIDE ELEVATION

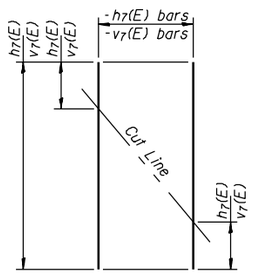

FIELD CUTTING DIAGRAM

* Order $h_7(E)$ & $v_7(E)$ bars full length. Cut to fit as shown and use remainder of bars in other face.

ABUT.-PILE DATA

Type
Capacity
Est. Length
No. Req'd.

APPR. BENT-PILE DATA

Type
Capacity
Est. Length
No. Req'd.

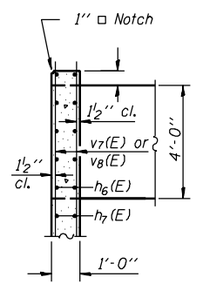

SECTION C-C

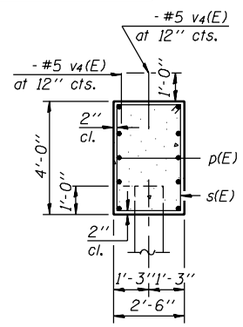

SECTION B-B

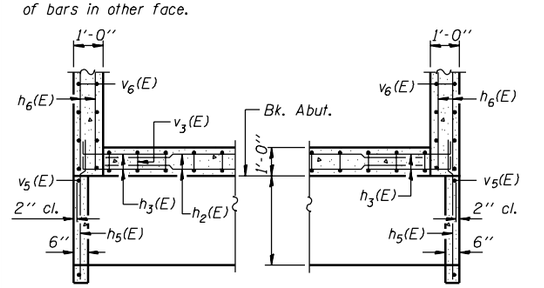

SECTION E-E

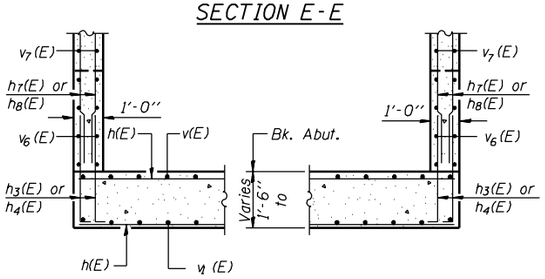

SECTION F-F

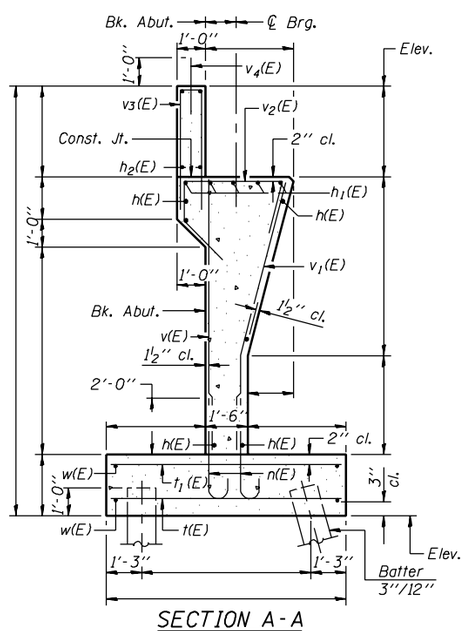

SECTION A-A

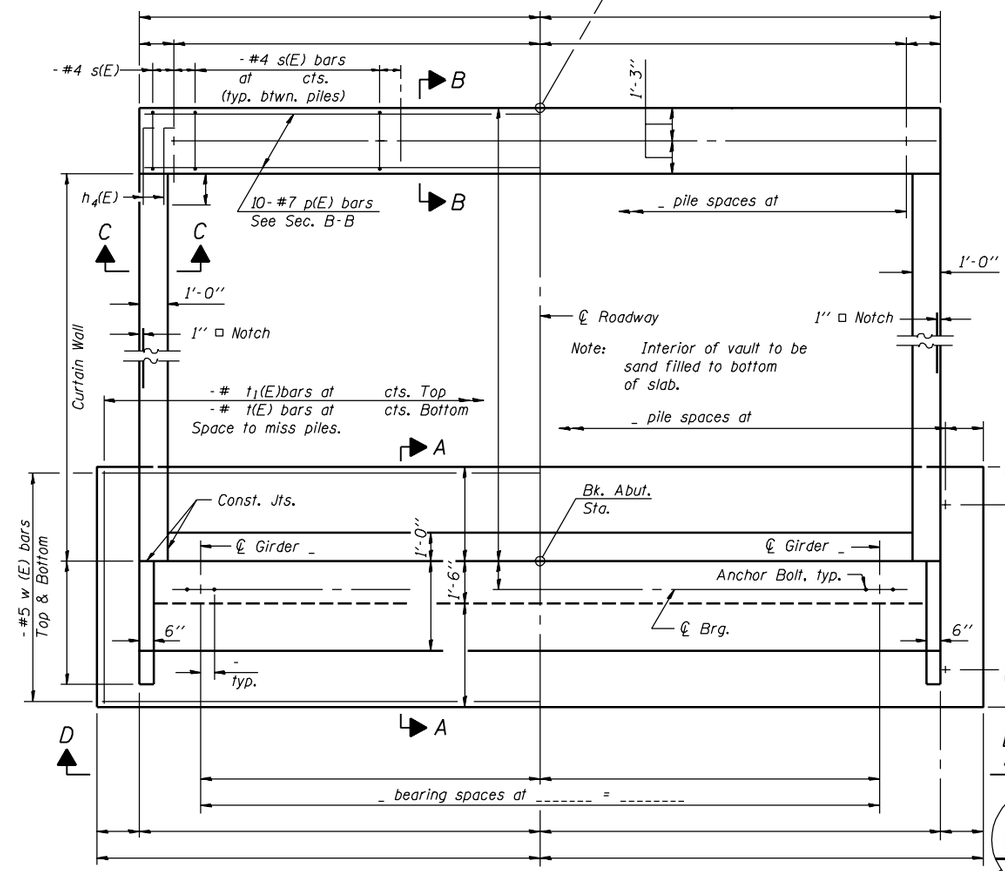

PLAN

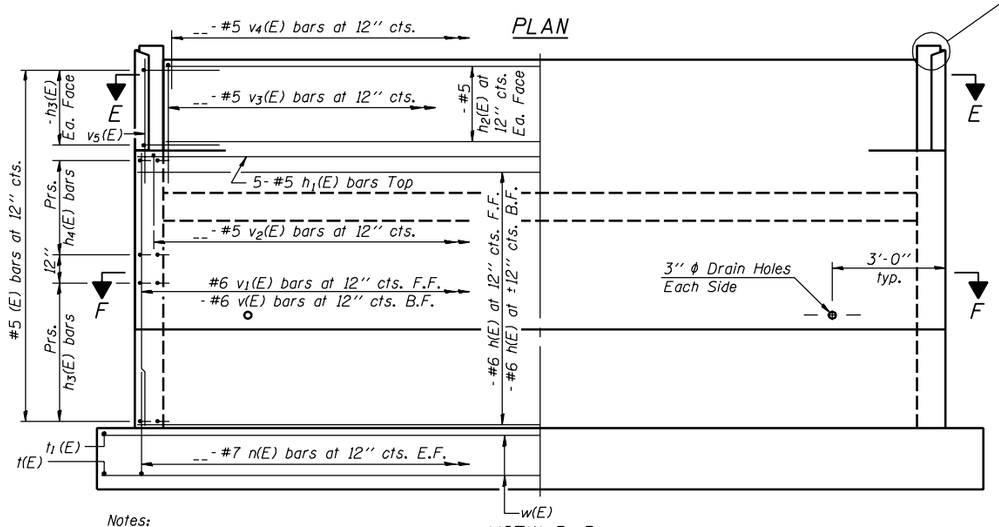

VIEW D-D

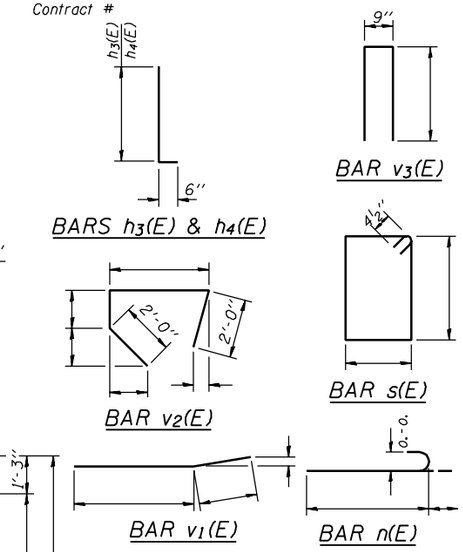

BILL OF MATERIAL

Bar	No.	Size	Length	Shape
h(E)		#6		
h1(E)		#5		
h2(E)		#5		
h3(E)		#5		L
h4(E)		#5		L
h5(E)		#4		
h6(E)		#5		
h7(E)		#5		
h8(E)		#5		
h9(E)		#6		
n(E)		#7		
p(E)		#7		
s(E)		#4		
t(E)				
t1(E)				
v(E)		#6		
v1(E)		#6		
v2(E)		#5		
v3(E)		#5		
v4(E)		#5		
v5(E)		#4		
v6(E)		#5		
v7(E)		#5		
v8(E)		#5		
w(E)		#5		

Concrete Structures	Cu. Yd.	
Reinforcement Bars, Epoxy Coated	Pound	
Piles	Foot	
Test Piles	Each	
Structure Excavation	Cu. Yd.	

Notes:
Space reinforcement in cap to miss anchor bolts.
Reinforcement bars designated (E) shall be epoxy coated.

DESIGNED -	- 200
CHECKED -	EXAMINED
DRAWN -	ENGINEER OF BRIDGE DESIGN
CHECKED -	PASSED
	ENGINEER OF BRIDGES AND STRUCTURES

AV-S-0 10-22-04

STATE OF ILLINOIS
DEPARTMENT OF TRANSPORTATION

ROUTE NO.	SECTION	COUNTY	TOTAL SHEETS	SHEET NO.
-				
-	-	-		
FED. ROAD DIST. NO. 7		ILLINOIS	FED. AID PROJECT-	

SHEET NO. -
- SHEETS

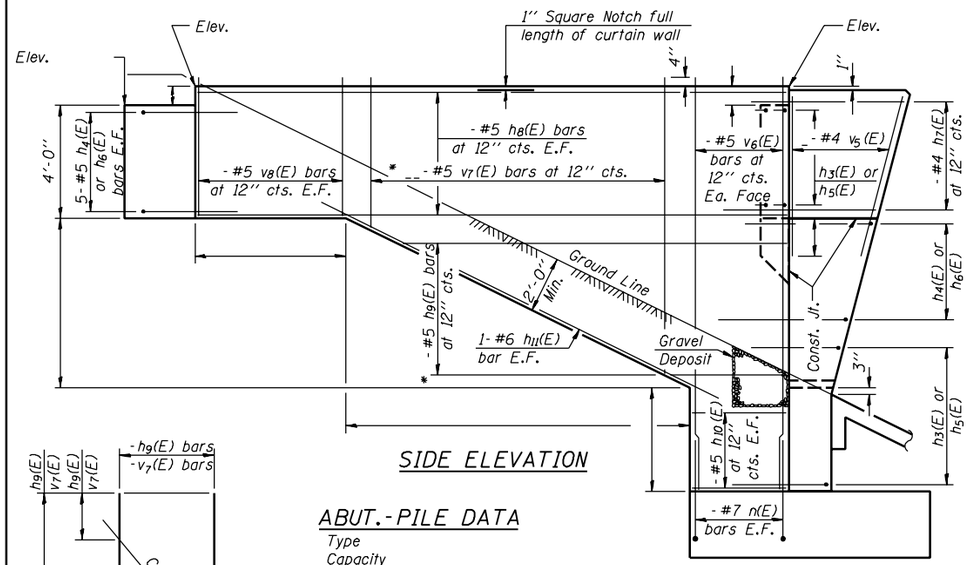

SIDE ELEVATION

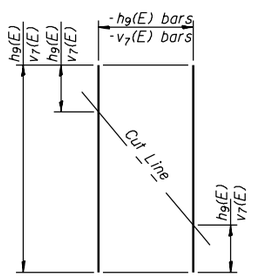

FIELD CUTTING DIAGRAM

* Order $h_9(E)$ & $v_7(E)$ bars full length. Cut to fit as shown and use remainder of bars in other face.

ABUT.-PILE DATA

Type
Capacity
Est. Length
No. Req'd.

APPR. BENT-PILE DATA

Type
Capacity
Est. Length
No. Req'd.

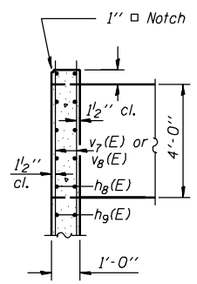

SECTION C-C

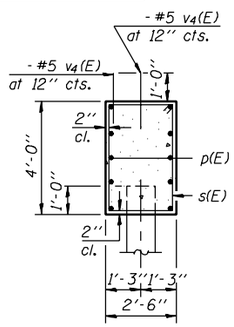

SECTION B-B

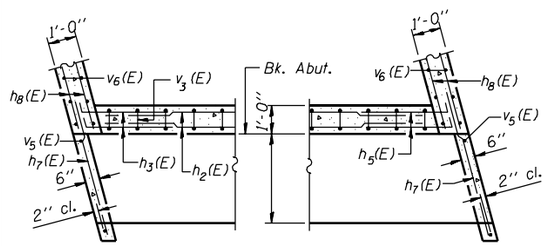

SECTION E-E

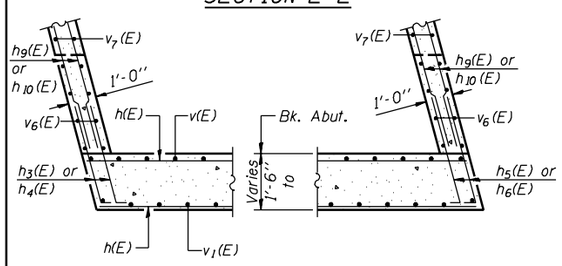

SECTION F-F

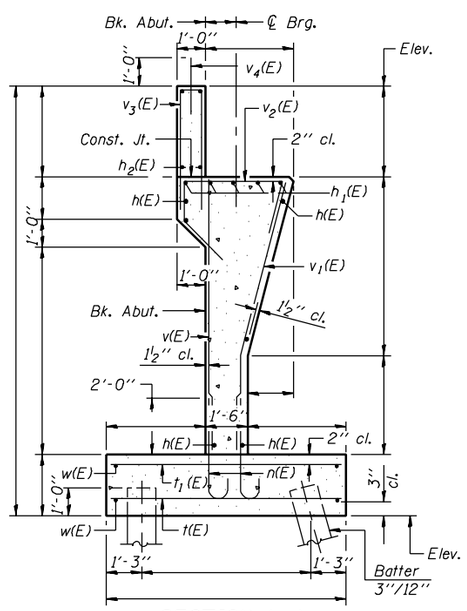

SECTION A-A

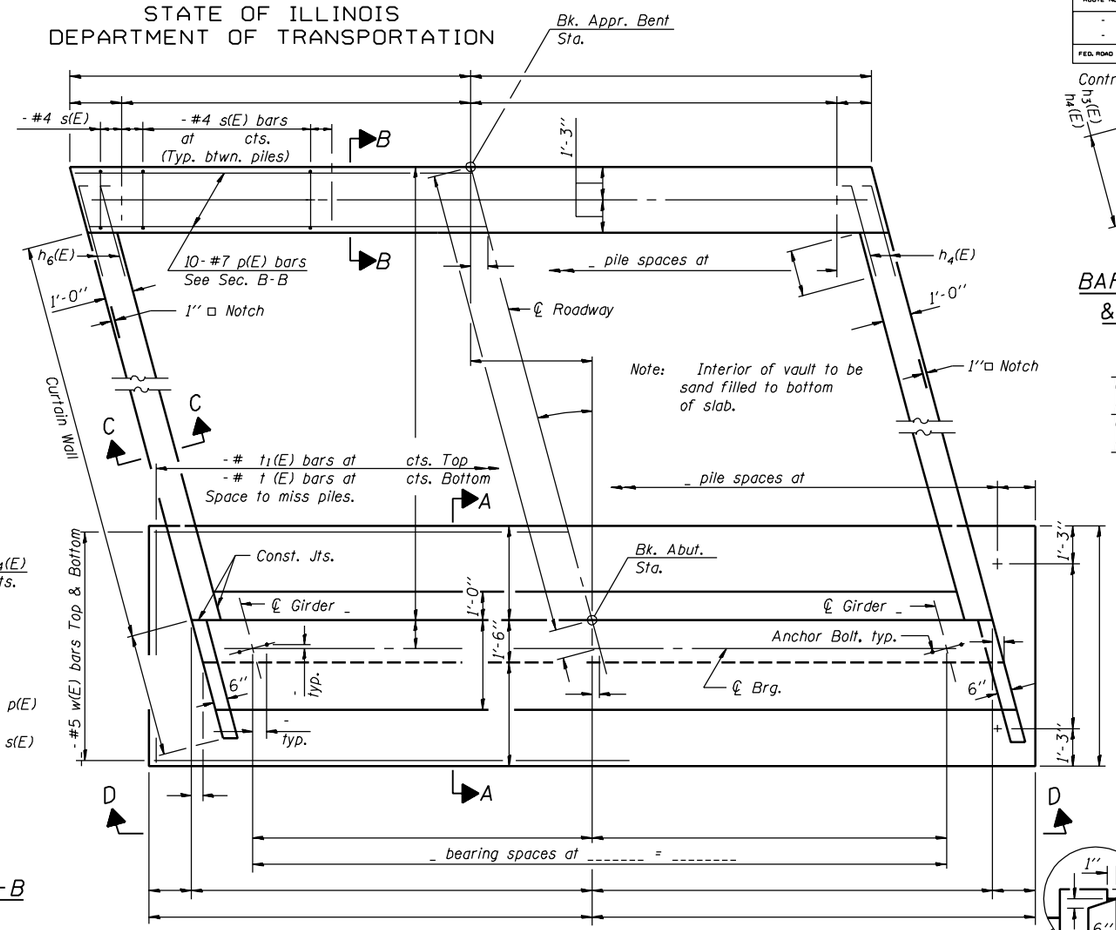

PLAN

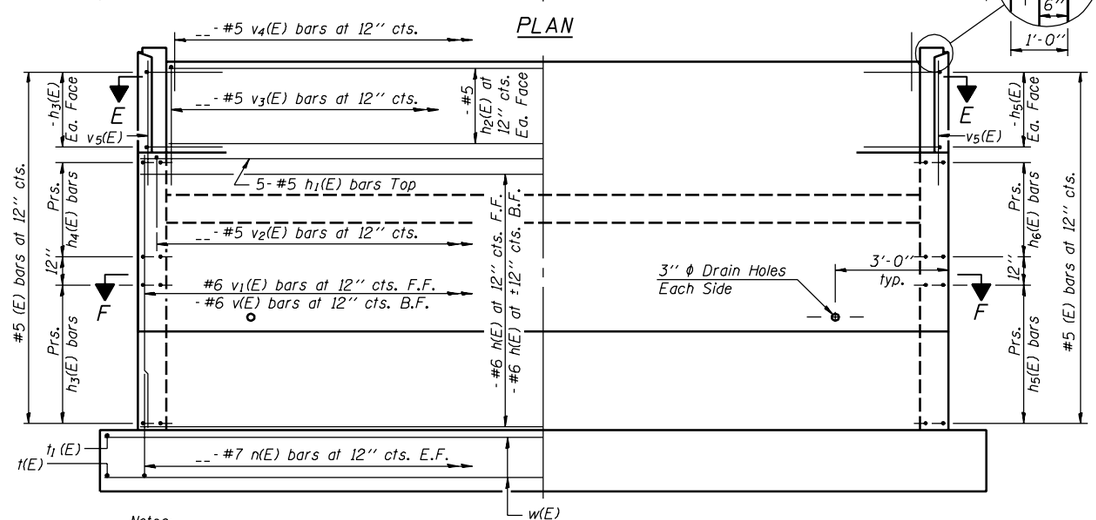

VIEW D-D

Notes:
Space reinforcement in cap to miss anchor bolts.
Reinforcement bars designated (E) shall be epoxy coated.

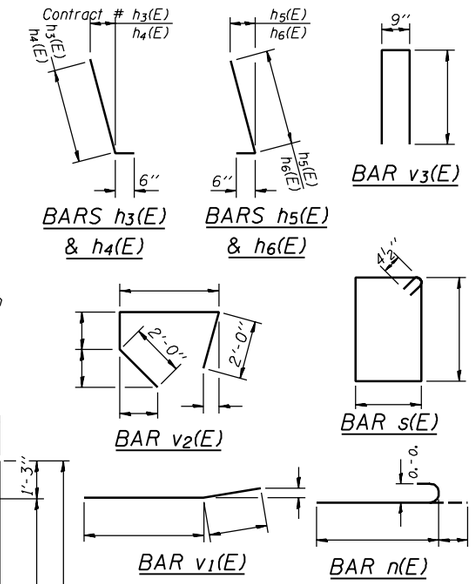

BILL OF MATERIAL

Bar	No.	Size	Length	Shape
h(E)		#6		
h1(E)		#5		
h2(E)		#5		
h3(E)		#5		L
h4(E)		#5		L
h5(E)		#5		J
h6(E)		#5		J
h7(E)		#4		
h8(E)		#5		
h9(E)		#5		
h10(E)		#5		
h11(E)		#6		
n(E)		#7		
p(E)		#7		
s(E)		#4		
t(E)				
t1(E)				
v(E)		#6		
v1(E)		#6		
v2(E)		#5		
v3(E)		#5		
v4(E)		#5		
v5(E)		#4		
v6(E)		#5		
v7(E)		#5		
v8(E)		#5		
w(E)		#5		

Concrete Structures	Cu. Yd.	
Reinforcement Bars, Epoxy Coated	Pound	
	Foot	
Test Piles	Each	
Structure Excavation	Cu. Yd.	

DESIGNED -	- 200
CHECKED -	EXAMINED
DRAWN -	PASSED
CHECKED -	

ENGINEER OF BRIDGE DESIGN
ENGINEER OF BRIDGES AND STRUCTURES

AV-S-L 10-22-04

STATE OF ILLINOIS
DEPARTMENT OF TRANSPORTATION

ROUTE NO.	SECTION	COUNTY	TOTAL SHEETS	SHEET NO.
-				
-	-	-		
FED. ROAD DIST. NO. 7		ILLINOIS	FED. AID PROJECT-	

SHEET NO. -
- SHEETS

Contract #

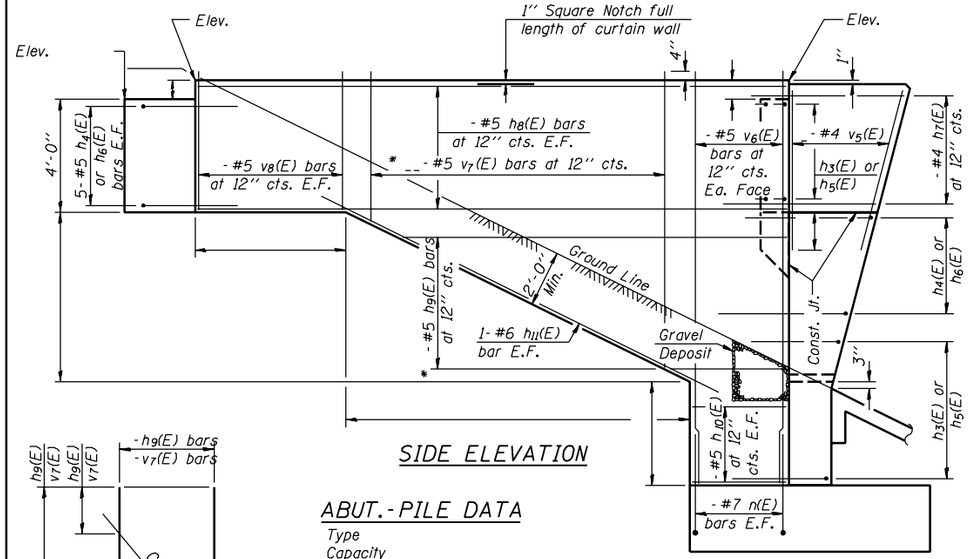

SIDE ELEVATION

ABUT.-PILE DATA
Type
Capacity
Est. Length
No. Req'd.

APPR. BENT-PILE DATA
Type
Capacity
Est. Length
No. Req'd.

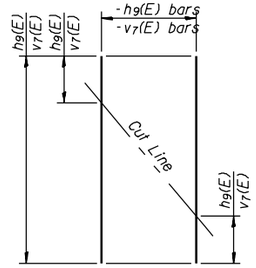

FIELD CUTTING DIAGRAM
* Order $h_9(E)$ & $v_7(E)$ bars full length. Cut to fit as shown and use remainder of bars in other face.

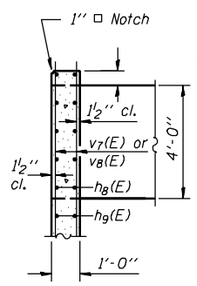

SECTION C-C

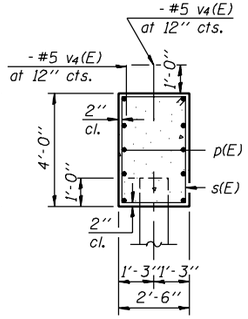

SECTION B-B

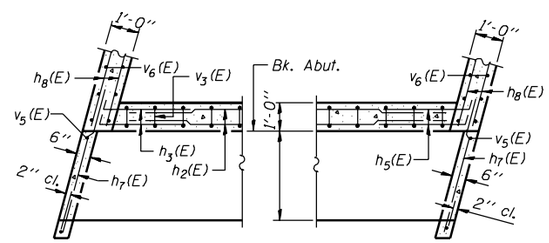

SECTION E-E

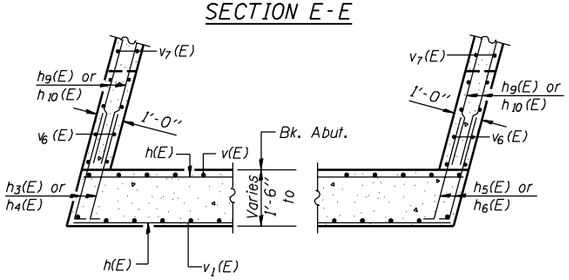

SECTION F-F

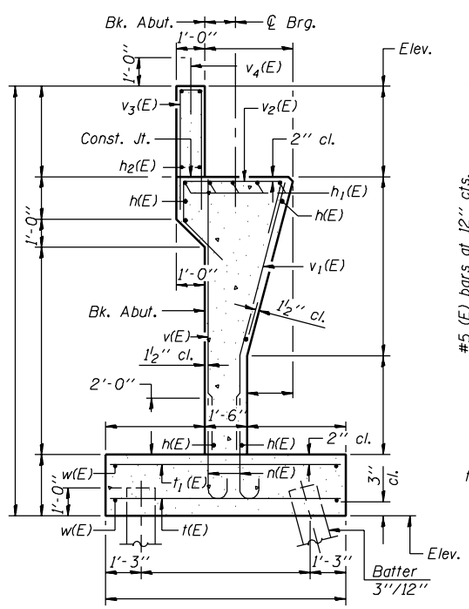

SECTION A-A

BARS $h_5(E)$ & $h_6(E)$

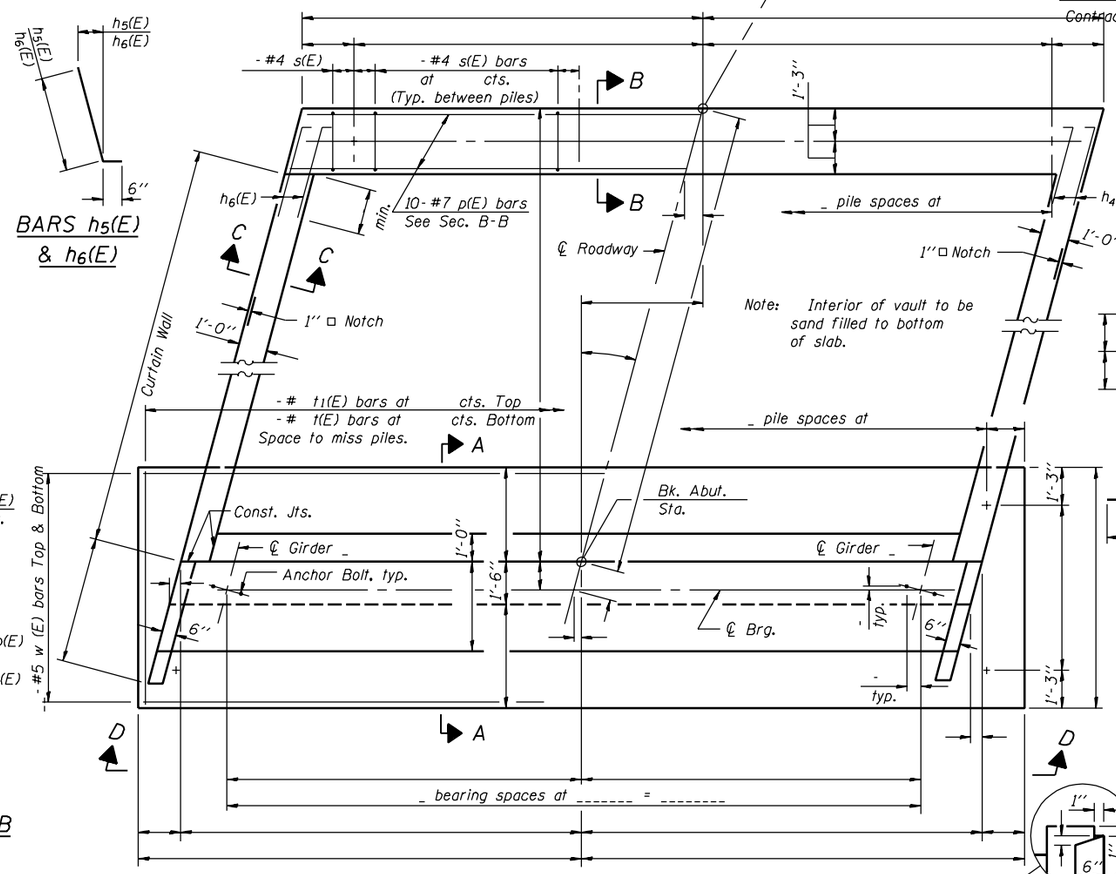

PLAN

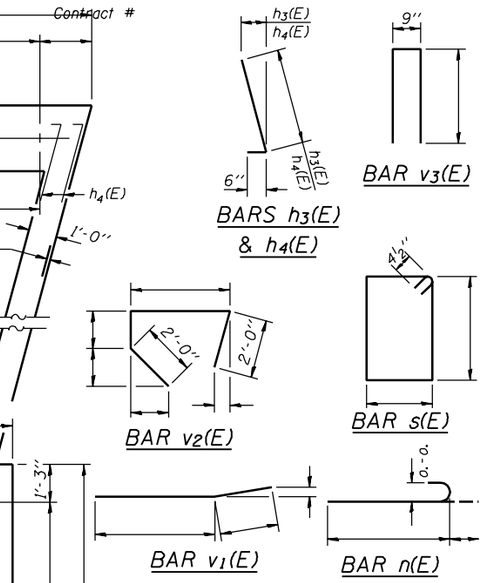

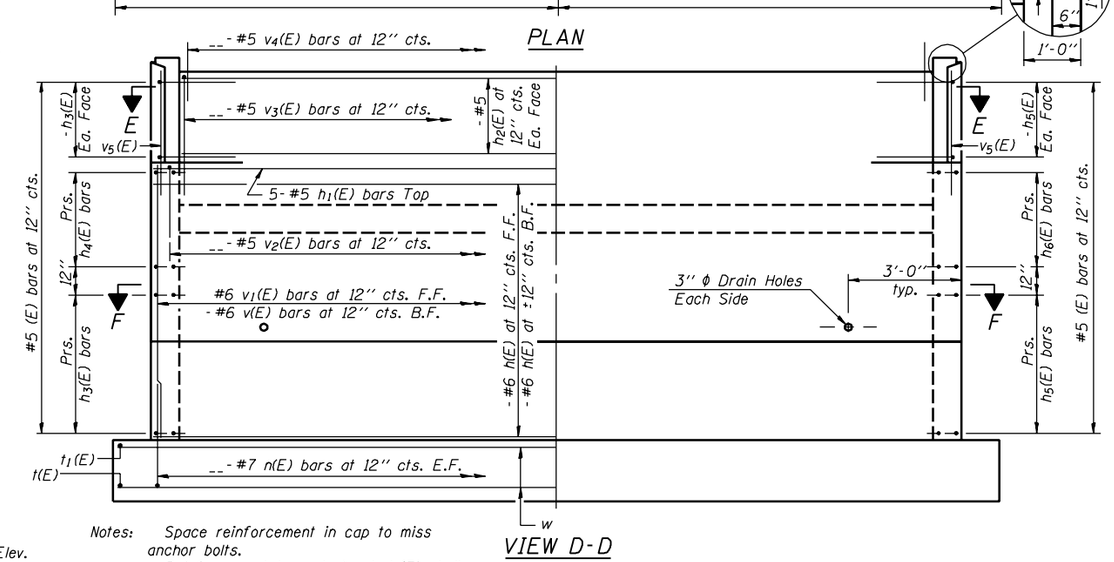

VIEW D-D

Notes: Space reinforcement in cap to miss anchor bolts.
Reinforcement bars designated (E) shall be epoxy coated.

BILL OF MATERIAL

Bar	No.	Size	Length	Shape
h(E)		#6		
$h_1(E)$		#5		
$h_2(E)$		#5		
$h_3(E)$		#5		L
$h_4(E)$		#5		L
$h_5(E)$		#5		J
$h_6(E)$		#5		J
$h_7(E)$		#4		
$h_8(E)$		#5		
$h_9(E)$		#5		
$h_{10}(E)$		#5		
$h_{11}(E)$		#6		
n(E)		#7		
p(E)		#7		
s(E)		#4		
t(E)				
$t_1(E)$				
v(E)		#6		
$v_1(E)$		#6		
$v_2(E)$		#5		
$v_3(E)$		#5		
$v_4(E)$		#5		
$v_5(E)$		#4		
$v_6(E)$		#5		
$v_7(E)$		#5		
$v_8(E)$		#5		
w(E)		#5		
Concrete Structures			Cu. Yd.	
Reinforcement Bars, Epoxy Coated			Pound	
Piles			Foot	
Test Piles			Each	
Structure Excavation			Cu. Yd.	

DESIGNED -	-	200
CHECKED -	EXAMINED	
DRAWN -		ENGINEER OF BRIDGE DESIGN
CHECKED -	PASSED	
		ENGINEER OF BRIDGES AND STRUCTURES

AV-S-R 10-22-04

Notes: Space reinforcement in cap to miss anchor bolts.
Pour steps monolithically with cap.

STATE OF ILLINOIS
DEPARTMENT OF TRANSPORTATION

ROUTE NO.	SECTION	COUNTY	TOTAL SHEETS	SHEET NO.
-	-	-		
FED. ROAD DIST. NO. 7		ILLINOIS	FED. AID PROJECT-	

SHEET NO. -
- SHEETS

Contract #

PILE DATA

Type:
Capacity:
Est. Length:
No. Req'd:

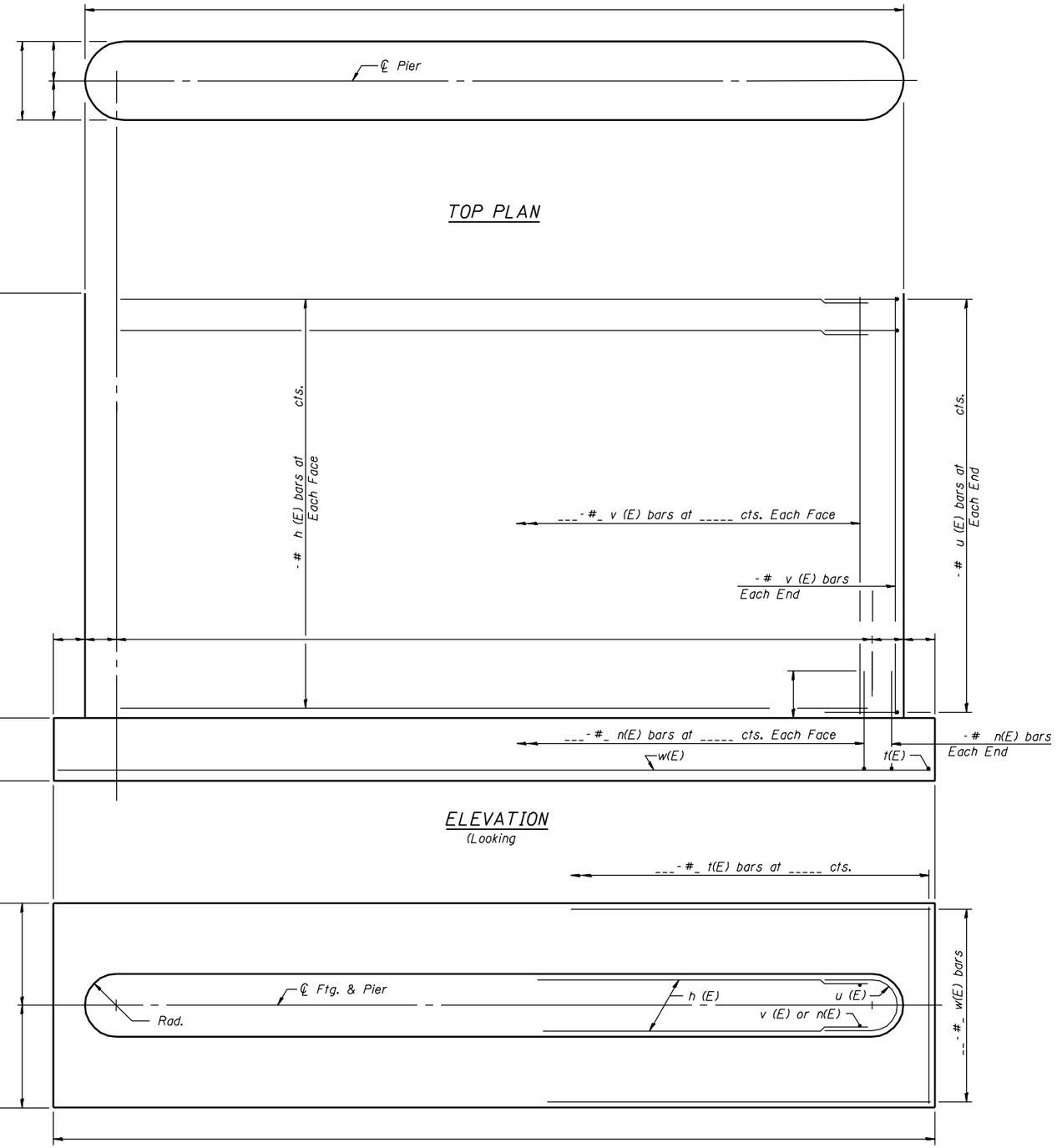

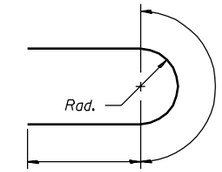

BAR u (E)

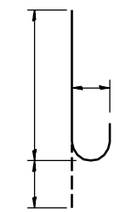

BAR n(E)

BILL OF MATERIAL

Bar	No.	Size	Length	Shape
h (E)		#		
n(E)		#		
t (E)		#		
u (E)		#		
v (E)		#		
w (E)		#		
Concrete Structures			Cu. Yd.	
Reinforcement Bars, Epoxy Coated			Pound	
Structure Excavation			Cu. Yd.	

Reinforcement Bars designated (E) shall be epoxy coated.

DESIGNED -	
CHECKED -	
DRAWN -	
CHECKED -	

- 200

EXAMINED
ENGINEER OF BRIDGE DESIGN

PASSED
ENGINEER OF BRIDGES AND STRUCTURES

P-1 10-22-04

STATE OF ILLINOIS
DEPARTMENT OF TRANSPORTATION

ROUTE NO.	SECTION	COUNTY	TOTAL SHEETS	SHEET NO.
-				
-	-	-		
FED. ROAD DIST. NO. 7		ILLINOIS	FED. AID PROJECT-	

SHEET NO. -
- SHEETS

Contract #

Notes:
Space reinforcement in cap to miss anchor bolts.
Pour steps monolithically with cap.

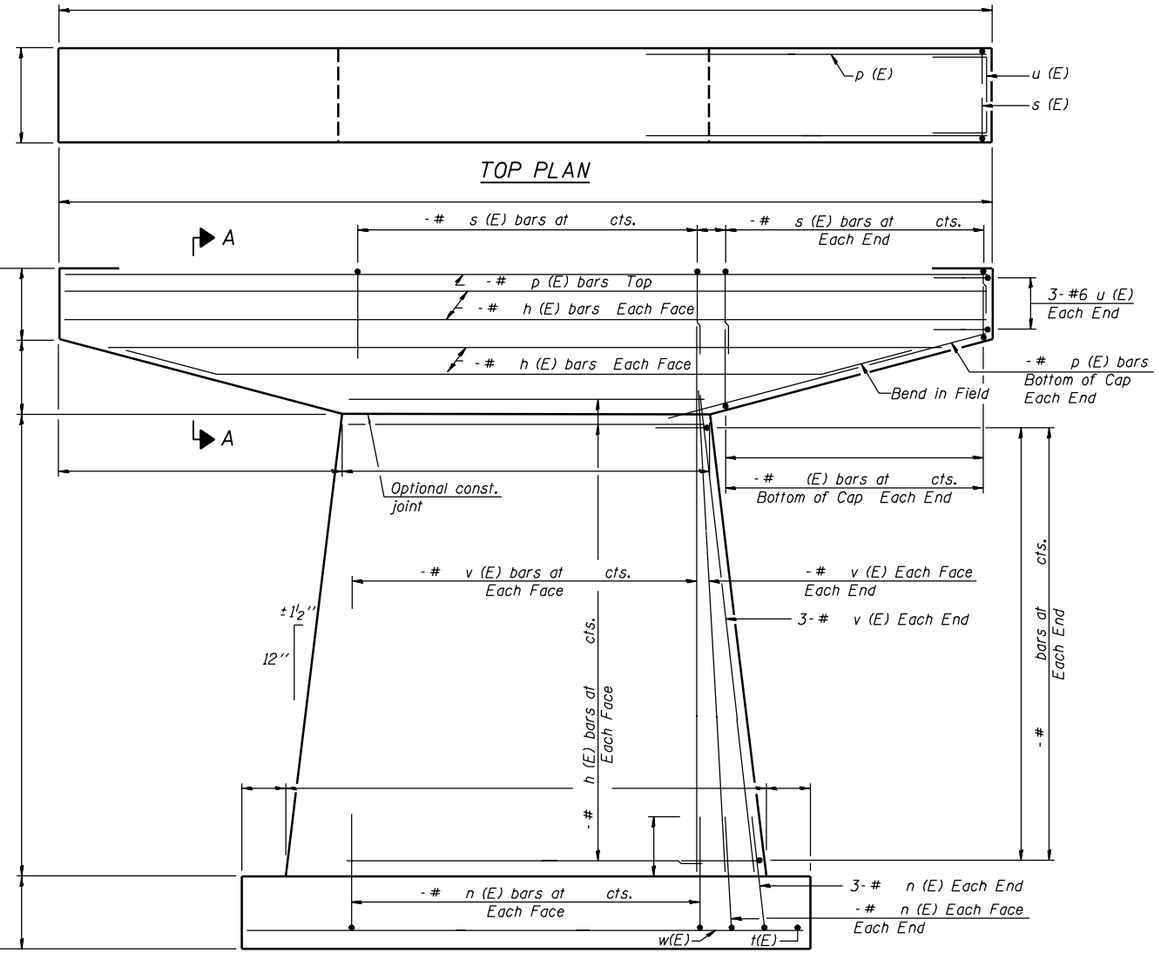

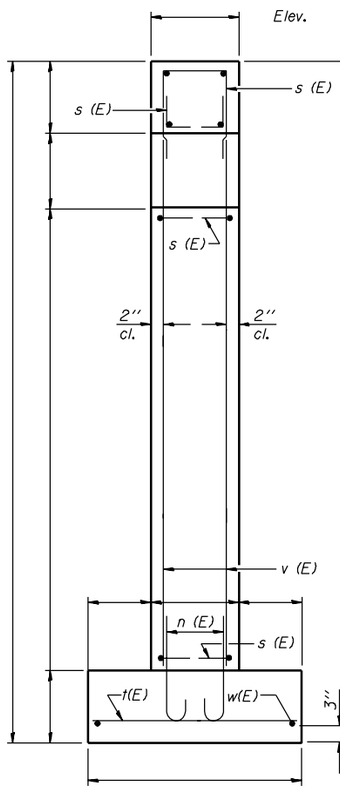

END VIEW

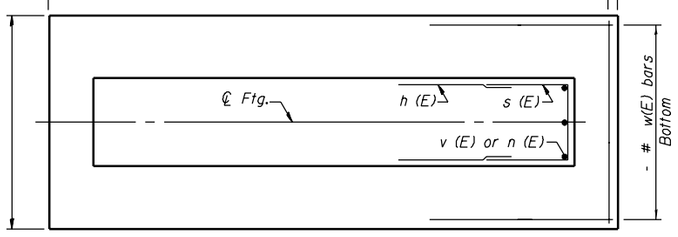

FOOTING PLAN

PILE DATA
Type
Capacity
Est. Length
No. Req'd.

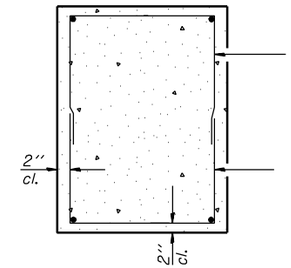

SECTION A-A

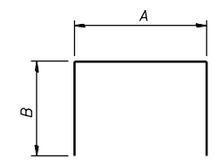

BARS

A & B DIMENSIONS

Bar	A	B

BARS

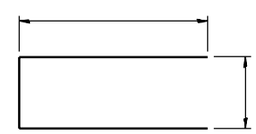

BAR u (E)

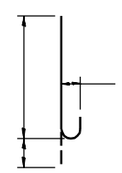

BAR n (E)
& n (E)

BILL OF MATERIAL

Bar	No.	Size	Length	Shape
h (E)				
h (E)				
n (E)				
p (E)				
p (E)				
s (E)				
s (E)				
s (E)				
t (E)				
u (E)				
v (E)				
w (E)				
Structure Excavation			Cu. Yd.	
Concrete Structures			Cu. Yd.	
Reinforcement Bars, Epoxy Coated			Pound	

Reinforcement Bars designated (E) shall be epoxy coated.

DESIGNED -	
CHECKED -	
DRAWN -	
CHECKED -	

- 200

EXAMINED

ENGINEER OF BRIDGE DESIGN

PASSED

ENGINEER OF BRIDGES AND STRUCTURES

P-2

10-22-04

STATE OF ILLINOIS
DEPARTMENT OF TRANSPORTATION

ROUTE NO.	SECTION	COUNTY	TOTAL SHEETS	SHEET NO.
-				
-	-	-		
FED. ROAD DIST. NO. 7		ILLINOIS	FED. AID PROJECT-	

SHEET NO. -
- SHEETS

Contract #

Notes:
Space reinforcement in cap to miss anchor bolts.
Pour steps monolithically with cap.

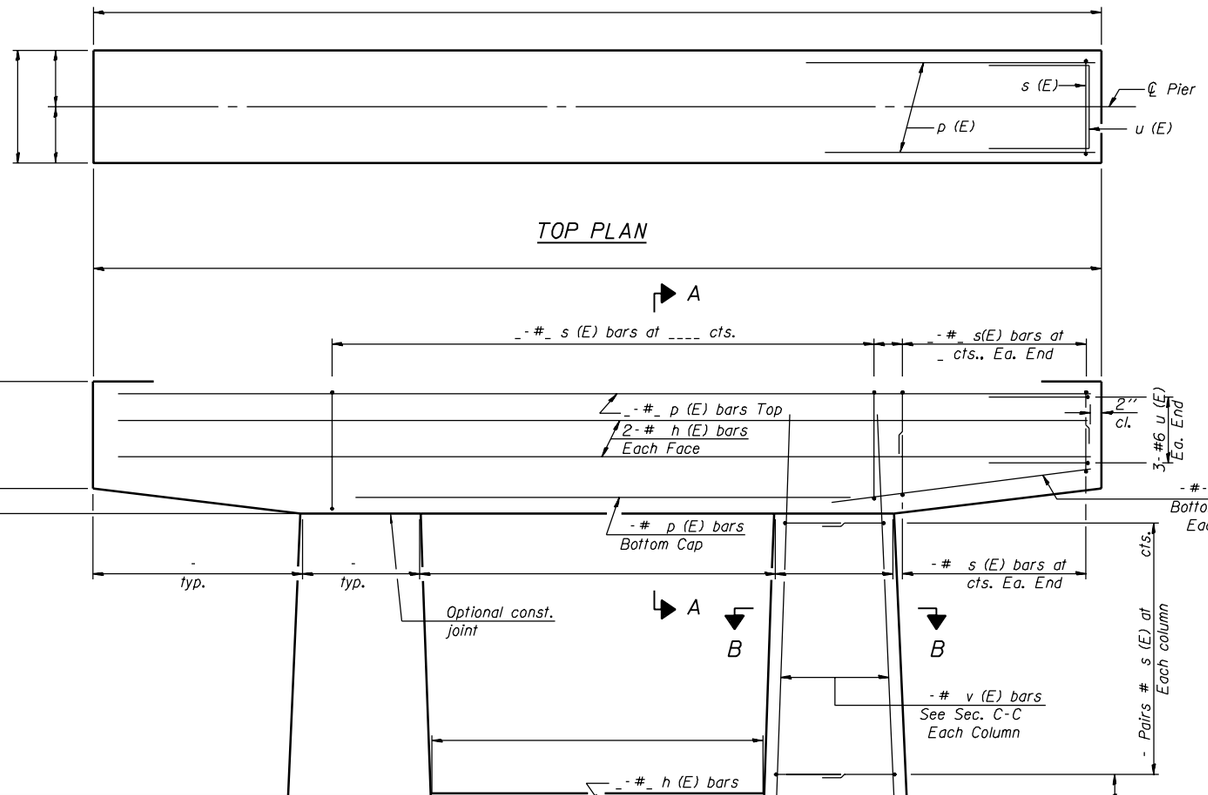

TOP PLAN

ELEVATION
(Looking)

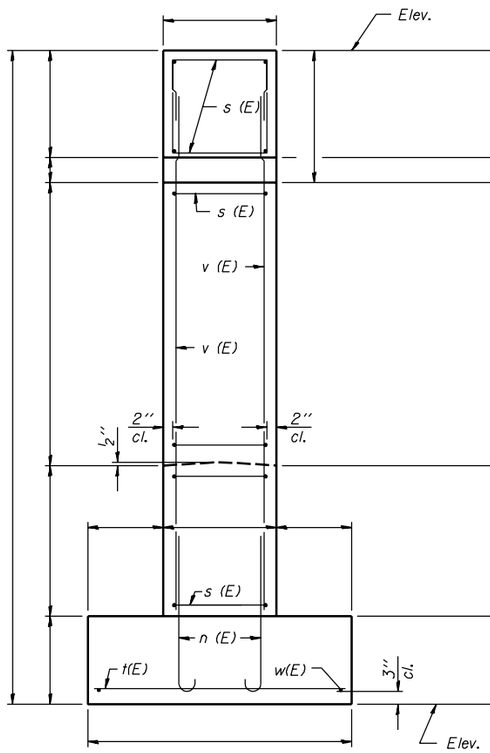

END VIEW

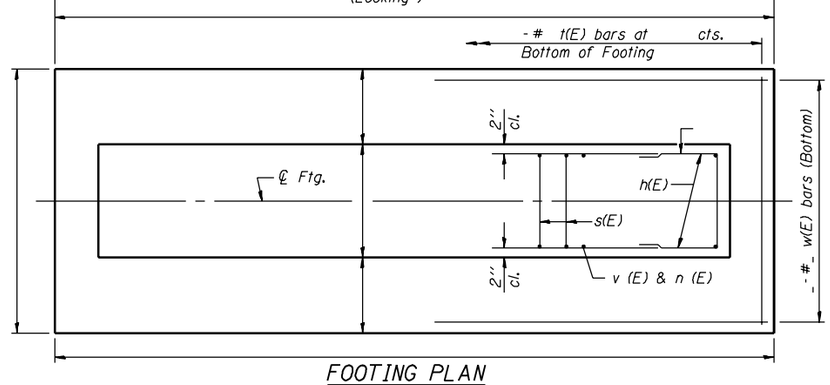

FOOTING PLAN

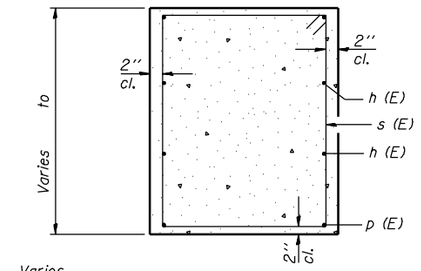

SECTION A-A

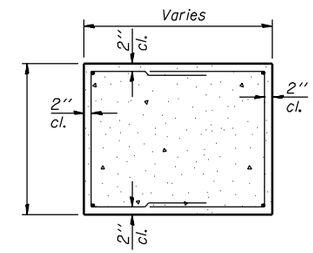

SECTION B-B

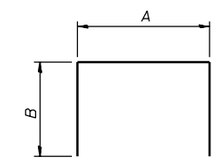

BARS

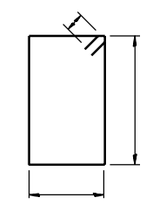

BAR s (E)

A & B DIMENSIONS

Bar	A	B

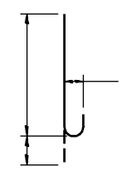

BAR n (E) & n (E)

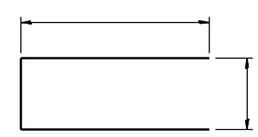

BAR u (E)

PILE DATA
Type -
Capacity -
Est. Length -
No. Req'd -
Test Piles -

BILL OF MATERIAL

Bar	No.	Size	Length	Shape
h (E)				
h (E)				
n(E)				
n (E)				
p (E)				
p (E)				
p (E)				
s (E)				
s (E)				
s (E)				
t (E)				
u (E)				
v (E)				
w (E)				
Structure Excavation		Cu. Yd.		
Concrete Structures		Cu. Yd.		
Reinforcement Bars, Epoxy Coated		Pound		

Reinforcement Bars designated (E) shall be epoxy coated.

DESIGNED -	
CHECKED -	
DRAWN -	
CHECKED -	

- 200
EXAMINED
ENGINEER OF BRIDGE DESIGN
PASSED
ENGINEER OF BRIDGES AND STRUCTURES

P-3 10-22-04

STATE OF ILLINOIS
DEPARTMENT OF TRANSPORTATION

ROUTE NO.	SECTION	COUNTY	TOTAL SHEETS	SHEET NO.
-	-	-		
FED. ROAD DIST. NO. 7		ILLINOIS	FED. AID PROJECT-	

SHEET NO. -
- SHEETS

Contract #

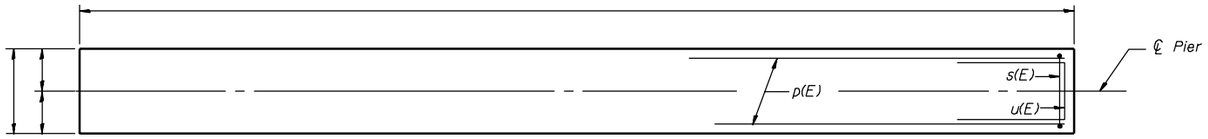

TOP PLAN

Note:
Space reinforcement in cap to miss anchor bolts.
Pour steps monolithically with cap.

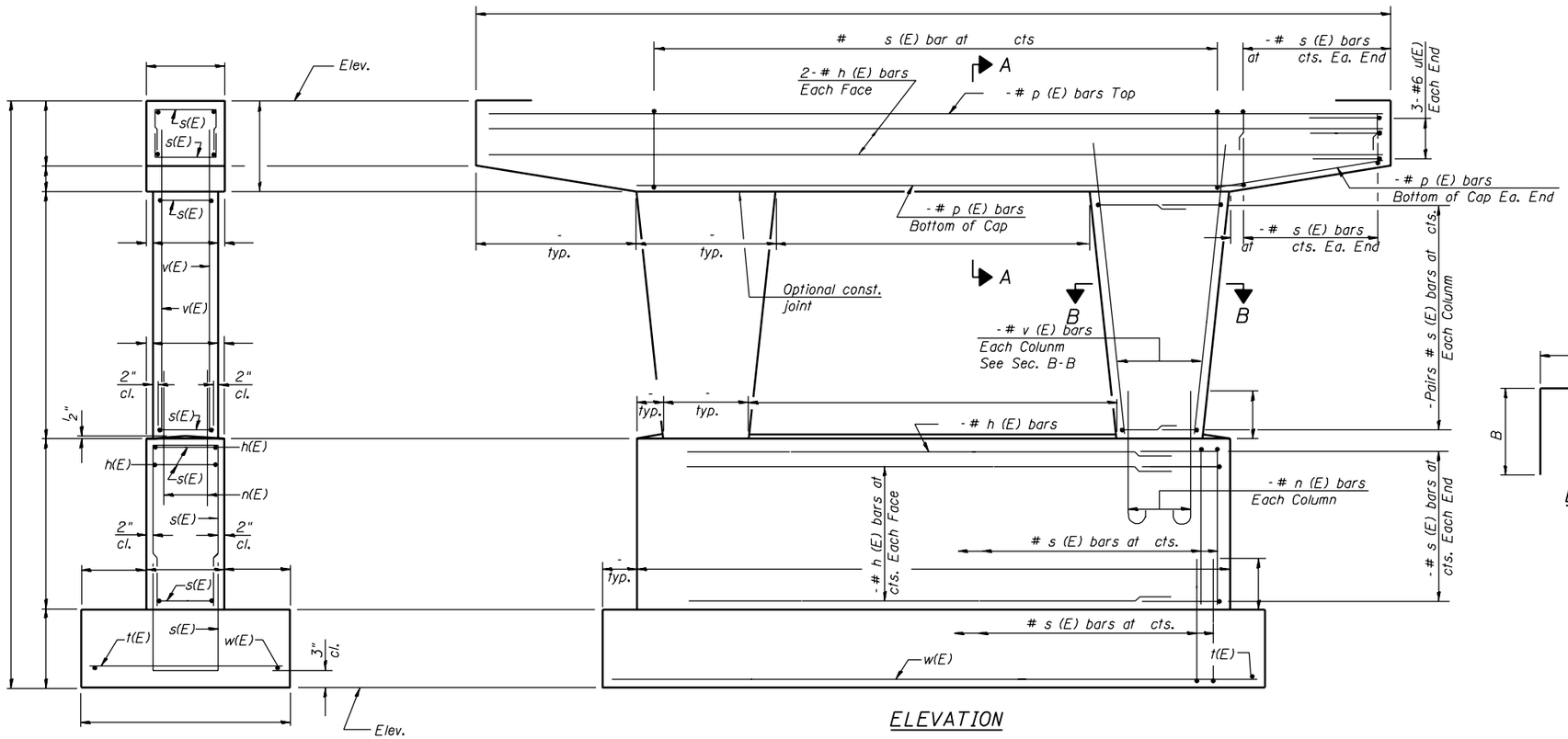

END VIEW

ELEVATION

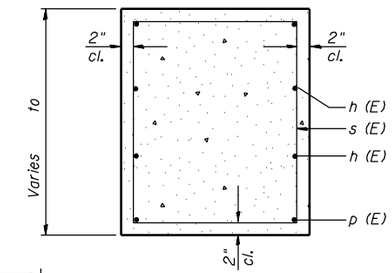

SECTION A-A

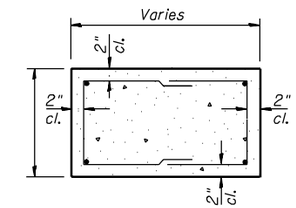

SECTION B-B

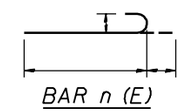

BAR n (E)

BILL OF MATERIAL

Bar	No.	Size	Length	Shape
h (E)				
h (E)				
n (E)				
p (E)				
p (E)				
p (E)				
s (E)				
s (E)				
s (E)				
s (E)				
s (E)				
t (E)				
u (E)				
v (E)				
w (E)				
Structure Excavation			Cu. Yd.	
Concrete Structures			Cu. Yd.	
Reinforcement Bars, Epoxy Coated			Pound	

Reinforcement Bars designated (E) shall be epoxy coated.

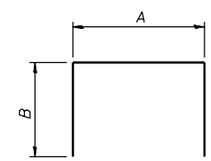

BARS

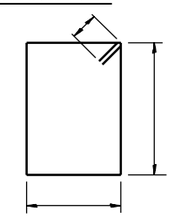

BAR s (E)

A & B DIMENSIONS

Bar	A	B

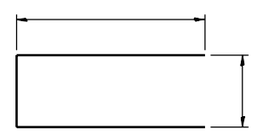

BAR u (E)

PILE DATA

Type -
Capacity -
Est. Length -
No. Reqd. -
Test Piles -

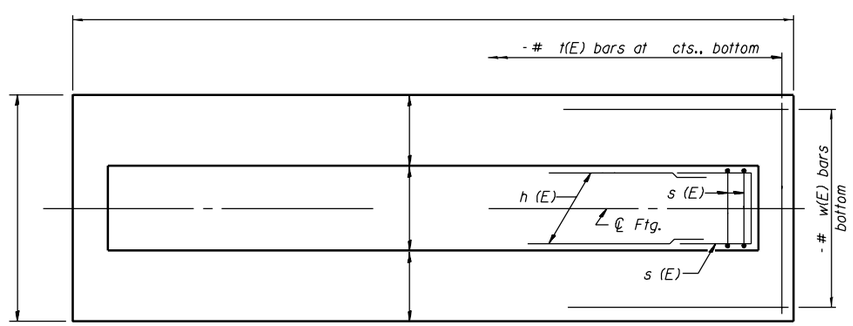

FOOTING PLAN

DESIGNED -	
CHECKED -	
DRAWN -	
CHECKED -	

- 200
EXAMINED
ENGINEER OF BRIDGE DESIGN
PASSED
ENGINEER OF BRIDGES AND STRUCTURES

P-4 10-22-04

Note:
Space reinforcement in cap to miss anchor bolts.
Pour steps monolithically with cap.

STATE OF ILLINOIS
DEPARTMENT OF TRANSPORTATION

ROUTE NO.	SECTION	COUNTY	TOTAL SHEETS	SHEET NO.
-	-	-		
FED. ROAD DIST. NO. 7		ILLINOIS	FED. AID PROJECT-	

SHEET NO. -
- SHEETS

Contract #

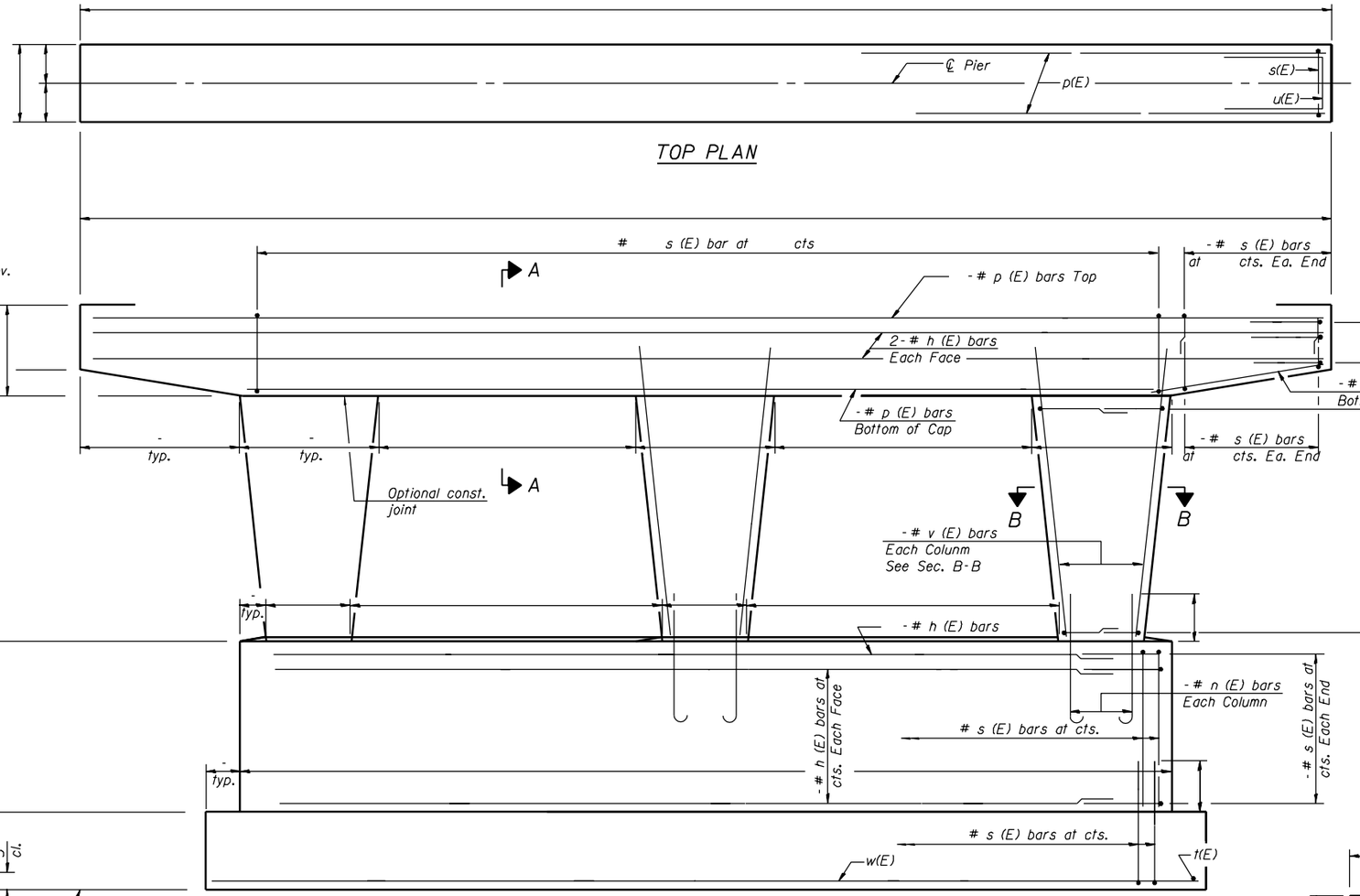

ELEVATION
(Looking)

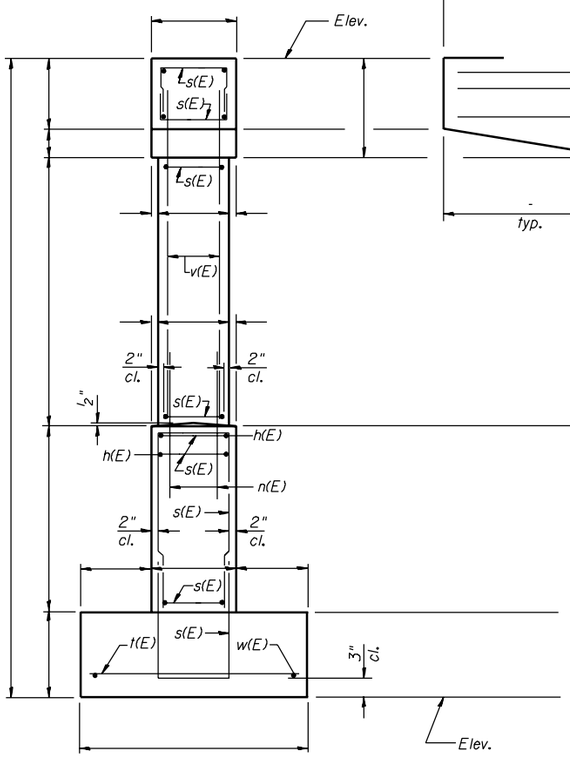

END VIEW

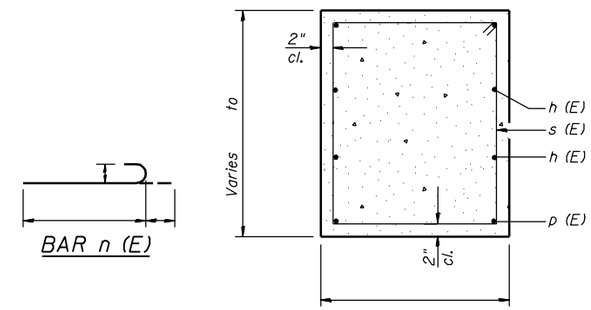

SECTION A-A

BAR n (E)

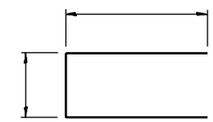

BAR u (E)

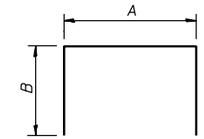

BARS

BILL OF MATERIAL

Bar	No.	Size	Length	Shape
h (E)				
h (E)				
n (E)				
p (E)				
p (E)				
p (E)				
s (E)				
s (E)				
s (E)				
s (E)				
s (E)				
s (E)				
t (E)				
u (E)				
v (E)				
w (E)				
Structure Excavation			Cu. Yd.	
Concrete Structures			Cu. Yd.	
Reinforcement Bars, Epoxy Coated			Pound	

Reinforcement Bars designated (E) shall be epoxy coated.

A & B DIMENSIONS

Bar	A	B

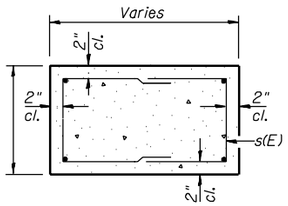

SECTION B-B

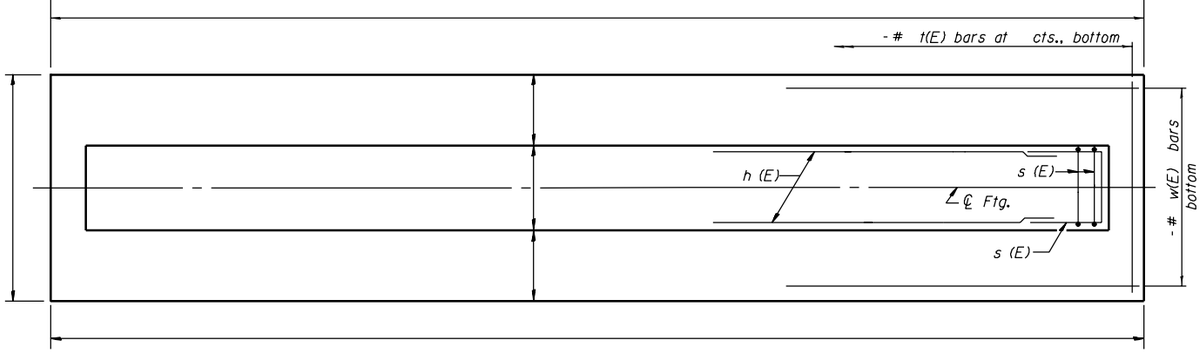

FOOTING PLAN

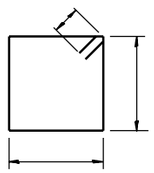

BAR s (E)

PILE DATA

Type -
Capacity -
Est. Length -
No. Reqd. -
Test Piles -

DESIGNED -	
CHECKED -	
DRAWN -	
CHECKED -	

- 200
EXAMINED
ENGINEER OF BRIDGE DESIGN
PASSED
ENGINEER OF BRIDGES AND STRUCTURES

P-5 10-22-04

Notes:
Space reinforcement in cap to miss anchor bolts.
Pour steps monolithically with cap.

STATE OF ILLINOIS
DEPARTMENT OF TRANSPORTATION

ROUTE NO.	SECTION	COUNTY	TOTAL SHEETS	SHEET NO.
-	-	-		
FED. ROAD DIST. NO. 7		ILLINOIS	FED. AID PROJECT-	

SHEET NO. -
- SHEETS

Contract #

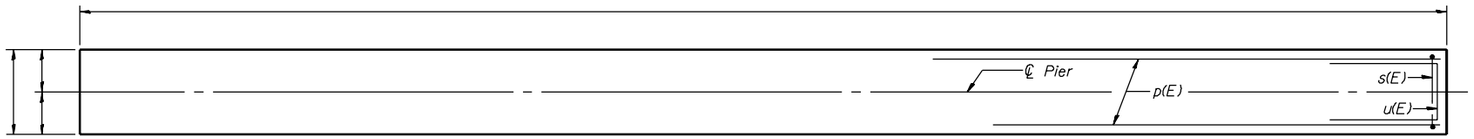

TOP PLAN

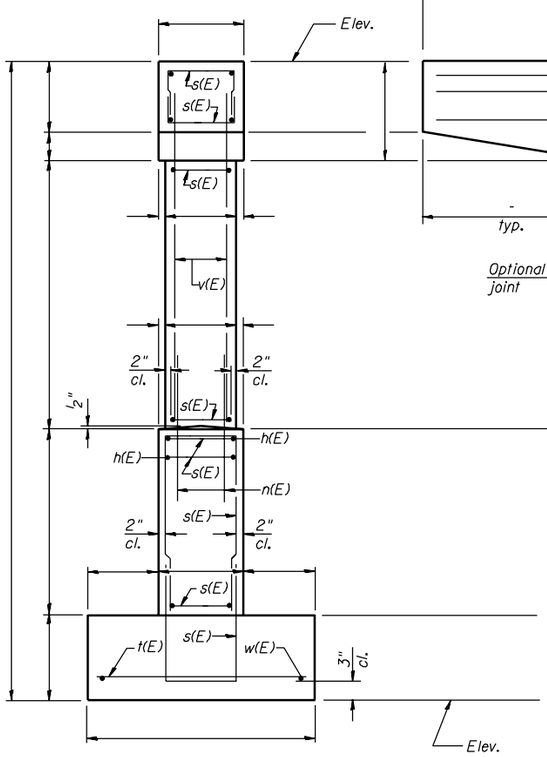

END VIEW

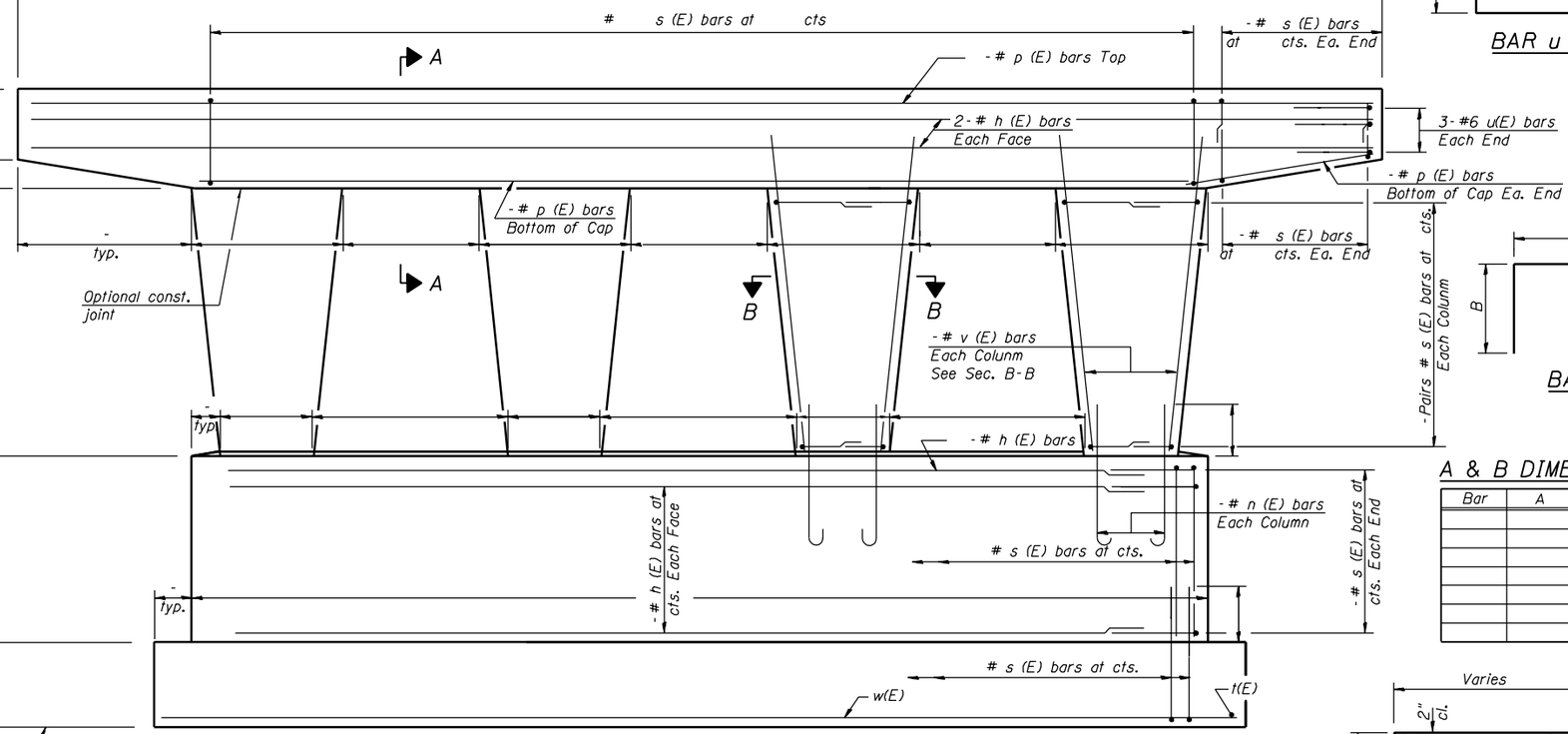

ELEVATION
(Looking)

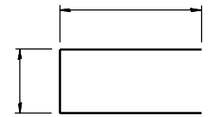

BAR u (E)

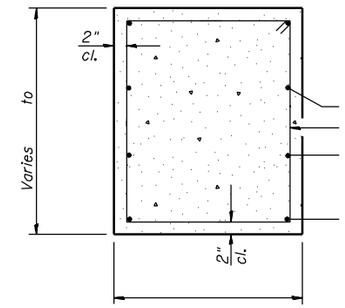

SECTION A-A

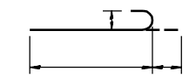

BAR n (E)

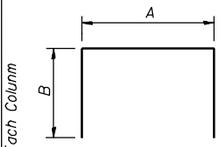

BARS

A & B DIMENSIONS

Bar	A	B

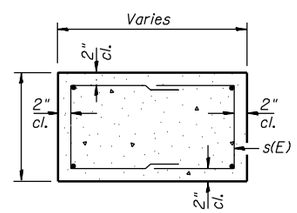

SECTION B-B

BILL OF MATERIAL

Bar	No.	Size	Length	Shape
h (E)				
h (E)				
n (E)				
p (E)				
p (E)				
p (E)				
s (E)				
s (E)				
s (E)				
s (E)				
s (E)				
t (E)				
u (E)				
v (E)				
w (E)				
Structure Excavation			Cu. Yd.	
Concrete Structures			Cu. Yd.	
Reinforcement Bars, Epoxy Coated			Pound	

Reinforcement Bars designated (E) shall be epoxy coated.

PILE DATA

Type -
Capacity -
Est. Length -
No. Reqd. -
Test Piles -

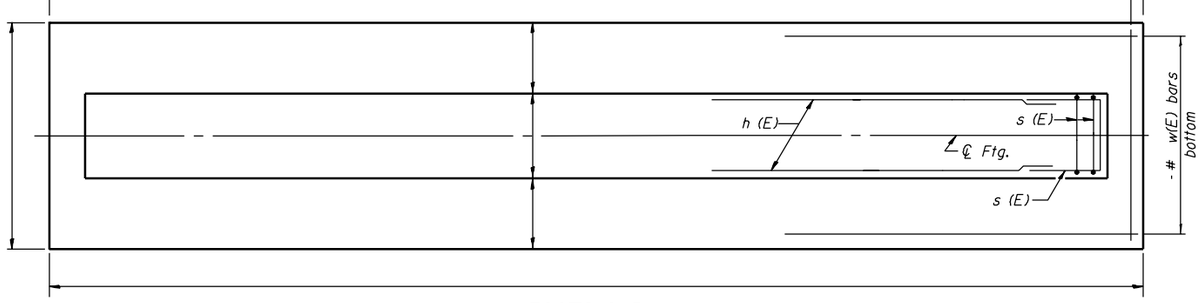

FOOTING PLAN

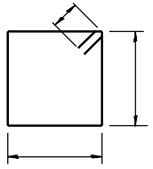

BAR s (E)

DESIGNED -	
CHECKED -	
DRAWN -	
CHECKED -	

- 200
EXAMINED
ENGINEER OF BRIDGE DESIGN
PASSED
ENGINEER OF BRIDGES AND STRUCTURES

P-6 10-22-04

Notes:
Space reinforcement in cap to miss anchor bolts.
Pour steps monolithically with cap.

STATE OF ILLINOIS
DEPARTMENT OF TRANSPORTATION

ROUTE NO.	SECTION	COUNTY	TOTAL SHEETS	SHEET NO.
-	-	-		
FED. ROAD DIST. NO. 7		ILLINOIS	FED. AID PROJECT-	

SHEET NO. -
- SHEETS

Contract #

PILE DATA

Type:
Capacity:
Est. Length:
No. Req'd:

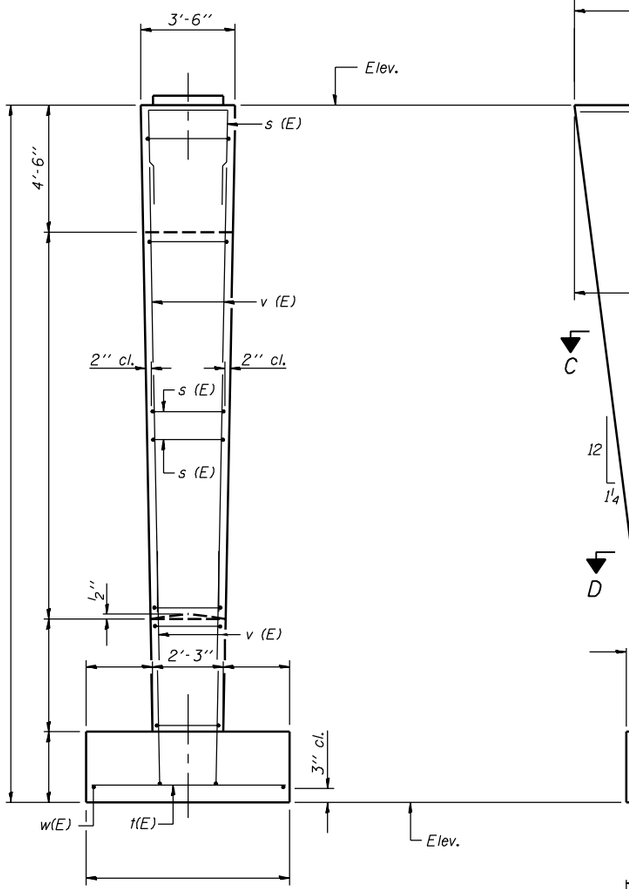

END VIEW

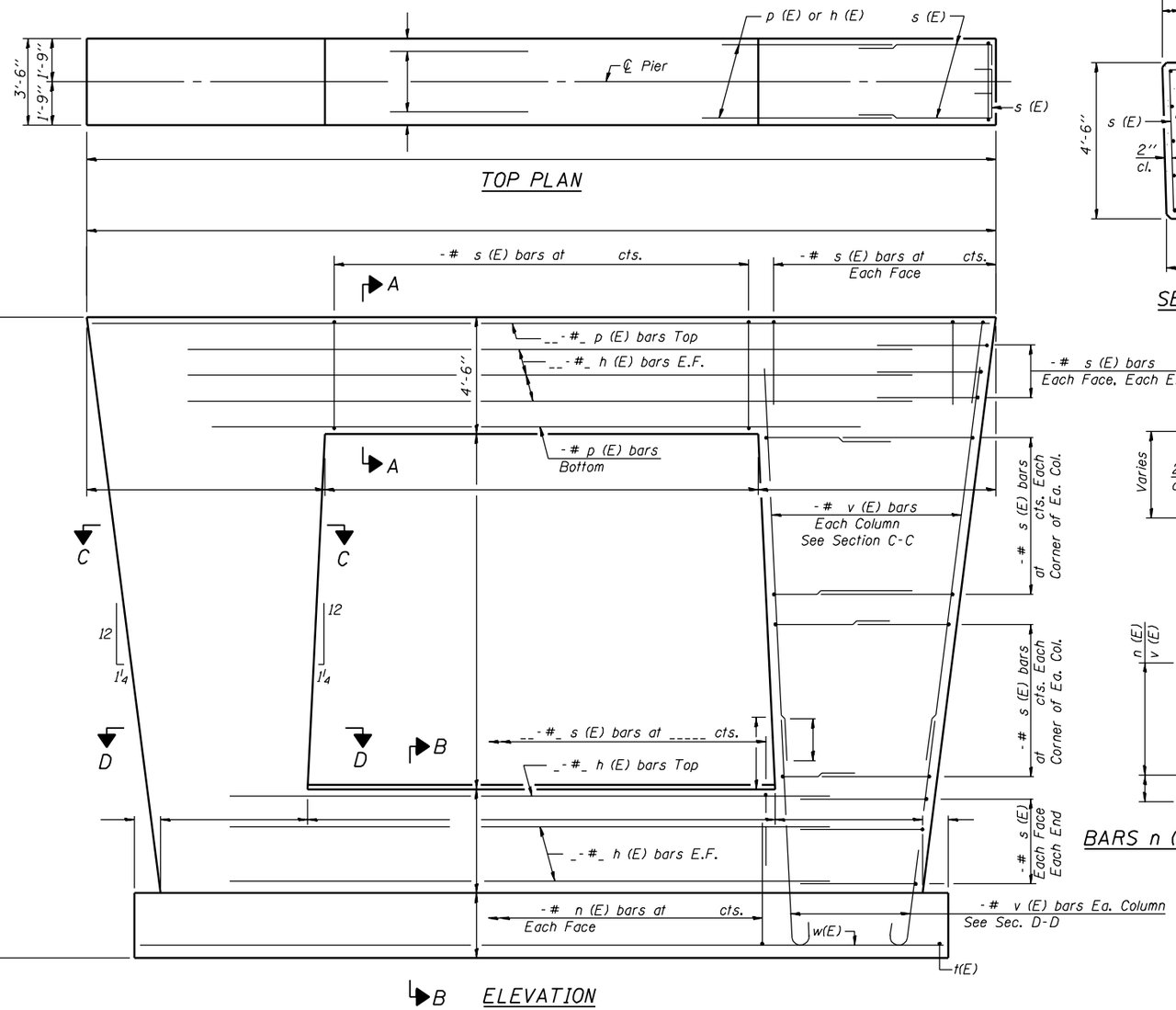

ELEVATION

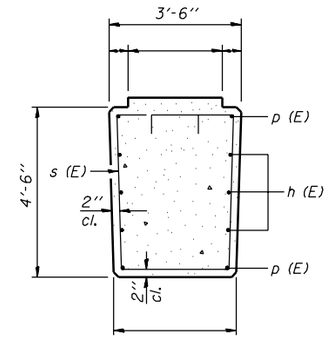

SECTION A-A

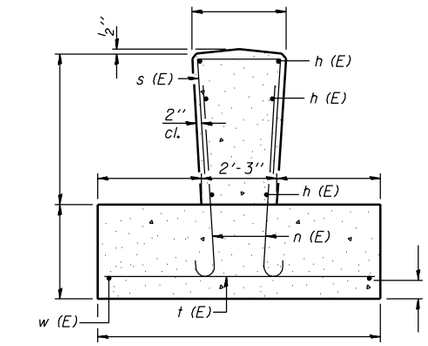

SECTION B-B

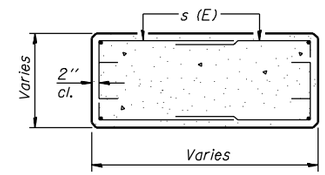

SECTION C-C

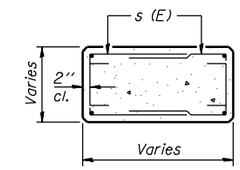

SECTION D-D

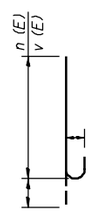

BARS n (E) & v (E)

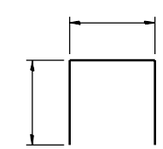

BARS s (E) & s (E)

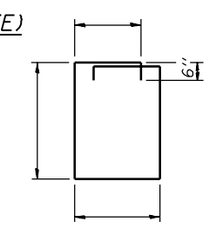

BAR s (E)

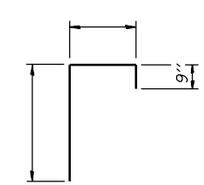

BARS s (E) & s (E)

BILL OF MATERIAL

Bar	No.	Size	Length	Shape
h (E)		#		
h (E)		#		
n (E)		#		
p (E)		#		
p (E)		#		
s (E)		#		
s (E)		#		
s (E)		#		
s (E)		#		
s (E)		#		
t(E)		#		
v (E)		#		
v (E)		#		
w(E)		#		
Structure Excavation			Cu. Yd.	
Concrete Structures			Cu. Yd.	
Reinforcement Bars, Epoxy Coated			Pound	

Reinforcement Bars designated (E) shall be epoxy coated.

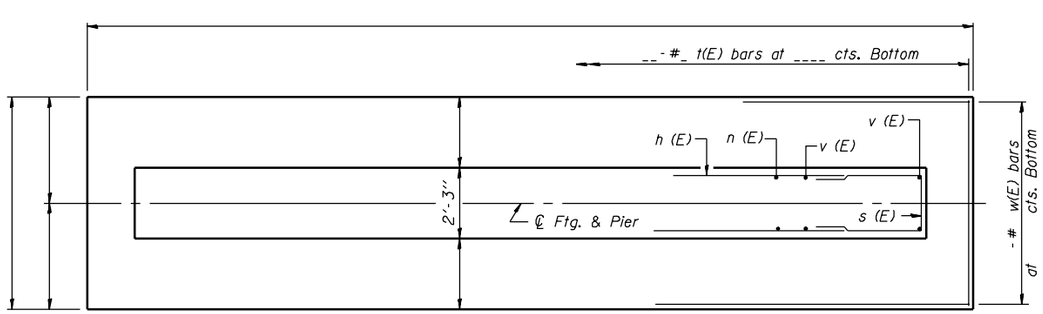

FOOTING PLAN

DESIGNED -	
CHECKED -	
DRAWN -	
CHECKED -	

- 200

EXAMINED
ENGINEER OF BRIDGE DESIGN

PASSED
ENGINEER OF BRIDGES AND STRUCTURES

P-7

10-22-04

Notes:
Space Reinforcement in cap to miss anchor bolts.
Pour steps monolithically with cap.

STATE OF ILLINOIS
DEPARTMENT OF TRANSPORTATION

ROUTE NO.	SECTION	COUNTY	TOTAL SHEETS	SHEET NO.
-				
-	-	-		
FED. ROAD DIST. NO. 7		ILLINOIS	FED. AID PROJECT-	

SHEET NO. -
- SHEETS

Contract #

PILE DATA

Type:
Capacity:
Est. Length:
No. Req'd:

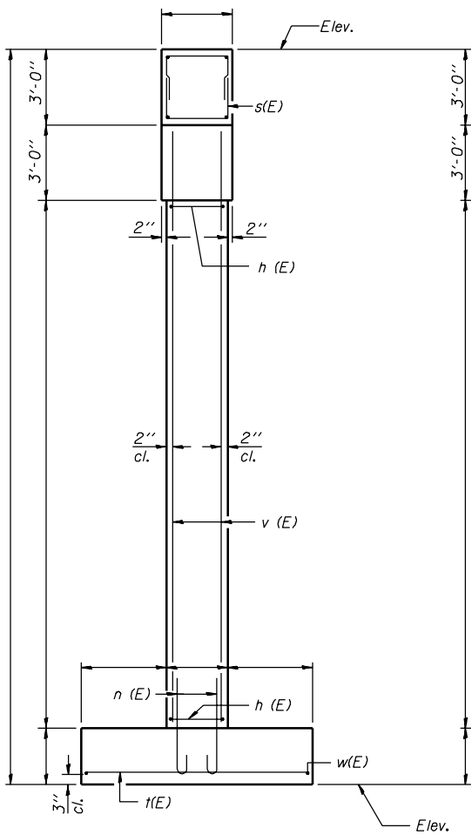

END VIEW

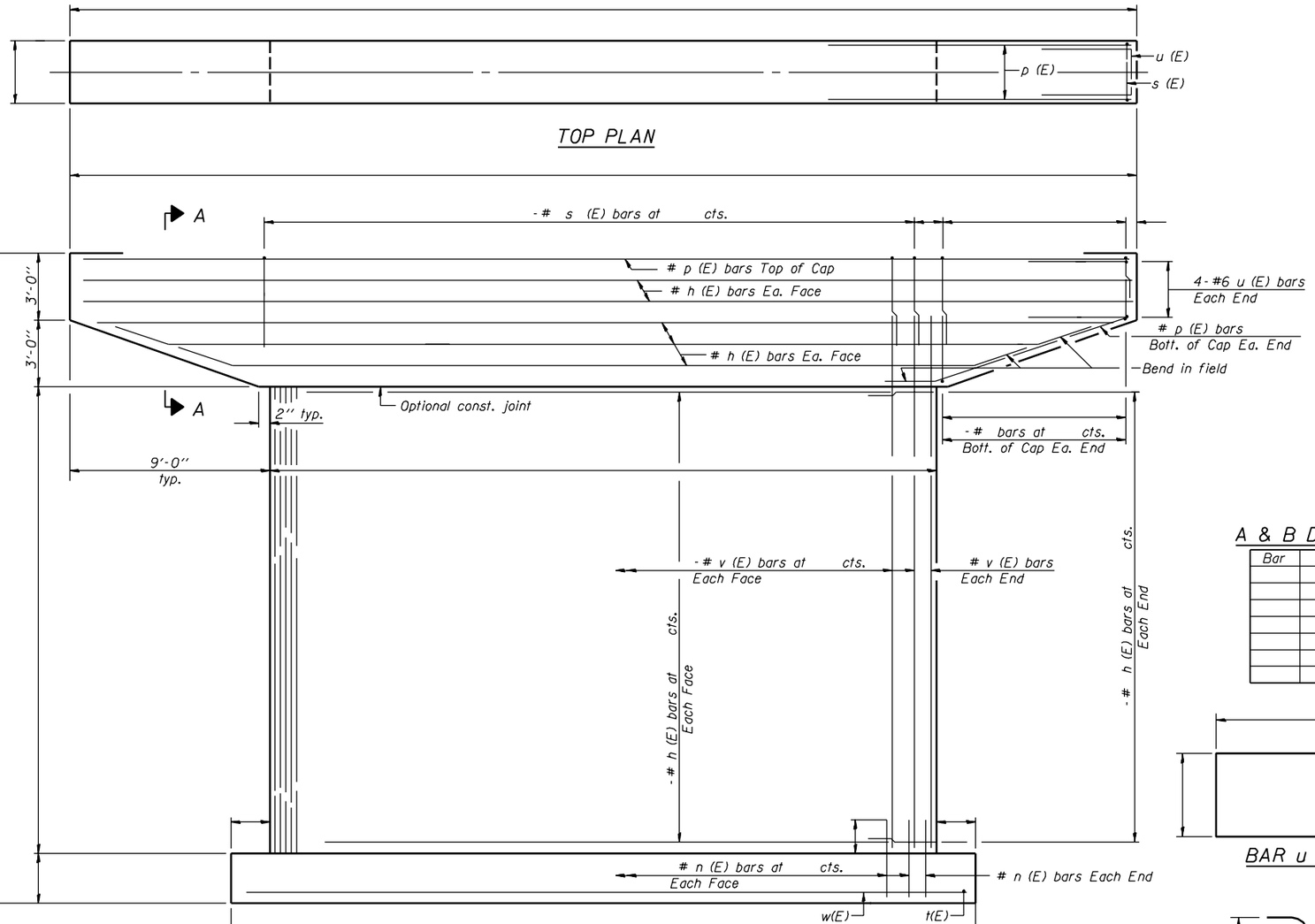

TOP PLAN

ELEVATION
(Looking)

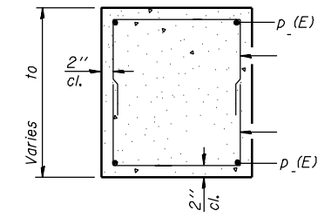

SECTION A-A

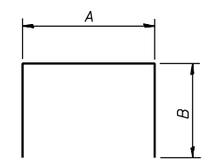

BARS

A & B DIMENSIONS

Bar	A	B

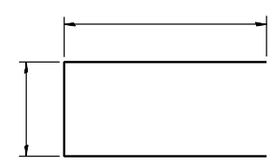

BAR u (E)

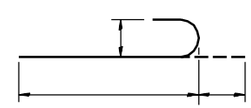

BAR n (E)

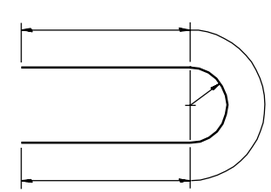

BAR h (E)

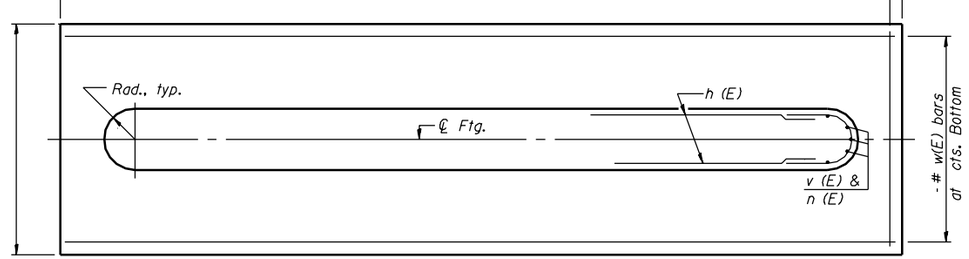

FOOTING PLAN

PIER
BILL OF MATERIAL

Bar	No.	Size	Length	Shape
h (E)		#		
h (E)		#		
h (E)		#		
n (E)		#		
p (E)		#		
p (E)		#		
s (E)		#		
s (E)		#		
s (E)		#		
t (E)		#		
u (E)		#		
v (E)		#		
w (E)		#		
Structure Excavation			Cu. Yd.	
Concrete Structures			Cu. Yd.	
Reinforcement Bars, Epoxy Coated			Pound	

Reinforcement Bars designated (E) shall be epoxy coated.

DESIGNED -	
CHECKED -	
DRAWN -	
CHECKED -	

- 200

EXAMINED
ENGINEER OF BRIDGE DESIGN

PASSED
ENGINEER OF BRIDGES AND STRUCTURES

P-10

10-22-04

STATE OF ILLINOIS
DEPARTMENT OF TRANSPORTATION

ROUTE NO.	SECTION	COUNTY	TOTAL SHEETS	SHEET NO.
-				
-	-	-		
FED. ROAD DIST. NO. 7		ILLINOIS	FED. AID PROJECT-	

SHEET NO. -
- SHEETS

Contract #

Notes:
Space reinforcement in cap to miss anchor bolts.
Pour steps monolithically with cap.

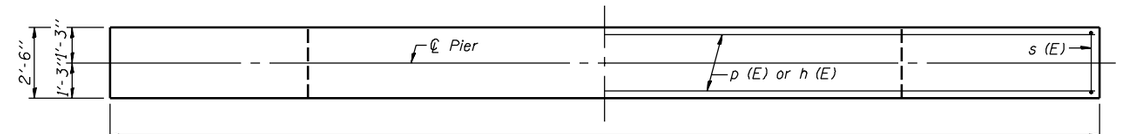

TOP PLAN

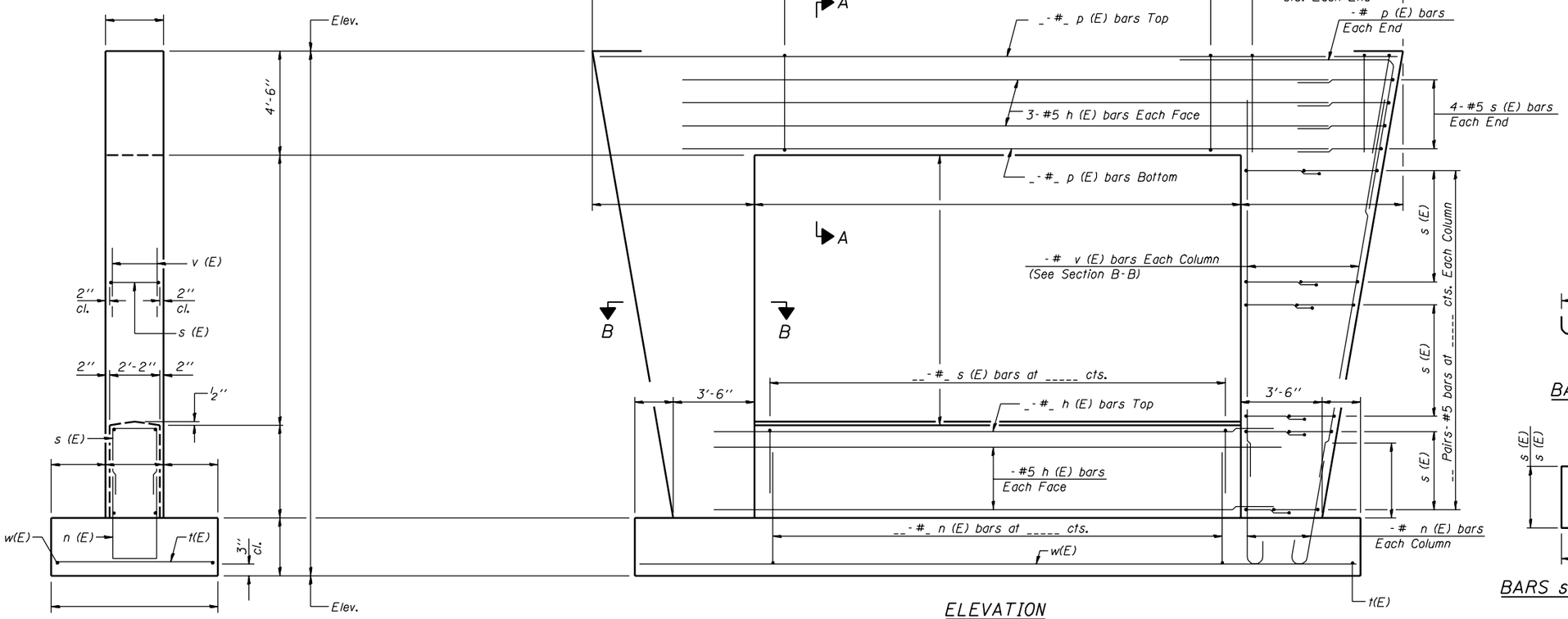

ELEVATION
(Looking)

END VIEW

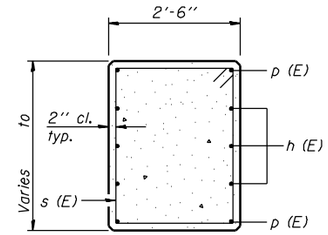

SECTION A-A

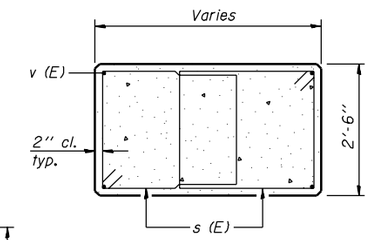

SECTION B-B

BAR n (E)

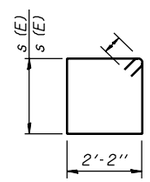

BARS s (E) & s (E)

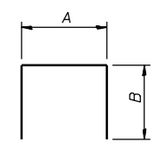

BARS

BILL OF MATERIAL

Bar	No.	Size	Length	Shape
h (E)		#		
h (E)		#		
n(E)		#		
n (E)		#		
p (E)		#		
p (E)		#		
p (E)		#		
s (E)		#		
s (E)		#		
s (E)		#		
s (E)		#		
t (E)		#		
v (E)		#		
w (E)		#		
Structure Excavation			Cu. Yd.	
Concrete Structures			Cu. Yd.	
Reinforcement Bars, Epoxy Coated			Pound	

Reinforcement Bars designated (E) shall be epoxy coated.

PILE DATA

Type:
Capacity:
Est. Length:
No. Req'd:

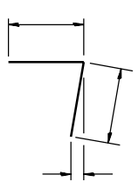

BAR p (E)

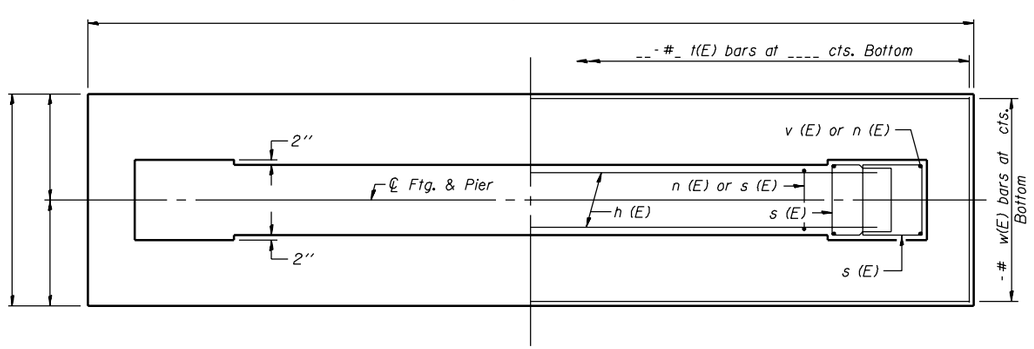

FOOTING PLAN

A & B DIMENSIONS

Bar	A	B

DESIGNED -	
CHECKED -	
DRAWN -	
CHECKED -	

- 200

EXAMINED
ENGINEER OF BRIDGE DESIGN

PASSED
ENGINEER OF BRIDGES AND STRUCTURES

P-11

10-22-04

Notes:
Space reinforcement in cap to miss anchor bolts.
Pour steps monolithically with cap.

STATE OF ILLINOIS
DEPARTMENT OF TRANSPORTATION

ROUTE NO.	SECTION	COUNTY	TOTAL SHEETS	SHEET NO.
-				
-	-	-		
FED. ROAD DIST. NO. 7		ILLINOIS	FED. AID PROJECT-	

SHEET NO. -
- SHEETS

Contract #

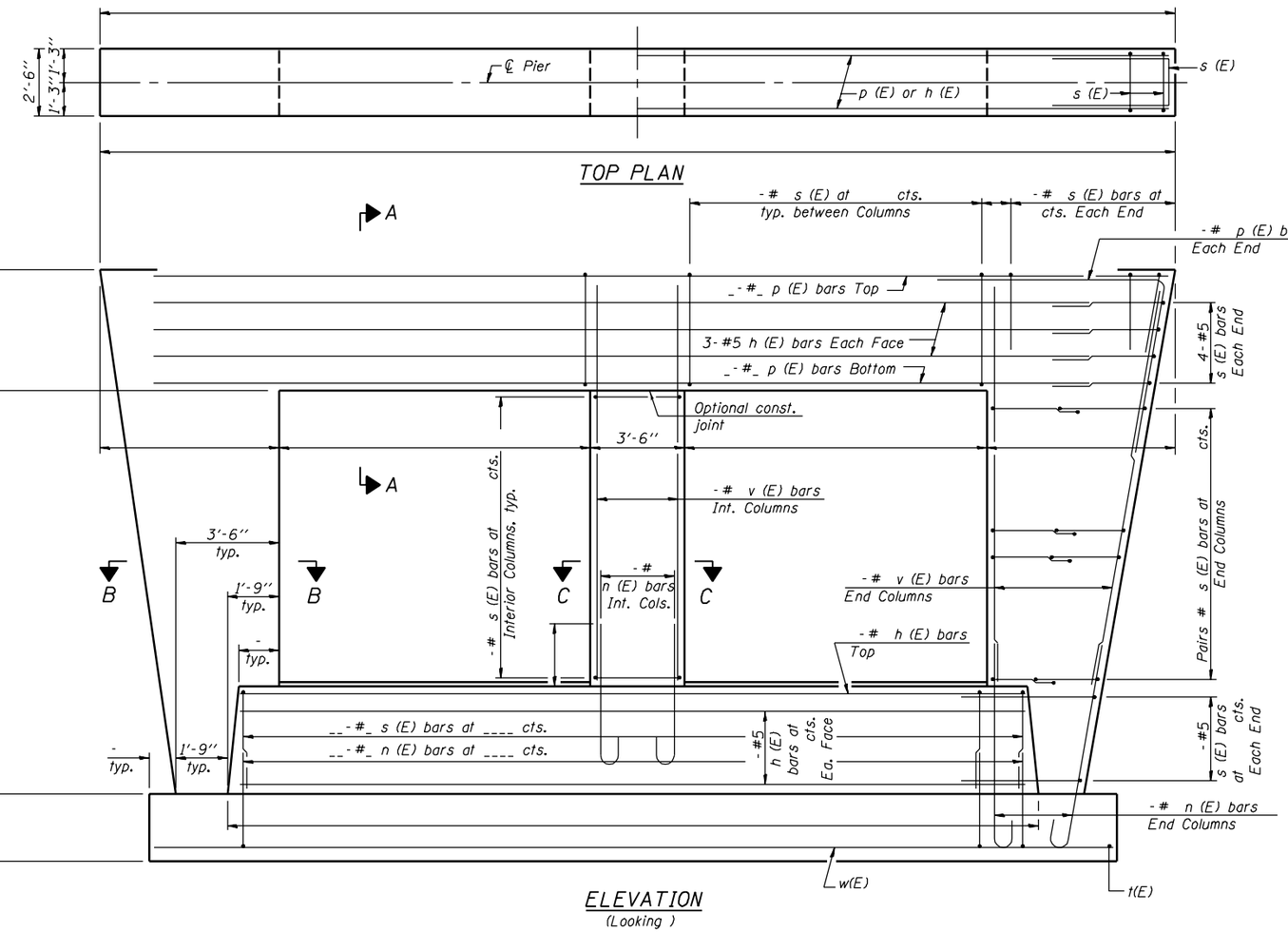

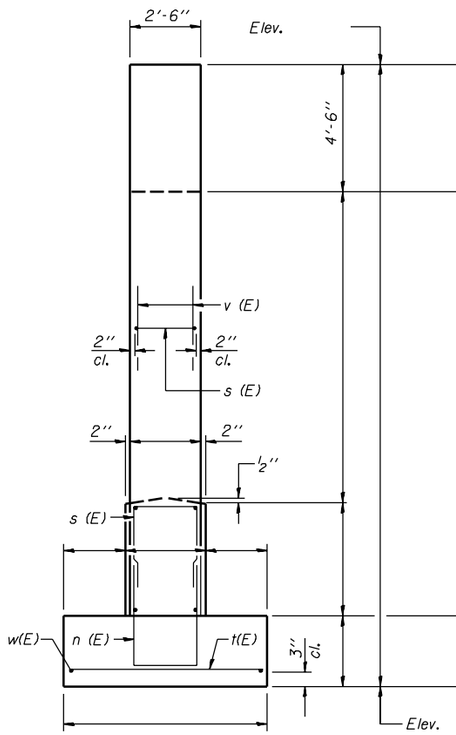

END VIEW

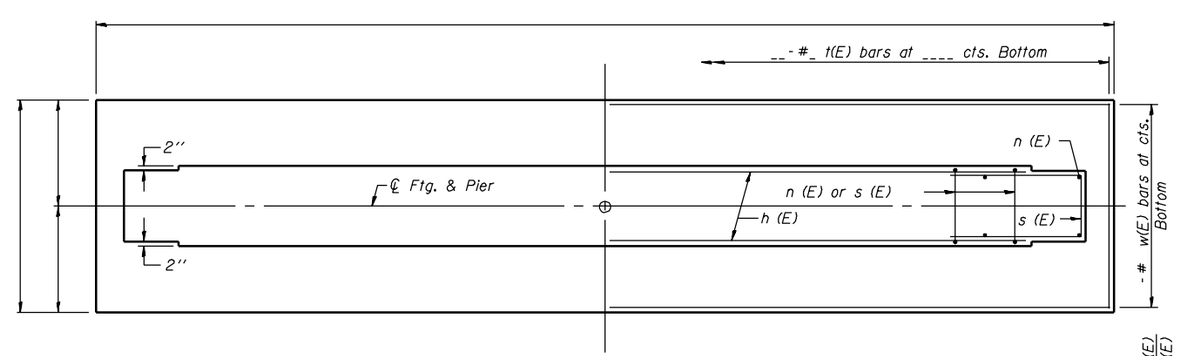

FOOTING PLAN

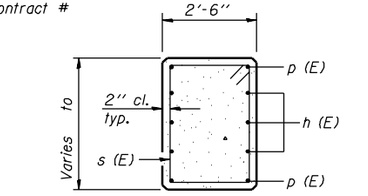

SECTION A-A

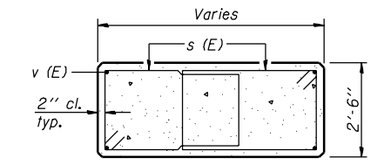

SECTION B-B

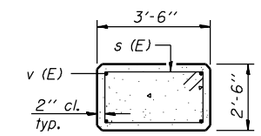

SECTION C-C

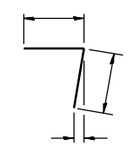

BAR p (E)

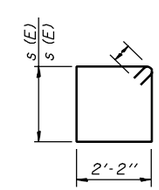

BARS s (E) & s (E)

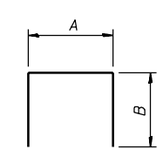

BARS

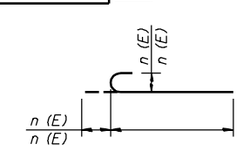

BARS n (E) & n (E)

BILL OF MATERIAL

Bar	No.	Size	Length	Shape
h (E)		#		
h (E)		#		
n (E)		#		
n (E)		#		
n (E)		#		
p (E)		#		
p (E)		#		
p (E)		#		
s (E)		#		
s (E)		#		
s (E)		#		
s (E)		#		
s (E)		#		
t (E)		#		
v (E)		#		
w (E)		#		
Structure Excavation			Cu. Yd.	
Concrete Structures			Cu. Yd.	
Reinforcement Bars, Epoxy Coated			Pound	

Reinforcement Bars designated (E) shall be epoxy coated.

A & B DIMENSIONS

Bar	A	B

PILE DATA

Type:
Capacity:
Est. Length:
No. Req'd:

DESIGNED -	- 200
CHECKED -	EXAMINED
DRAWN -	ENGINEER OF BRIDGE DESIGN
CHECKED -	PASSED
	ENGINEER OF BRIDGES AND STRUCTURES

P-12 10-22-04

Notes:
Space reinforcement in cap to miss anchor bolts.
Pour steps monolithically with cap.

STATE OF ILLINOIS
DEPARTMENT OF TRANSPORTATION

ROUTE NO.	SECTION	COUNTY	TOTAL SHEETS	SHEET NO.
-	-	-		
FED. ROAD DIST. NO. 7		ILLINOIS	FED. AID PROJECT-	

SHEET NO. -
- SHEETS

Contract #

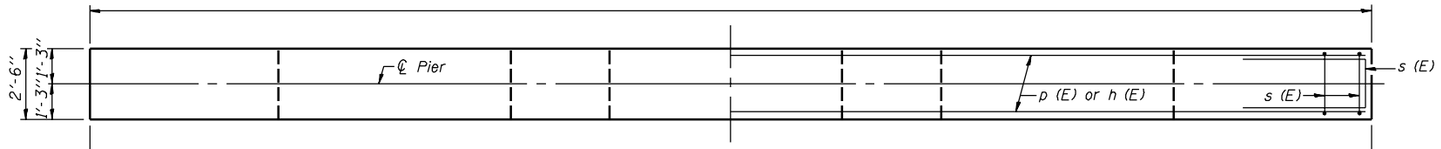

TOP PLAN

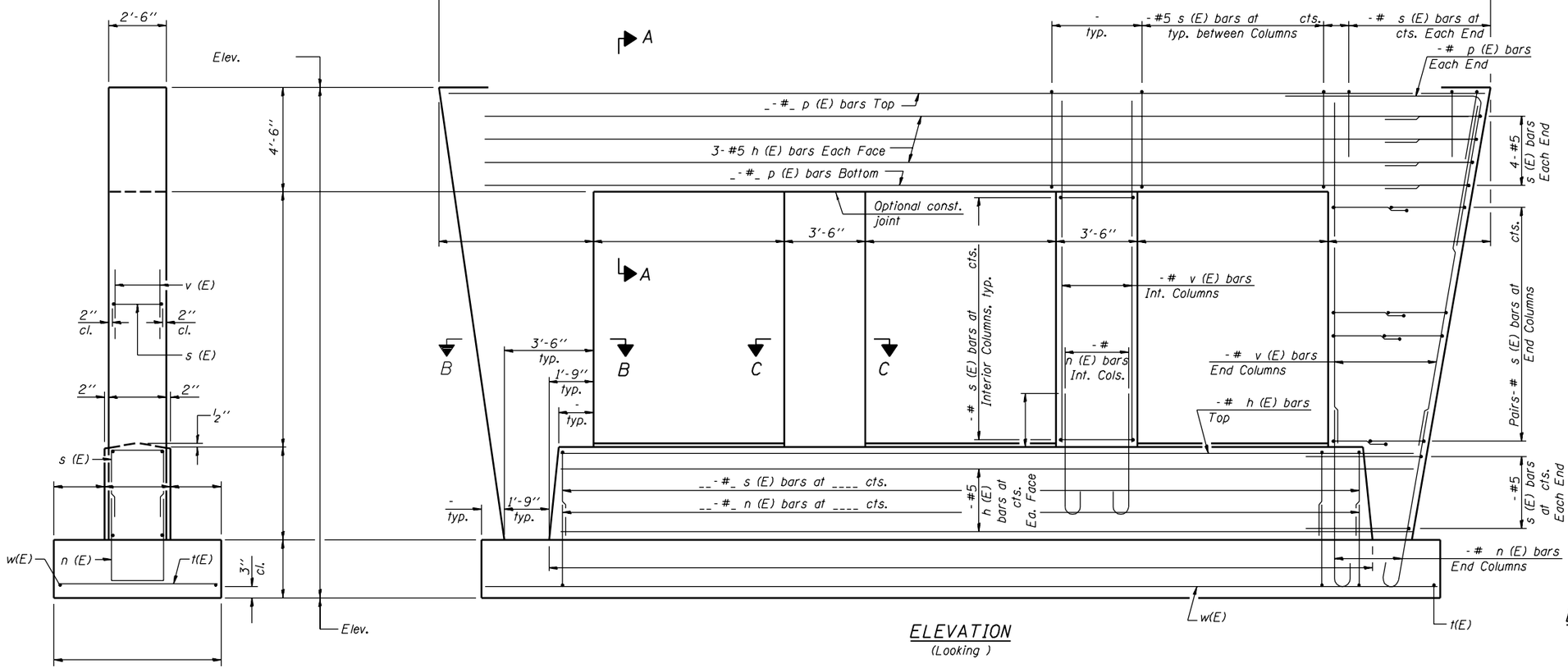

END VIEW

ELEVATION
(Looking)

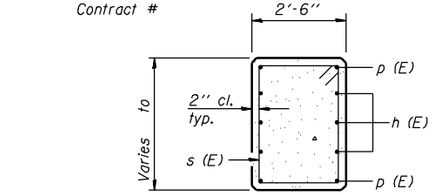

SECTION A-A

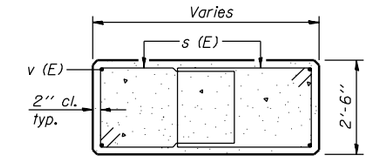

SECTION B-B

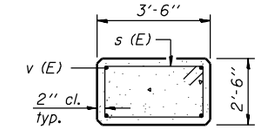

SECTION C-C

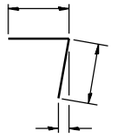

BAR p (E)

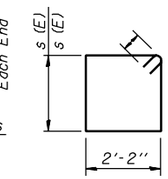

BARS s (E) & s (E)

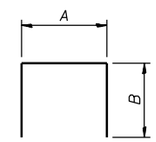

BARS

BILL OF MATERIAL

Bar	No.	Size	Length	Shape
h (E)		#		
h (E)		#		
n (E)		#		
n (E)		#		
n (E)		#		
p (E)		#		
p (E)		#		
p (E)		#		
s (E)		#		
s (E)		#		
s (E)		#		
s (E)		#		
s (E)		#		
t(E)		#		
v (E)		#		
w(E)		#		
Structure Excavation			Cu. Yd.	
Concrete Structures			Cu. Yd.	
Reinforcement Bars, Epoxy Coated			Pound	

Reinforcement Bars designated (E) shall be epoxy coated.

PILE DATA

Type:
Capacity:
Est. Length:
No. Req'd:

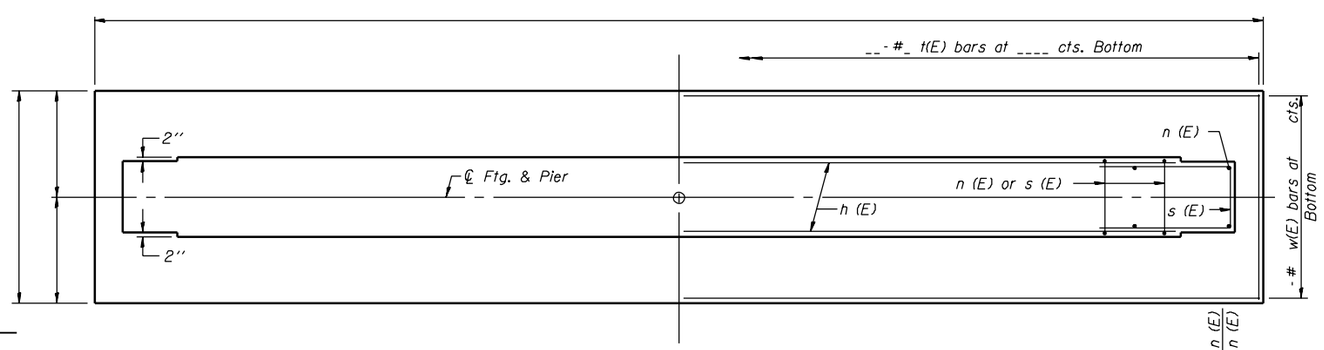

FOOTING PLAN

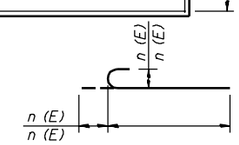

BARS n (E) & n (E)

A & B DIMENSIONS

Bar	A	B

DESIGNED -	
CHECKED -	
DRAWN -	
CHECKED -	

- 200

EXAMINED
ENGINEER OF BRIDGE DESIGN

PASSED
ENGINEER OF BRIDGES AND STRUCTURES

P-13

10-22-04

Notes:
Space reinforcement in cap to miss anchor bolts.
Pour steps monolithically with cap.

STATE OF ILLINOIS
DEPARTMENT OF TRANSPORTATION

ROUTE NO.	SECTION	COUNTY	TOTAL SHEETS	SHEET NO.
-				
-	-	-		
FED. ROAD DIST. NO. 7		ILLINOIS	FED. AID PROJECT-	

SHEET NO. -
- SHEETS

Contract #

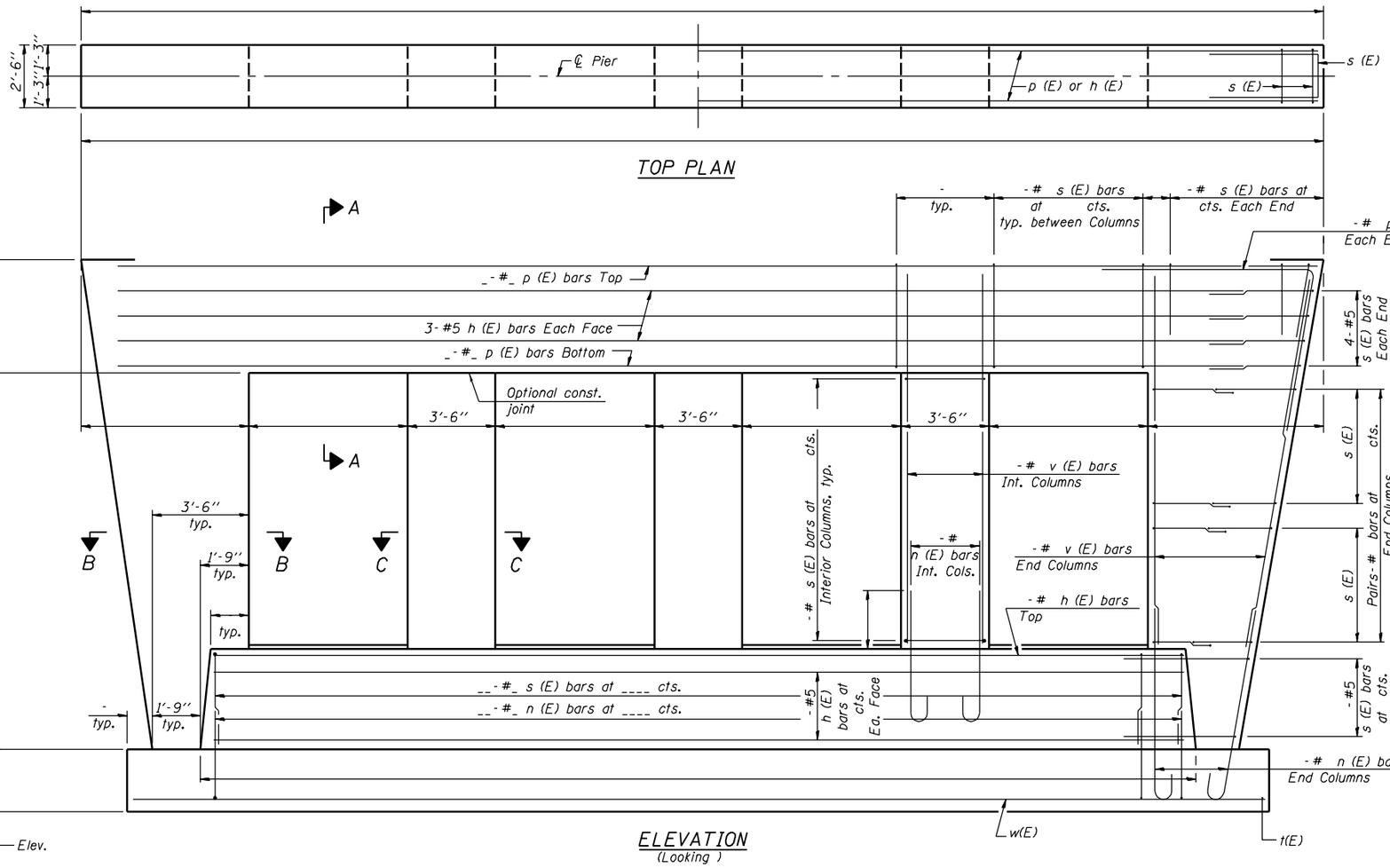

ELEVATION
(Looking)

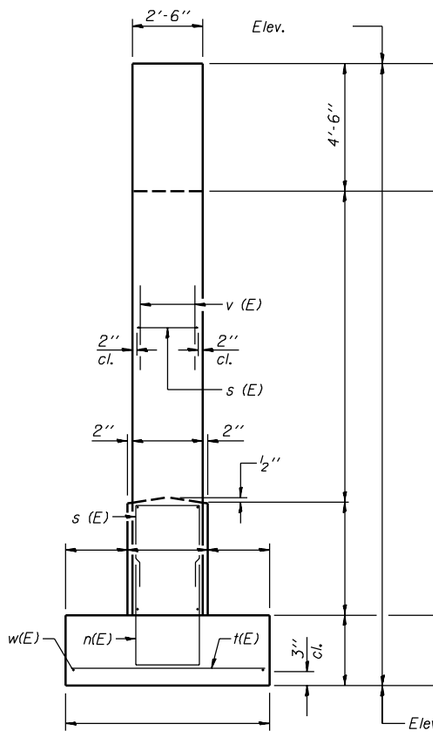

END VIEW

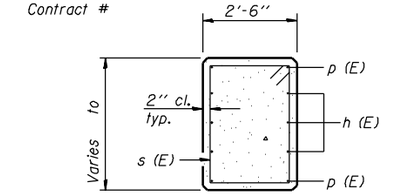

SECTION A-A

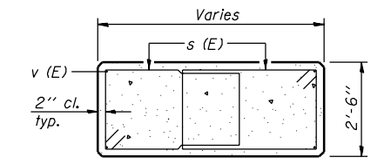

SECTION B-B

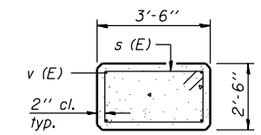

SECTION C-C

BILL OF MATERIAL

Bar	No.	Size	Length	Shape
h (E)		#		
h (E)		#		
n (E)		#		
n (E)		#		
n (E)		#		
p (E)		#		
p (E)		#		
p (E)		#		
s (E)		#		
s (E)		#		
s (E)		#		
s (E)		#		
s (E)		#		
t(E)		#		
v (E)		#		
w(E)		#		
Structure Excavation			Cu. Yd.	
Concrete Structures			Cu. Yd.	
Reinforcement Bars, Epoxy Coated			Pound	

Reinforcement Bars designated (E) shall be epoxy coated.

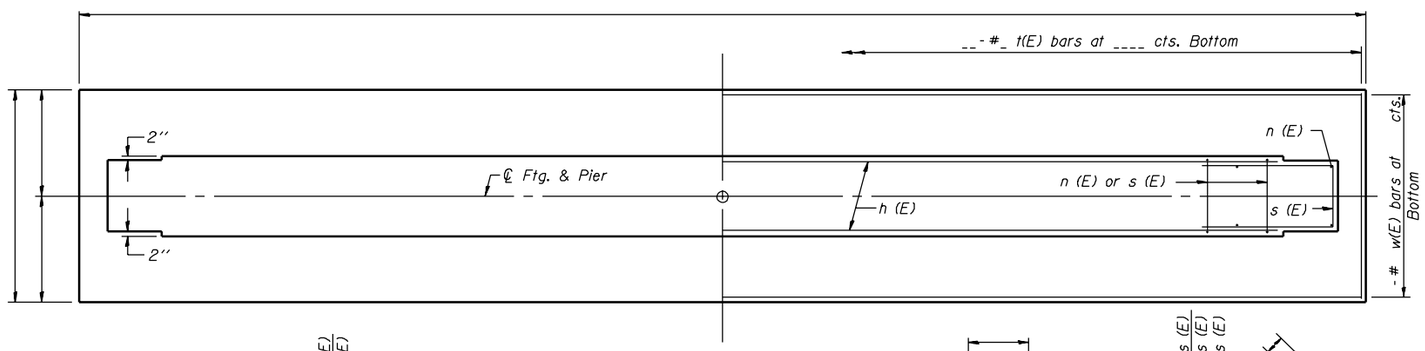

FOOTING PLAN

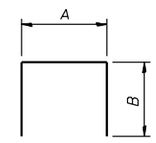

BARS

A & B DIMENSIONS

Bar	A	B

PILE DATA

Type:
Capacity:
Est. Length:
No. Req'd:

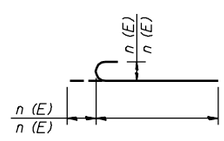

BARS n (E) & n (E)

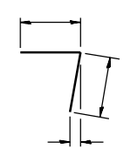

BAR p (E)

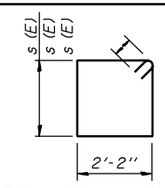

BARS s (E), s (E) & s (E)

DESIGNED -	
CHECKED -	
DRAWN -	
CHECKED -	

- 200
EXAMINED
ENGINEER OF BRIDGE DESIGN
PASSED
ENGINEER OF BRIDGES AND STRUCTURES

P-14 10-22-04

Notes:
Space Reinforcement in cap to miss anchor bolts.
Pour steps monolithically with cap.

STATE OF ILLINOIS
DEPARTMENT OF TRANSPORTATION

ROUTE NO.	SECTION	COUNTY	TOTAL SHEETS	SHEET NO.
-				
-	-	-		
FED. ROAD DIST. NO. 7		ILLINOIS	FED. AID PROJECT-	

SHEET NO. -
- SHEETS

Contract #

PILE DATA

Type:
Capacity:
Est. Length:
No. Req'd:

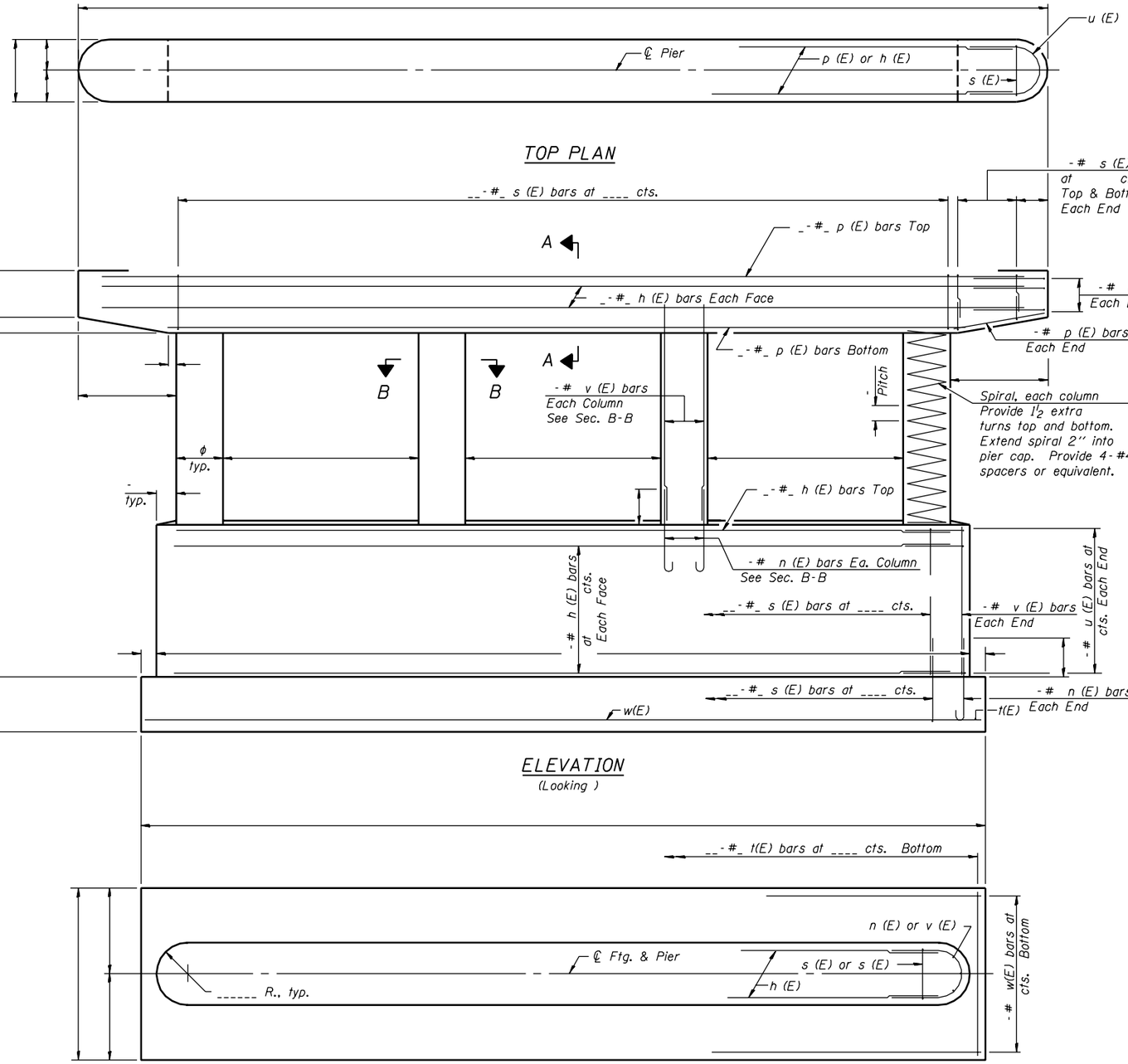

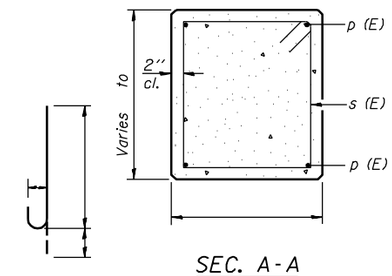

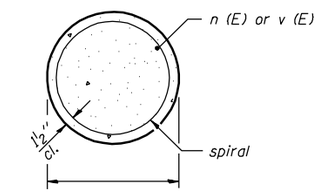

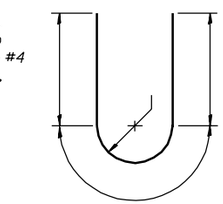

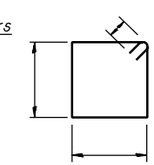

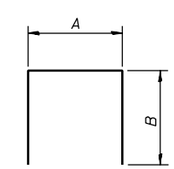

BARS

A & B DIMENSIONS

Bar	A	B

BILL OF MATERIAL

Bar	No.	Size	Length	Shape
h (E)		#		
n (E)		#		
p (E)		#		
p (E)		#		
s (E)		#		
s (E)		#		
sp(E)		#		
t (E)		#		
u (E)		#		
v (E)		#		
w (E)		#		
Concrete Structures			Cu. Yd.	
Reinforcement Bars, Epoxy Coated			Pound	
Structure Excavation			Cu. Yd.	

Reinforcement Bars designated (E) shall be epoxy coated.

DESIGNED -	
CHECKED -	
DRAWN -	
CHECKED -	

- 200

EXAMINED
ENGINEER OF BRIDGE DESIGN

PASSED
ENGINEER OF BRIDGES AND STRUCTURES

P-24

10-22-04

STATE OF ILLINOIS
DEPARTMENT OF TRANSPORTATION

ROUTE NO.	SECTION	COUNTY	TOTAL SHEETS	SHEET NO.
-				
-	-	-		
FED. ROAD DIST. NO. 7		ILLINOIS	FED. AID PROJECT-	

SHEET NO. -
- SHEETS

Contract #

Notes:
Space Reinforcement in cap to miss anchor bolts.
Pour steps monolithically with cap.

PILE DATA

Type:
Capacity:
Est. Length:
No. Req'd:

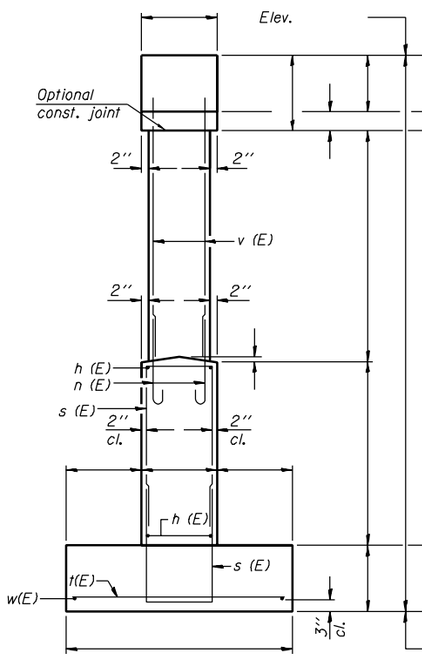

END VIEW

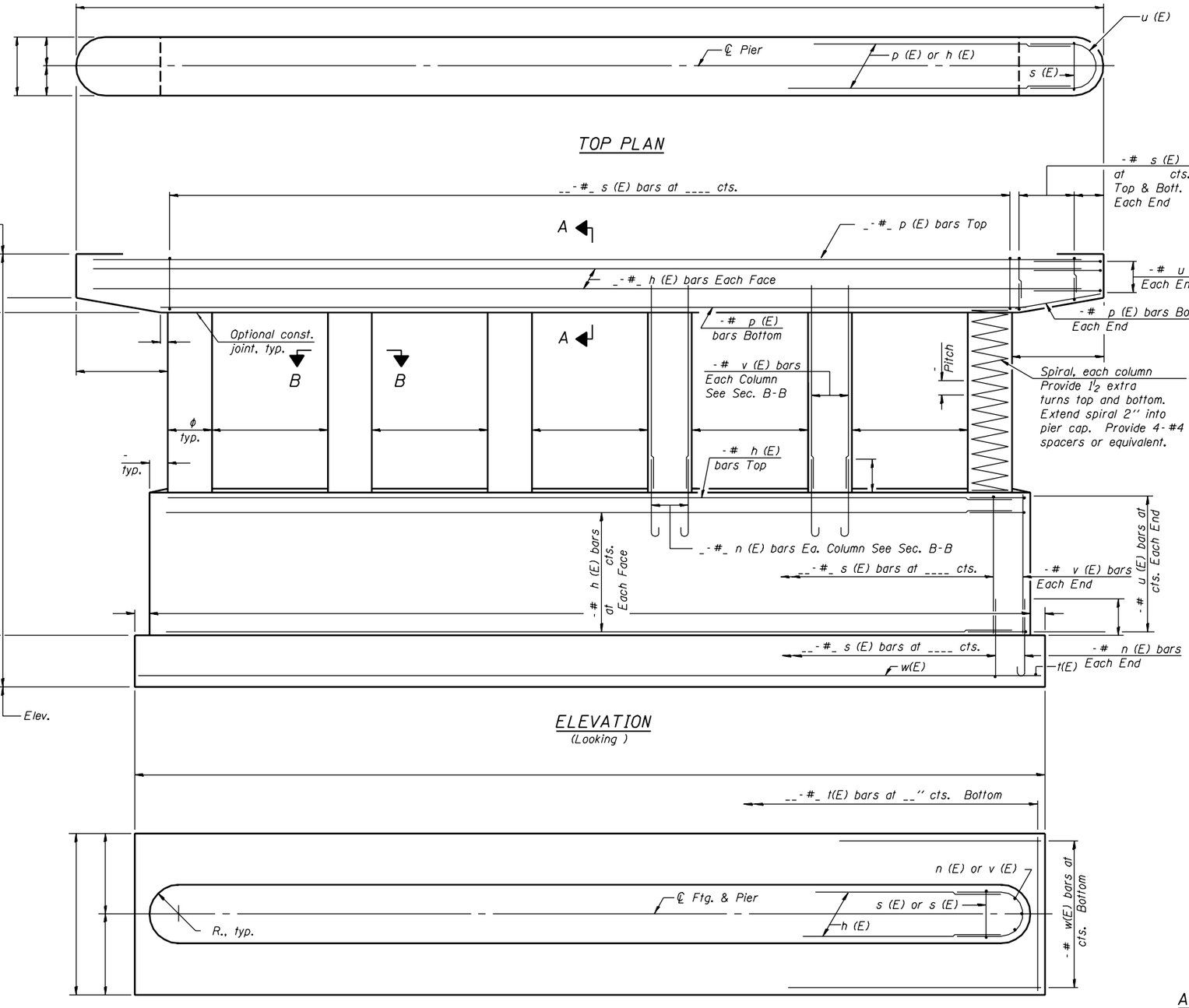

ELEVATION
(Looking)

FOOTING PLAN

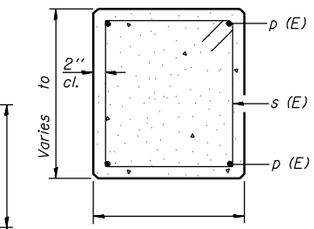

SEC. A-A

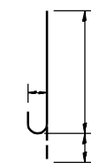

BAR n (E)

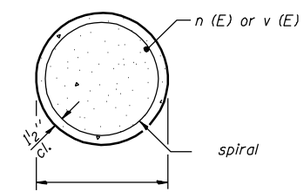

SEC. B-B

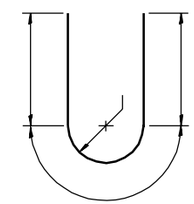

BAR u (E)

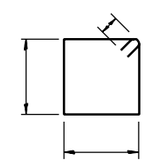

BAR s (E)

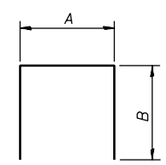

BARS
A & B DIMENSIONS

Bar	A	B

BILL OF MATERIAL

Bar	No.	Size	Length	Shape
h (E)		#		
n (E)		#		
p (E)		#		
p (E)		#		
s (E)		#		
s (E)		#		
sp(E)		#		
t (E)		#		
u (E)		#		
v (E)		#		
w (E)		#		
Concrete Structures			Cu. Yd.	
Reinforcement Bars, Epoxy Coated			Pound	
Structure Excavation			Cu. Yd.	

Reinforcement Bars designated (E) shall be epoxy coated.

DESIGNED -	
CHECKED -	
DRAWN -	
CHECKED -	

- 200
EXAMINED
ENGINEER OF BRIDGE DESIGN
PASSED
ENGINEER OF BRIDGES AND STRUCTURES

P-26

10-22-04

STATE OF ILLINOIS
DEPARTMENT OF TRANSPORTATION

ROUTE NO.	SECTION	COUNTY	TOTAL SHEETS	SHEET NO.
-				
-	-	-		
FED. ROAD DIST. NO. 7		ILLINOIS	FED. AID PROJECT-	

SHEET NO. -
- SHEETS

Contract #

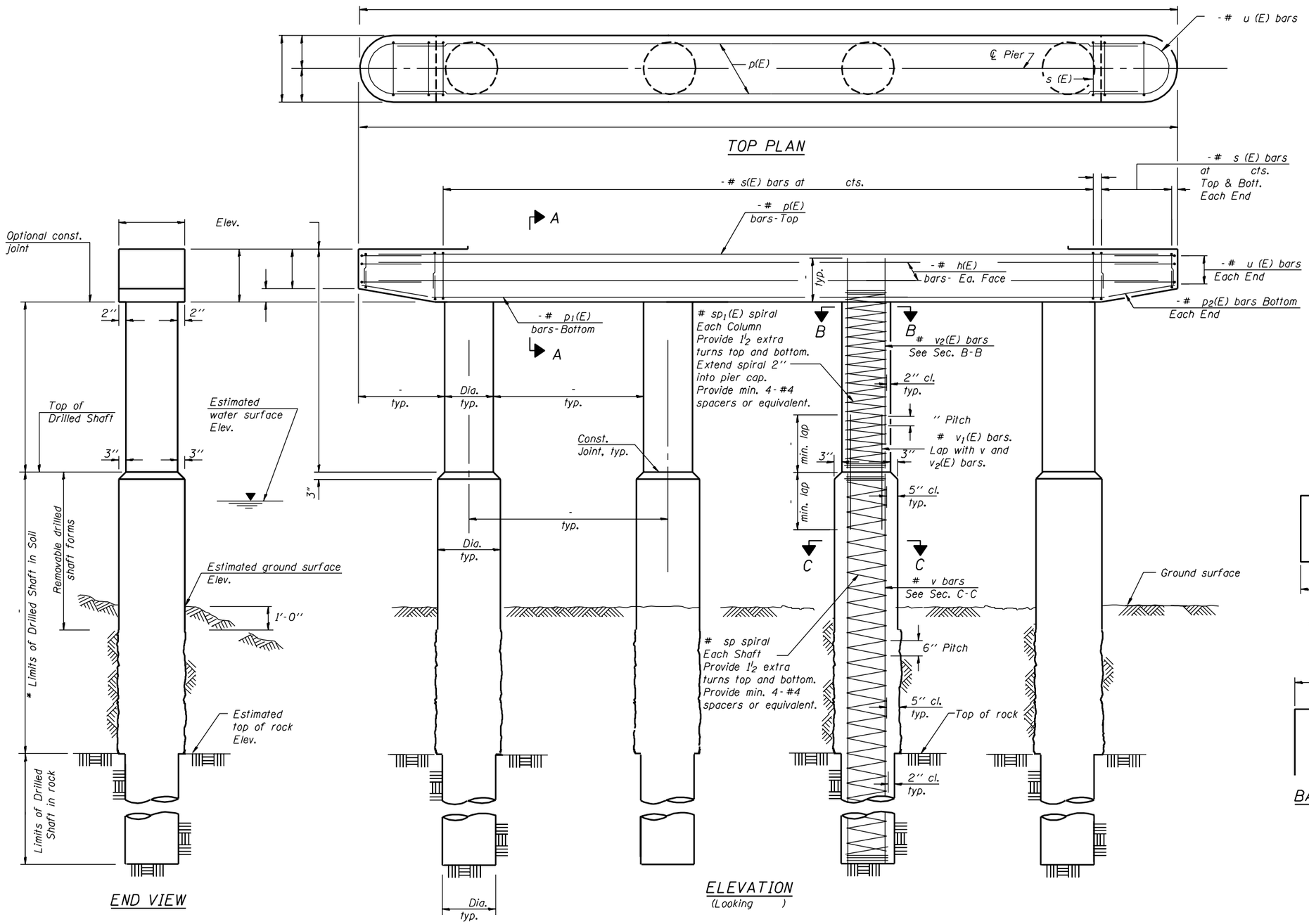

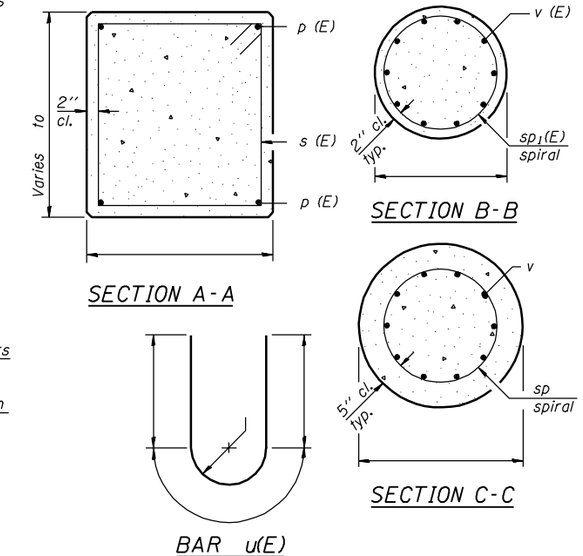

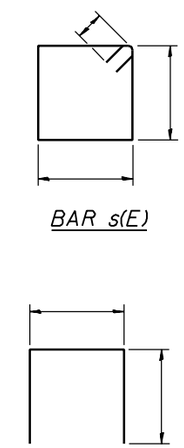

BILL OF MATERIAL

	Bar	No.	Size	Length	Shape
	h(E)		#		
	p(E)		#		
	p1(E)		#		
	p2(E)		#		
	s(E)		#		
	s1(E)		#		
**	sp		#		
**	sp1(E)		#		
	u(E)		#		
	v		#		
	v1(E)		#		
	v2(E)		#		
	Drilled Shaft in Soil '' Dia.			Foot	
	Drilled Shaft in Rock '' Dia.			Foot	
	Concrete Structures			Cu. Yd.	
	Reinforcement Bars, Epoxy Coated			Pound	
	Reinforcement Bars			Pounds	

Reinforcement Bars designated (E) shall be epoxy coated.
Cast steps monolithically with cap.
Space cap reinforcement to miss anchor bolts.
Minimum lap for spirals =
**Length is height of spiral.

* If the prevailing water surface elevation during construction is consistently different than estimated on the plans, the contractor may propose an adjustment to the top of the drilled shaft elevation as part of their installation procedure. The top of all drilled shafts within a substructure unit shall be constructed to the same elevation and extend above the prevailing water surface. The quantities and reinforcement detailing are based on the top of shaft and the estimated elevations shown and may change based on the actual elevations encountered at each shaft and the final top of shaft elevation.

DESIGNED -	
CHECKED -	
DRAWN -	
CHECKED -	

- 200

EXAMINED
ENGINEER OF BRIDGE DESIGN

PASSED
ENGINEER OF BRIDGES AND STRUCTURES

P-DS 10-22-04

STATE OF ILLINOIS
DEPARTMENT OF TRANSPORTATION

ROUTE NO.	SECTION	COUNTY	TOTAL SHEETS	SHEET NO.
-				
-	-	-		
FED. ROAD DIST. NO. 7		ILLINOIS	FED. AID PROJECT-	

SHEET NO. -
- SHEETS

Contract #

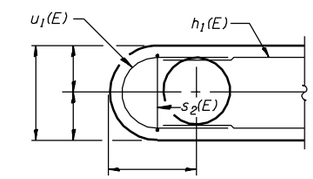

SECTION D-D

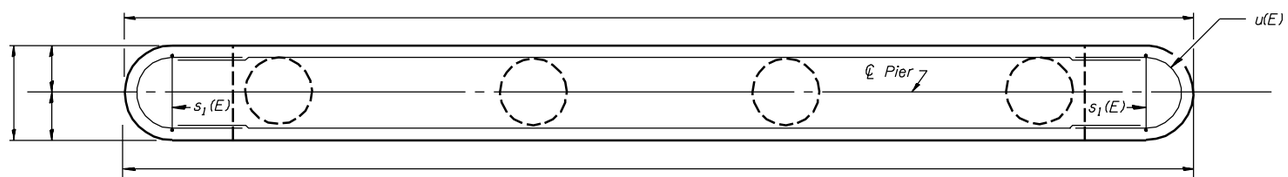

TOP PLAN

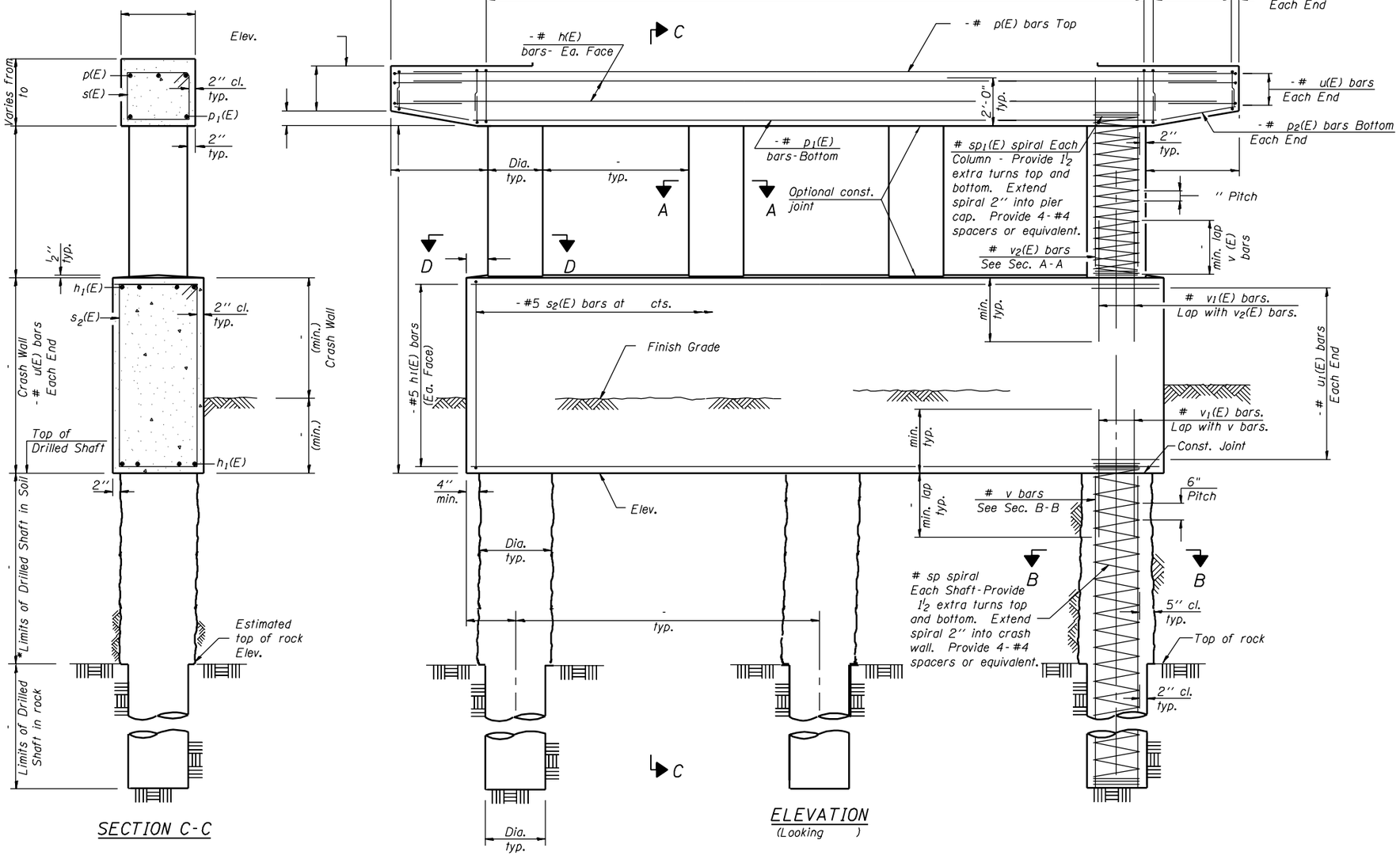

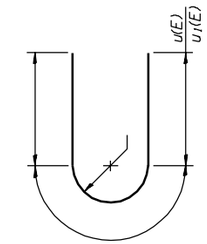

BARS u(E) and $u_1(E)$

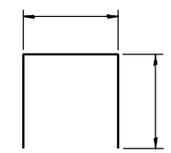

BAR $s_1(E)$

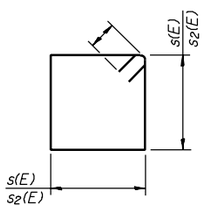

BARS s(E) & $s_2(E)$

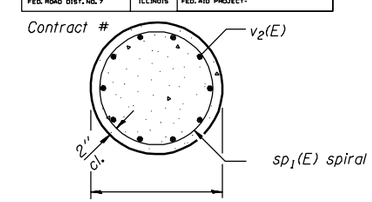

SECTION A-A

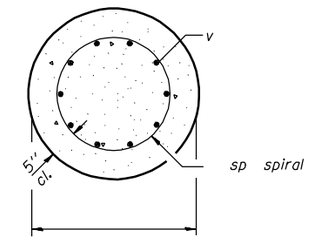

SECTION B-B

BILL OF MATERIAL

	Bar	No.	Size	Length	Shape
	h(E)		#		
	$h_1(E)$		#		
	p(E)		#		
	$p_1(E)$		#		
	$p_2(E)$		#		
	s(E)		#		
	$s_1(E)$		#		
	$s_2(E)$		#5		
**	sp		#		
**	$sp_1(E)$		#		
	u(E)		#		
	$u_1(E)$		#		
	v		#		
	$v_1(E)$		#		
	$v_2(E)$		#		
	Drilled Shaft in Soil '' Dia.			Foot	
	Drilled Shaft in Rock '' Dia.			Foot	
	Concrete Structures			Cu. Yd.	
	Reinforcement Bars, Epoxy Coated			Pound	
	Reinforcement Bars			Pound	

Reinforcement Bars designated (E) shall be epoxy coated.
Cast steps monolithically with cap.
Space cap reinforcement to miss anchor bolts.
Minimum lap for spirals =
** Length is height of spiral.

* The quantities and reinforcement detailing are based on the top of shaft and the estimated top of rock elevations shown and may change based on the actual top of rock encountered at each shaft and the final top of shaft elevation.

DESIGNED -	- 200
CHECKED -	EXAMINED
DRAWN -	PASSED ENGINEER OF BRIDGE DESIGN
CHECKED -	ENGINEER OF BRIDGES AND STRUCTURES

P-DSCW 10-22-04

*** Contractor is responsible for determining the casing thickness and the actual tip elevation to be used (see Special Provisions).

Pay limits for the Permanent Casing are based on the minimum length shown.

STATE OF ILLINOIS
DEPARTMENT OF TRANSPORTATION

ROUTE NO.	SECTION	COUNTY	TOTAL SHEETS	SHEET NO.
-				
-	-	-		
FED. ROAD DIST. NO. 7		ILLINOIS	FED. AID PROJECT-	

SHEET NO. -
- SHEETS

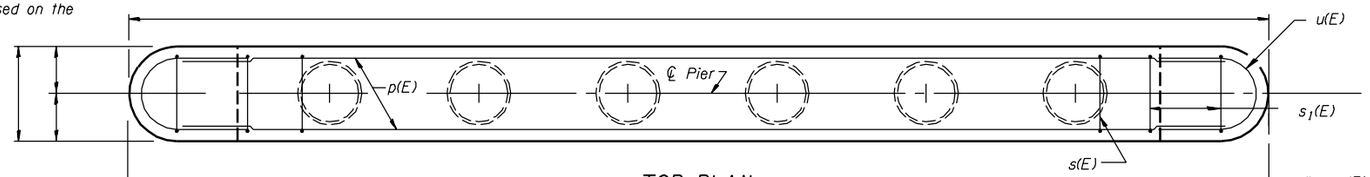

TOP PLAN

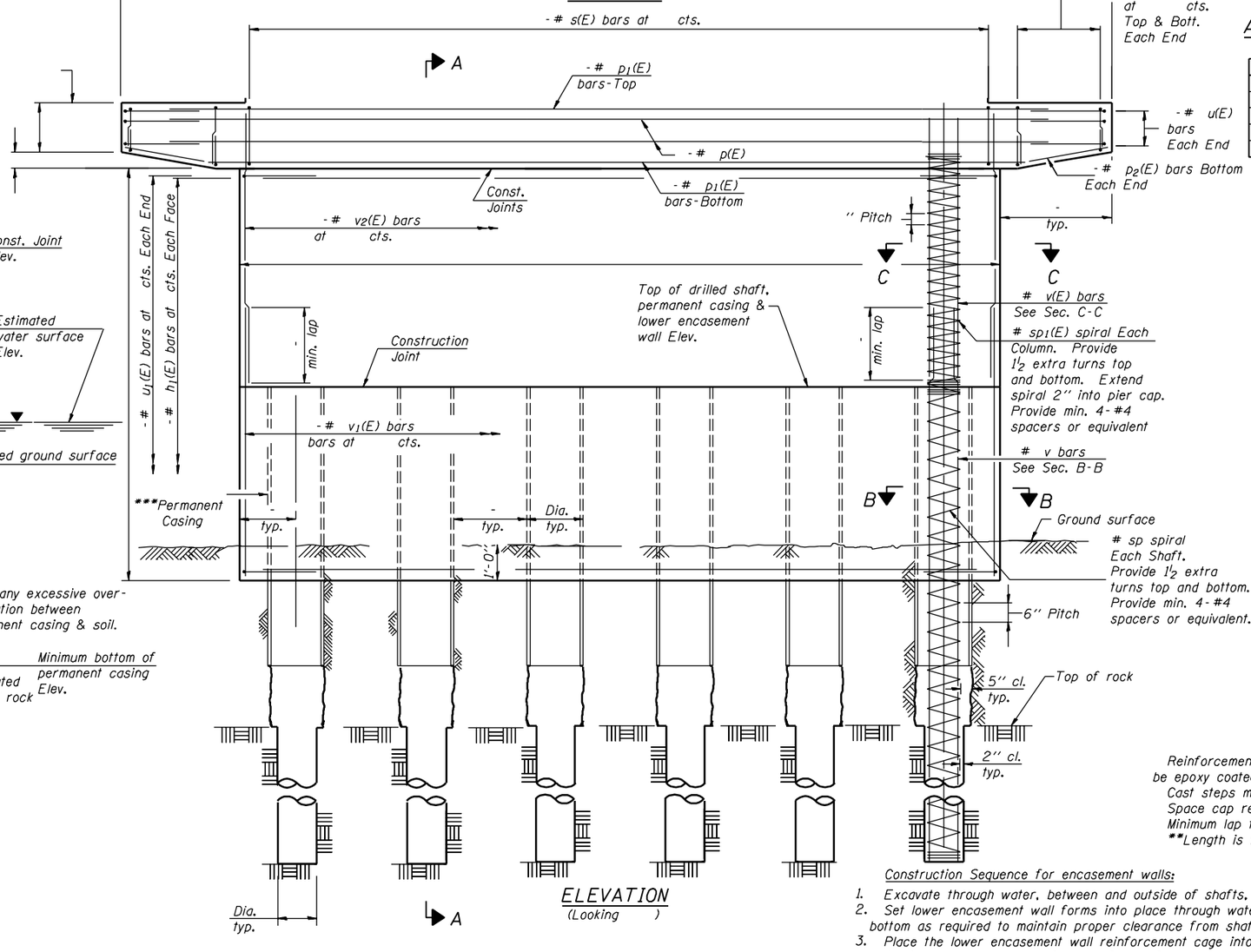

ELEVATION
(Looking)

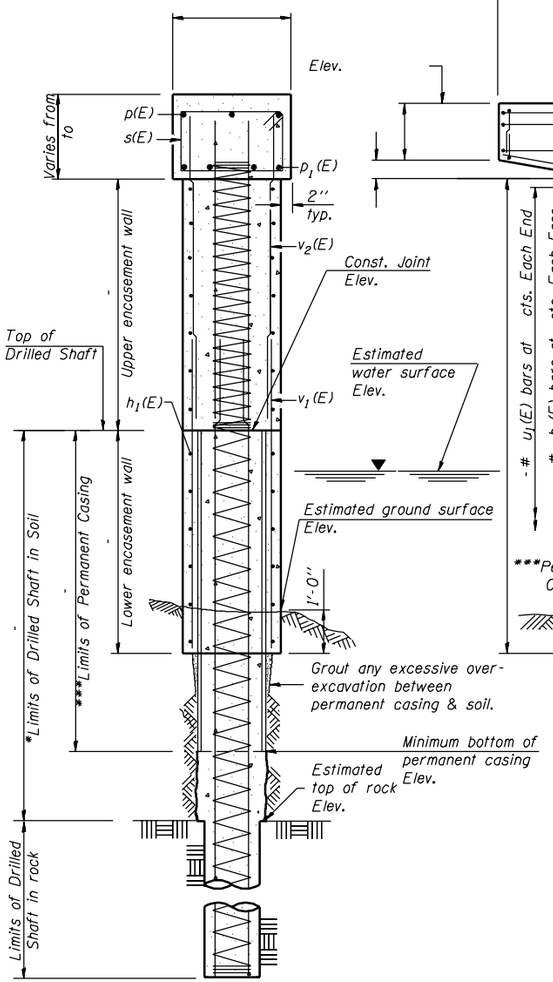

SECTION A-A

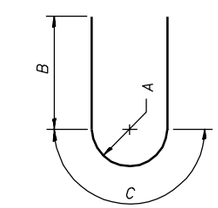

BAR u(E) or u1(E)

A, B & C DIMENSIONS

Bar	A	B	C
u(E)			
u1(E)			

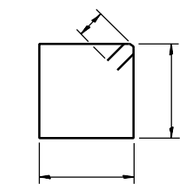

BAR s(E)

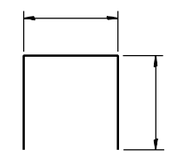

BARS s1(E)

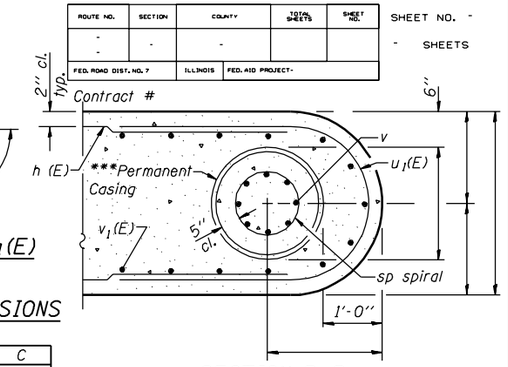

SECTION B-B

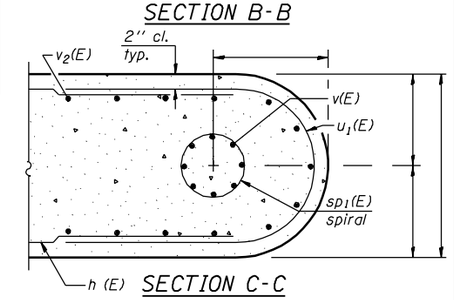

SECTION C-C

BILL OF MATERIAL

	Bar	No.	Size	Length	Shape
	h(E)		#		
	h1(E)		#		
	p(E)		#		
	p1(E)		#		
	p2(E)		#		
	s(E)		#		
	s1(E)		#		
**	sp		#		
**	sp1(E)		#		
	u(E)		#		
	u1(E)		#		
	v		#		
	v(E)		#		
	v1(E)		#		
	v2(E)		#		
	Underwater Structure Excavation Protection, Location			Each	
	Drilled Shaft in Soil '' Dia.			Foot	
	Drilled Shaft in Rock '' Dia.			Foot	
	Concrete Structures			Cu. Yd.	
	Reinforcement Bars, Epoxy Coated			Pound	
	Reinforcement Bars			Pound	
	Permanent Casing			Foot	

Reinforcement Bars designated (E) shall be epoxy coated.

Cast steps monolithically with cap.

Space cap reinforcement to miss anchor bolts.

Minimum lap for spirals = 1½ turns.

**Length is height of spiral.

Construction Sequence for encasement walls:

1. Excavate through water, between and outside of shafts, to base of lower encasement wall.
2. Set lower encasement wall forms into place through water and secure at top and bottom as required to maintain proper clearance from shaft.
3. Place the lower encasement wall reinforcement cage into forms using spacers to maintain proper clearances from shaft and forms.
4. If the forms can be sealed against the streambed to allow dewatering, the reinforcement and the concrete placement may be completed in the dry. Alternatively, the rebar cage can be lowered into position through water and the concrete discharged at the base of the excavation through a tremie pipe or pump hose, displacing water, sediment, and tainted concrete out the top of the forms.
5. Prepare construction joint at top of drilled shafts and lower encasement wall.
6. Splice upper encasement wall reinforcement and cage length to lower encasement and shaft reinforcement, form and pour upper encasement wall.

* If the prevailing water surface elevation during construction is consistently different than estimated on the plans, the contractor may propose an adjustment to the top of the drilled shaft elevation as part of their installation procedure. The top of all drilled shafts within a substructure unit shall be constructed to the same elevation and extend above the prevailing water surface. The quantities and reinforcement detailing are based on the top of shaft and the estimated elevations shown and may change based on the actual elevations encountered at each shaft and the final top of shaft elevation.

DESIGNED -	
CHECKED -	
DRAWN -	
CHECKED -	

- 200

EXAMINED

ENGINEER OF BRIDGE DESIGN

PASSED

ENGINEER OF BRIDGES AND STRUCTURES

P-DSSW 10-22-04

STATE OF ILLINOIS
DEPARTMENT OF TRANSPORTATION

ROUTE NO.	SECTION	COUNTY	TOTAL SHEETS	SHEET NO.
-				
-	-	-		
FED. ROAD DIST. NO. 7		ILLINOIS	FED. AID PROJECT-	

SHEET NO. -
- SHEETS

Contract #

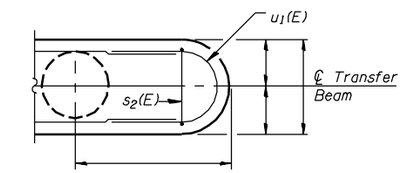

SECTION D-D

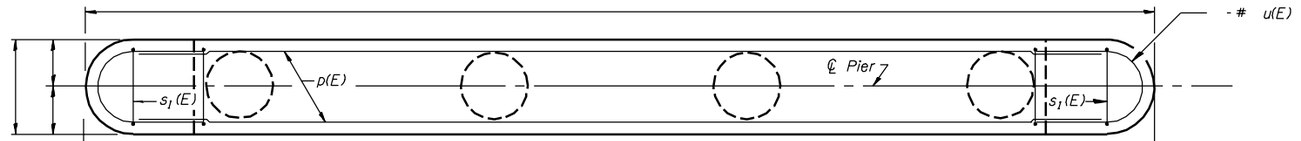

TOP PLAN

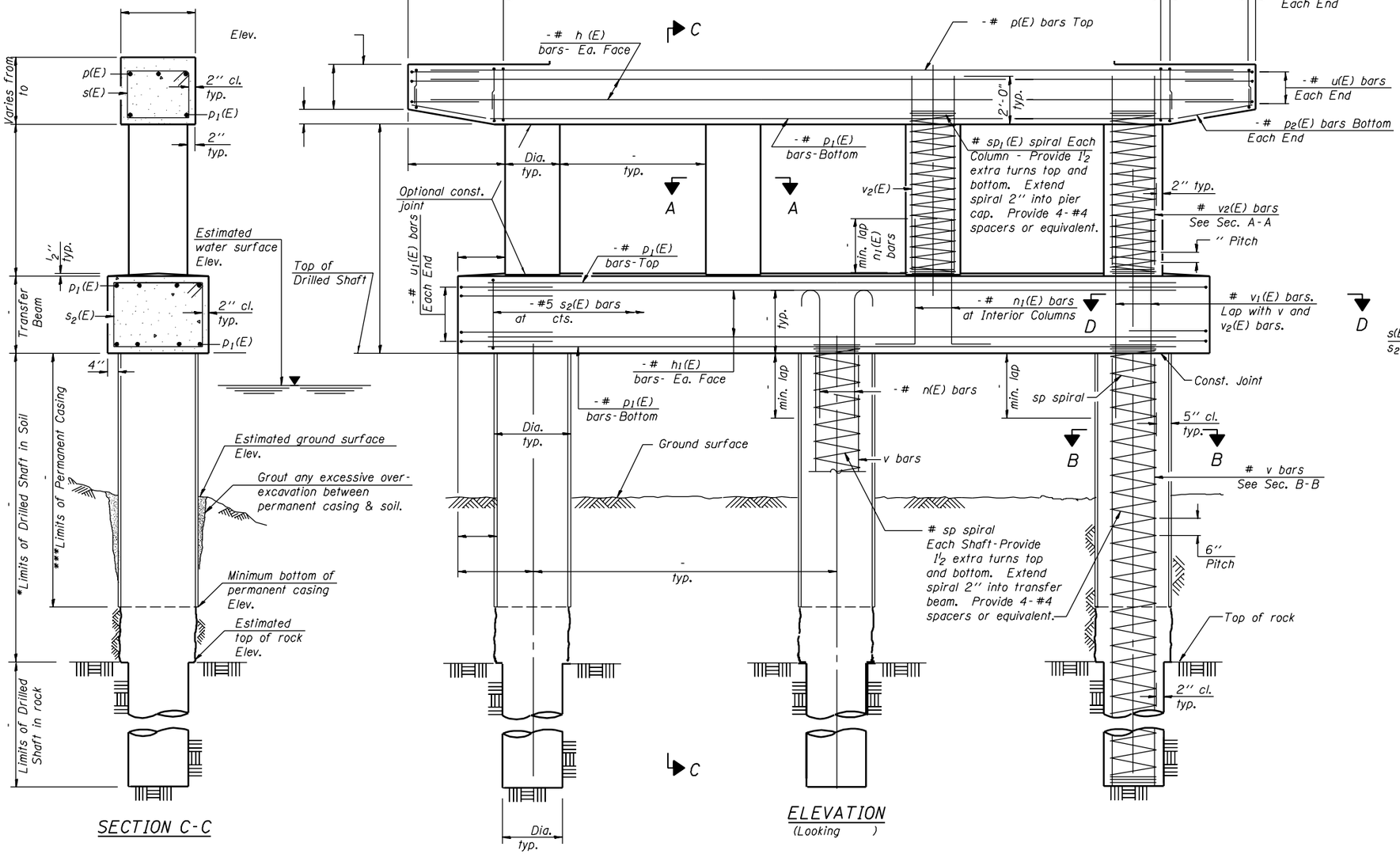

SECTION C-C

ELEVATION
(Looking)

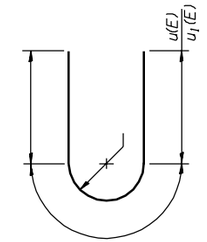

BARS u(E) and u1(E)

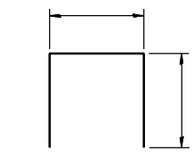

BAR s1(E)

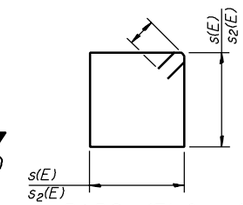

BARS s(E) & s2(E)

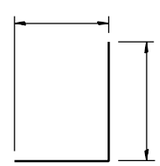

BAR n1(E)

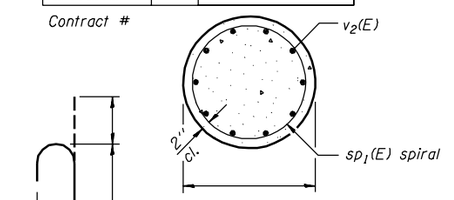

SECTION A-A

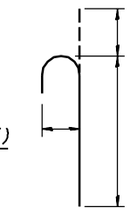

BAR n(E)

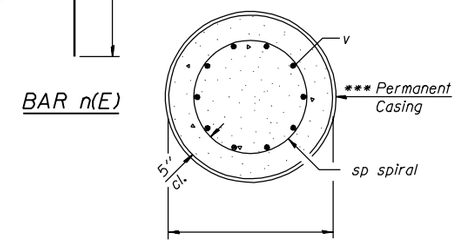

SECTION B-B

BILL OF MATERIAL

Bar	No.	Size	Length	Shape
h(E)		#		
h1(E)		#		
n(E)		#		
n1(E)		#		
p(E)		#		
p1(E)		#		
p2(E)		#		
s(E)		#		
s1(E)		#		
s2(E)		#		
** sp		#		
** sp1(E)		#		
u(E)		#		
u1(E)		#		
v		#		
v1(E)		#		
v2(E)		#		
Permanent Casing			Foot	
Drilled Shaft in Soil '' Dia.			Foot	
Drilled Shaft in Rock '' Dia.			Foot	
Concrete Structures			Cu. Yd.	
Reinforcement Bars, Epoxy Coated			Pound	
Reinforcement Bars			Pound	

Reinforcement Bars designated (E) shall be epoxy coated.
Cast steps monolithically with cap.
Space cap reinforcement to miss anchor bolts.
Minimum lap for spirals =
**Length is height of spiral.

DESIGNED -	
CHECKED -	
DRAWN -	
CHECKED -	

- 200

EXAMINED
ENGINEER OF BRIDGE DESIGN

PASSED
ENGINEER OF BRIDGES AND STRUCTURES

P-DSTB 10-22-04

* If the prevailing water surface elevation during construction is consistently different than estimated on the plans, the contractor may propose an adjustment to the top of the drilled shaft elevation as part of their installation procedure. The top of all drilled shafts within a substructure unit shall be constructed to the same elevation and extend above the prevailing water surface. The quantities and reinforcement detailing are based on the top of shaft and the estimated elevations shown and may change based on the actual elevations encountered at each shaft and the final top of shaft elevation.

*** Contractor is responsible for determining the casing thickness and the actual tip elevation to be used (see Special Provisions). Pay limits for the Permanent Casing shall be based on the minimum length shown.

STATE OF ILLINOIS
DEPARTMENT OF TRANSPORTATION

ROUTE NO.	SECTION	COUNTY	TOTAL SHEETS	SHEET NO.
-				
-	-	-		
FED. ROAD DIST. NO. 7		ILLINOIS	FED. AID PROJECT-	

SHEET NO. -
- SHEETS

Contract #

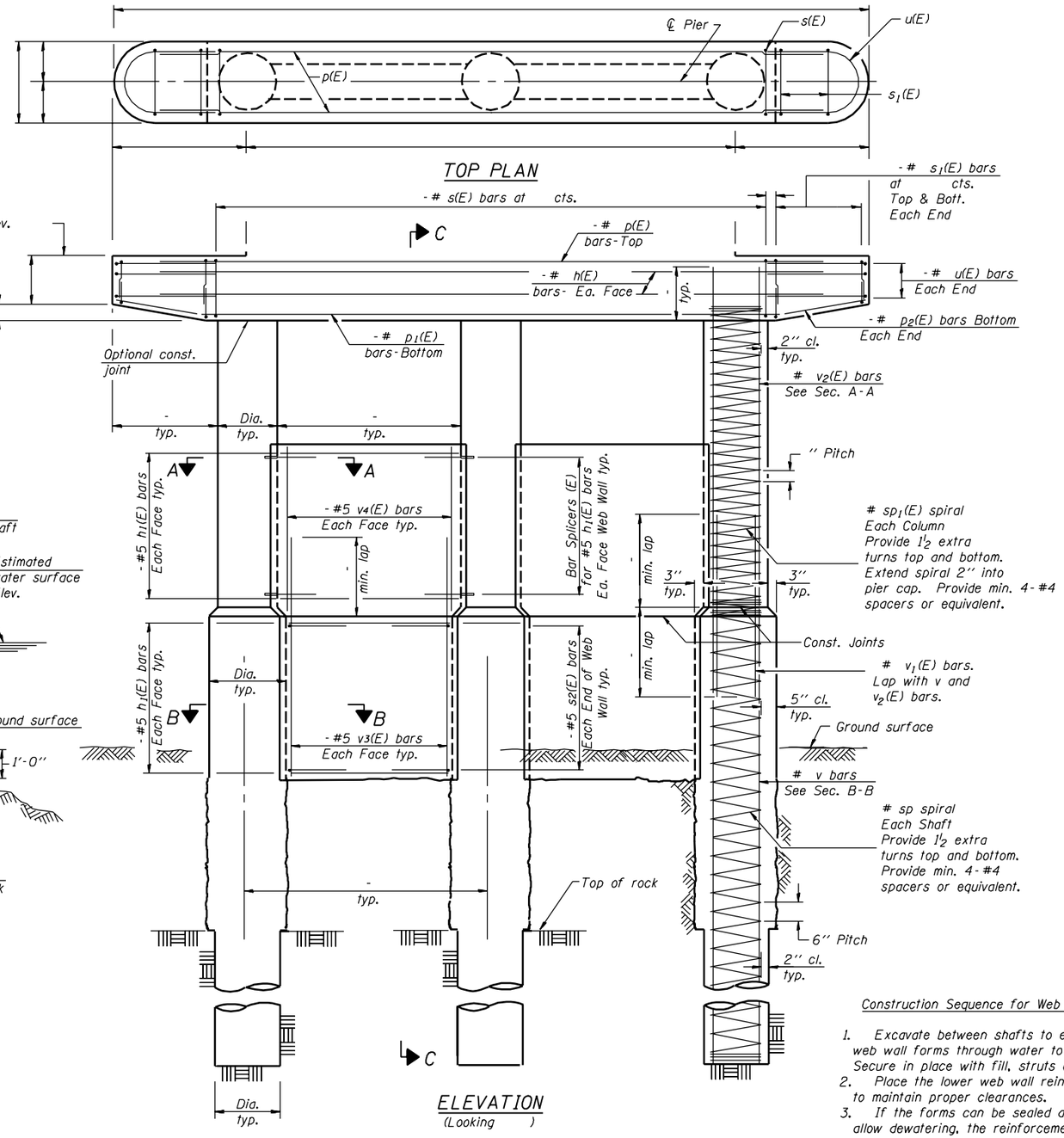

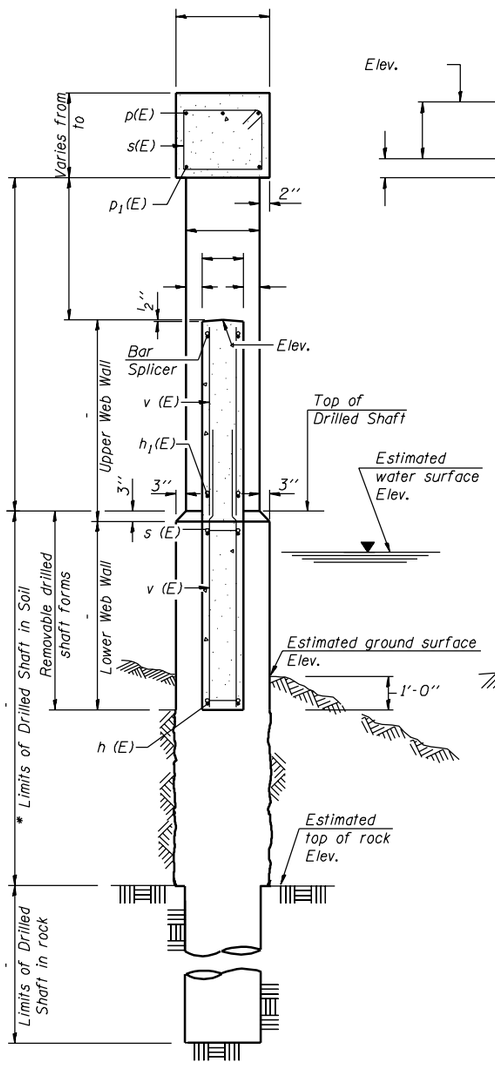

SECTION C-C

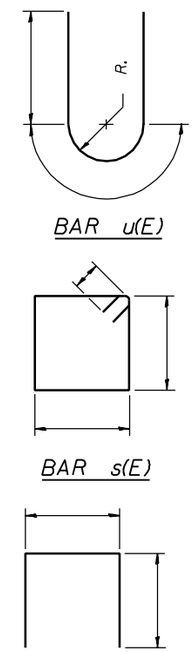

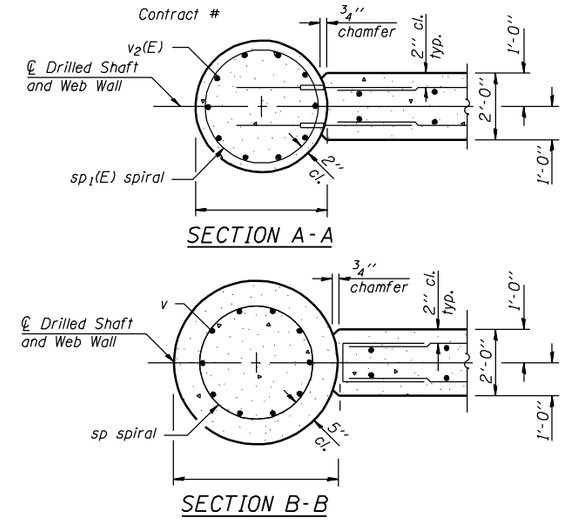

BILL OF MATERIAL

Bar	No.	Size	Length	Shape
h(E)		#		
h1(E)		#		
p(E)		#		
p1(E)		#		
p2(E)		#		
s(E)		#		
s1(E)		#		
s2(E)		#		
** sp		#		
** sp1(E)		#		
u(E)		#		
v		#		
v1(E)		#		
v2(E)		#		
v3(E)		#		
v4(E)		#		
Underwater Structure Excavation Protection Location			Each	
Drilled Shaft in Soil '' Dia.			Foot	
Drilled Shaft in Rock '' Dia.			Foot	
Concrete Structures			Cu. Yd.	
Reinforcement Bars, Epoxy Coated			Pound	
Reinforcement Bars			Pound	
Bar Splicers			Each	

Reinforcement Bars designated (E) shall be epoxy coated.
Cast steps monolithically with cap.
Space cap reinforcement to miss anchor bolts.
Minimum lap for spirals =
**Length is height of spiral.

Construction Sequence for Web Wall:

1. Excavate between shafts to elevation of web wall base and set lower web wall forms through water to bear on the circular edge of drilled shafts. Secure in place with fill, struts or tie forms together as required.
2. Place the lower web wall reinforcement cage into the forms using spacers to maintain proper clearances.
3. If the forms can be sealed against the shafts and streambed to allow dewatering, the reinforcement and the concrete placement may be completed in the dry. Alternatively, the rebar cage can be lowered into position through water and the concrete discharged at the base of the excavation through a tremie pipe or pump hose, displacing water, sediment, and tainted concrete out the top of the forms.
4. Construct Columns.
5. Construct upper web walls.

* If the prevailing water surface elevation during construction is consistently different than estimated on the plans, the contractor may propose an adjustment to the top of the drilled shaft elevation as part of their installation procedure. The top of all drilled shafts within a substructure unit shall be constructed to the same elevation and extend above the prevailing water surface. The quantities and reinforcement detailing are based on the top of shaft and the estimated elevations shown and may change based on the actual elevations encountered at each shaft and the final top of shaft elevation.

DESIGNED -	- 200
CHECKED -	EXAMINED
DRAWN -	PASSED ENGINEER OF BRIDGE DESIGN
CHECKED -	ENGINEER OF BRIDGES AND STRUCTURES

P-DSWW 10-22-04

Notes:
Space reinforcement in cap to miss anchor bolts.
Pour steps monolithically with cap.

STATE OF ILLINOIS
DEPARTMENT OF TRANSPORTATION

ROUTE NO.	SECTION	COUNTY	TOTAL SHEETS	SHEET NO.
-	-	-		
FED. ROAD DIST. NO. 7		ILLINOIS	FED. AID PROJECT-	

SHEET NO. -
- SHEETS

Contract #

PILE DATA

Type:
Capacity:
Est. Length:
No. Req'd:

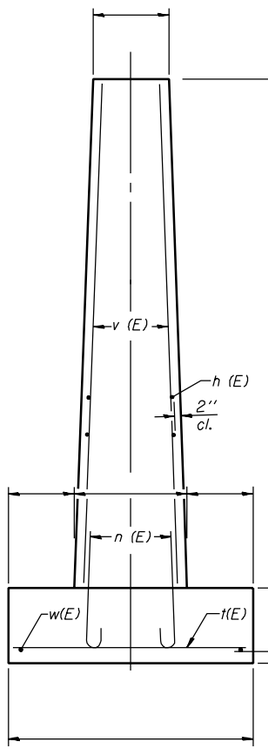

END VIEW

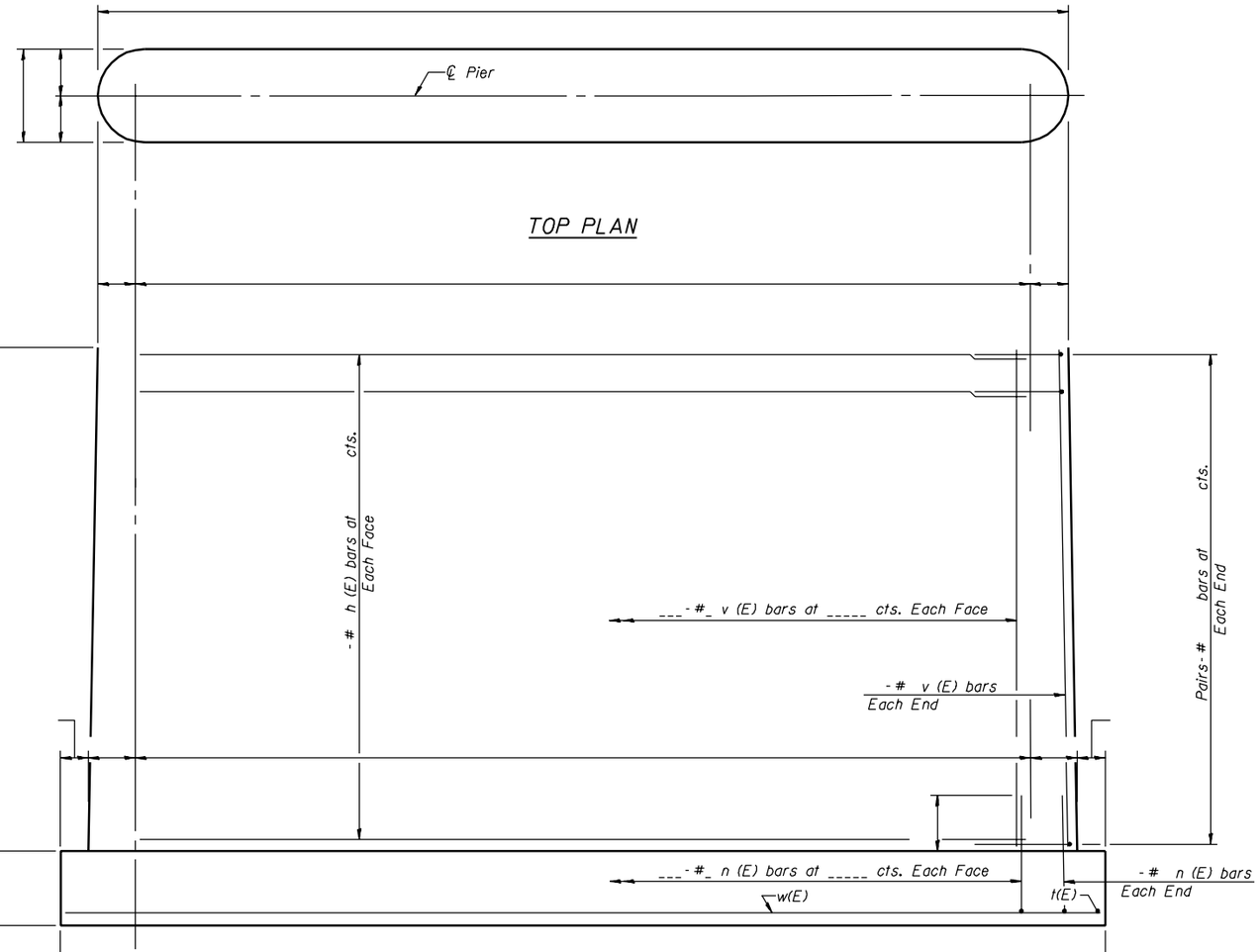

TOP PLAN

ELEVATION
(Looking)

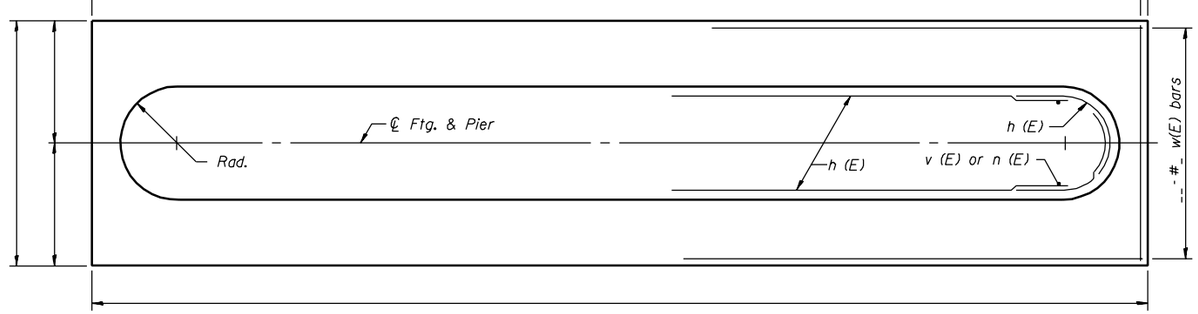

FOOTING PLAN

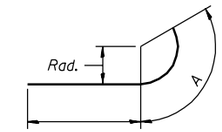

Bar	Rad.	A
h (E)		
h (E)		

DETAIL OF BARS
h (E)

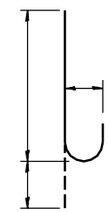

BAR n (E)

BILL OF MATERIAL

Bar	No.	Size	Length	Shape
h (E)		#		
h (E)		#		
n (E)		#		
t (E)		#		
v (E)		#		
w (E)		#		
Concrete Structures			Cu. Yd.	
Reinforcement Bars, Epoxy Coated			Pound	
Structure Excavation			Cu. Yd.	

Reinforcement Bars designated (E) shall be epoxy coated.

DESIGNED -	
CHECKED -	
DRAWN -	
CHECKED -	

- 200
EXAMINED
ENGINEER OF BRIDGE DESIGN
PASSED
ENGINEER OF BRIDGES AND STRUCTURES

PB-1 10-22-04

STATE OF ILLINOIS
DEPARTMENT OF TRANSPORTATION

ROUTE NO.	SECTION	COUNTY	TOTAL SHEETS	SHEET NO.
-				
-	-	-		
FED. ROAD DIST. NO. 7		ILLINOIS	FED. AID PROJECT-	

SHEET NO. -
- SHEETS

Contract #

Notes:
Space reinforcement in cap to miss anchor bolts.
Pour steps monolithically with cap.

PILE DATA

Type:
Capacity:
Est. Length:
No. Req'd:

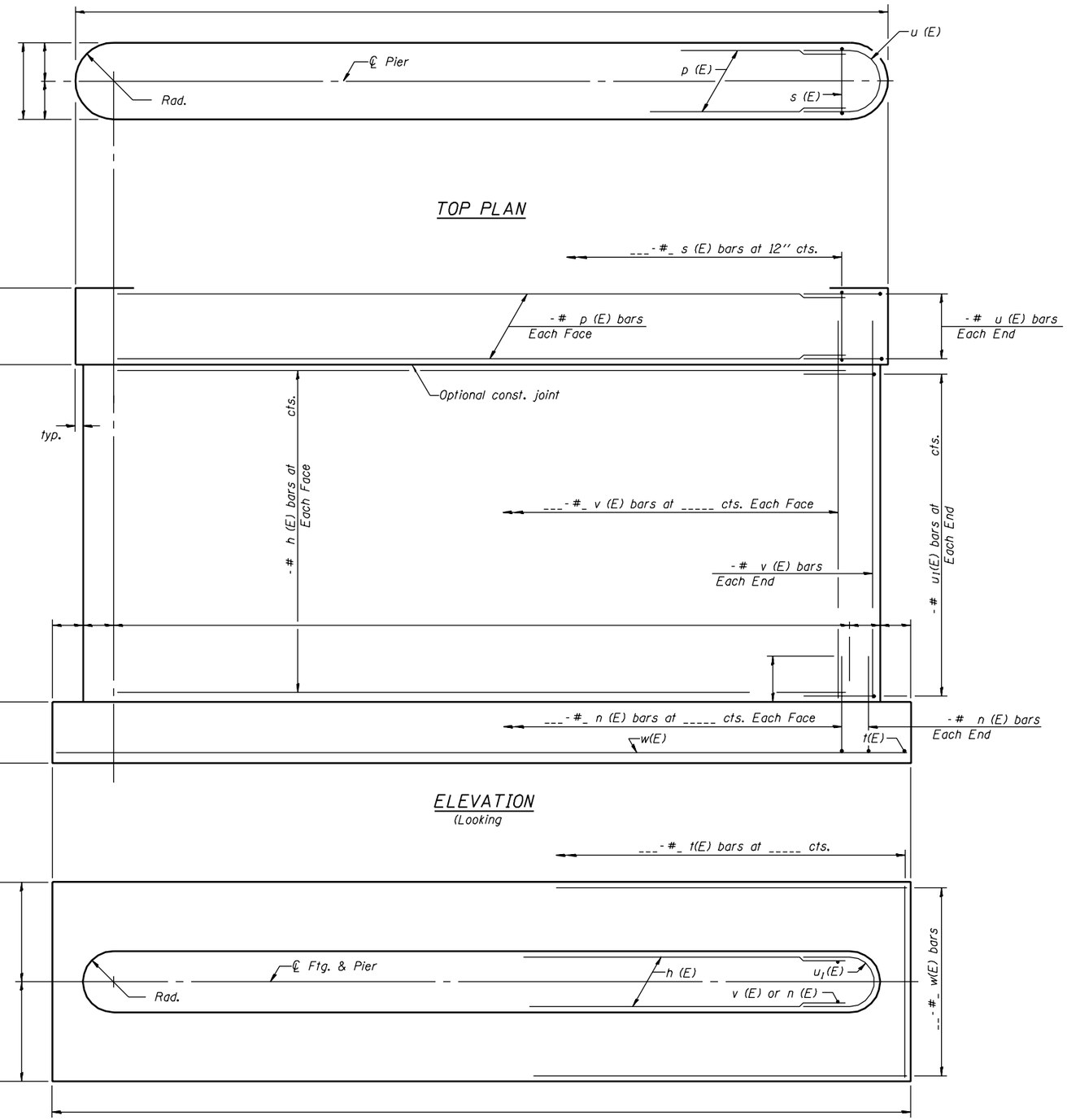

TOP PLAN

ELEVATION
(Looking

FOOTING PLAN

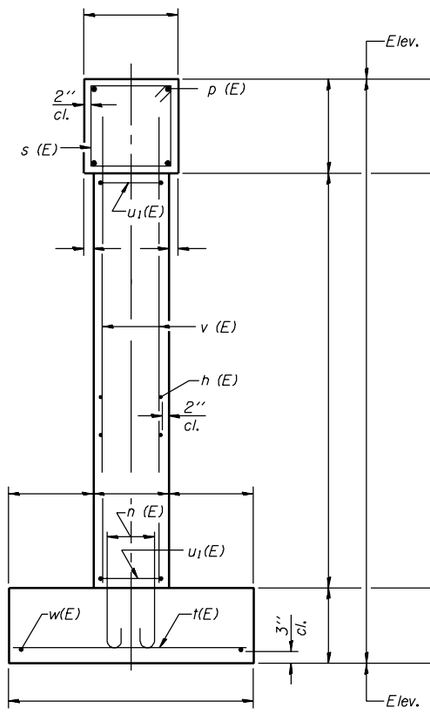

END VIEW

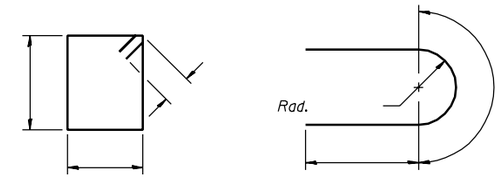

BAR s (E)

BARS u (E) & u1(E)

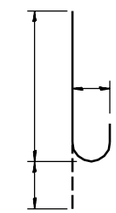

BAR n (E)

BILL OF MATERIAL

Bar	No.	Size	Length	Shape
h (E)		#		
n (E)		#		
p (E)		#		
s (E)		#		
t (E)		#		
u (E)		#		
u1(E)		#		
v (E)		#		
w (E)		#		
Concrete Structures			Cu. Yd.	
Reinforcement Bars, Epoxy Coated			Pound	
Structure Excavation			Cu. Yd.	

Reinforcement Bars designated (E) shall be epoxy coated.

DESIGNED -	
CHECKED -	
DRAWN -	
CHECKED -	

- 200
EXAMINED
ENGINEER OF BRIDGE DESIGN
PASSED
ENGINEER OF BRIDGES AND STRUCTURES

PC-1 10-22-04

STATE OF ILLINOIS
DEPARTMENT OF TRANSPORTATION

ROUTE NO.	SECTION	COUNTY	TOTAL SHEETS	SHEET NO.
-	-	-		
FED. ROAD DIST. NO. 7		ILLINOIS	FED. AID PROJECT-	

SHEET NO. -
- SHEETS

Contract #

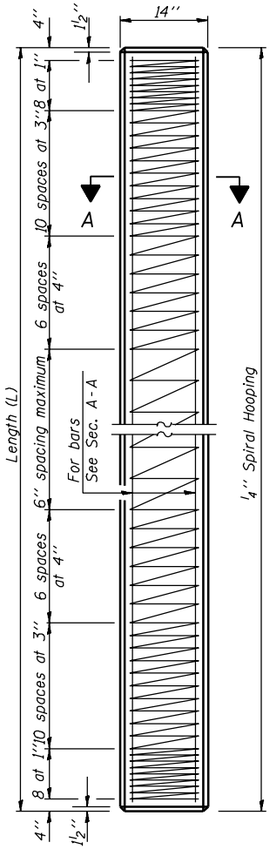

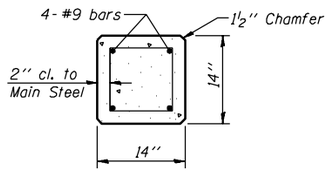

SECTION A-A
FOR PILES UNDER
45' LONG

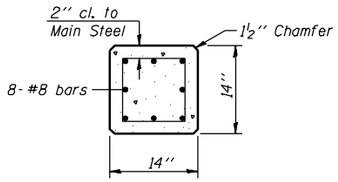

SECTION A-A
FOR PILES 45'
OR MORE

Handling: For Pile lengths up to 45' use two slings placed at a distance of 0.21L from each end. For Piles longer than 45', use three slings placed at a distance of 0.12L from each end and at mid point of pile.

DETAIL OF PRECAST
CONCRETE PILES

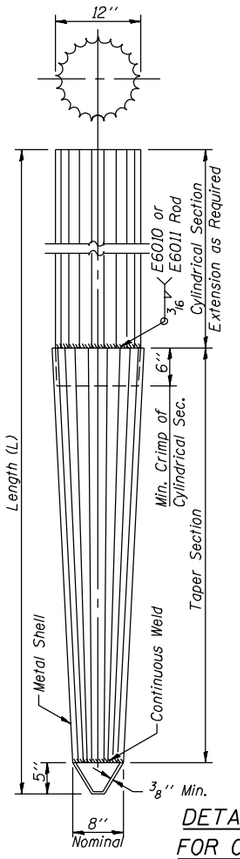

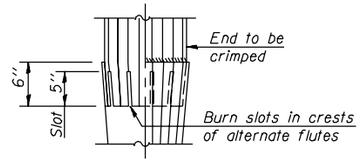

FIELD CRIMP DETAIL

Note:
6'' Crimp shall either be supplied on the cylindrical section or made in the field as detailed.

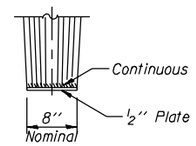

OPTIONAL FLAT END

ALLOWABLE TAPER SECTIONS

10' Length-Taper 1'' in 2'-6''
17' Length-Taper 1'' in 4'-0''
25' Length-Taper 1'' in 7'-0''
30' Length-Taper 1'' in 7'-0''

Note:
The thickness of the shell shall be 0.1495 inches with a tolerance of 5%. The shell shall be according to Article 1006.05(a) of the Standard Specification except that minimum yield strength for the steel after cold working shall be 50,000 p.s.i.

DETAIL OF TAPERED METAL SHELLS
FOR CAST IN PLACE CONCRETE PILES

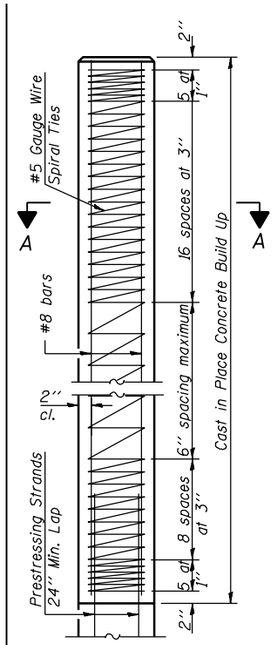

PILE BUILD UP

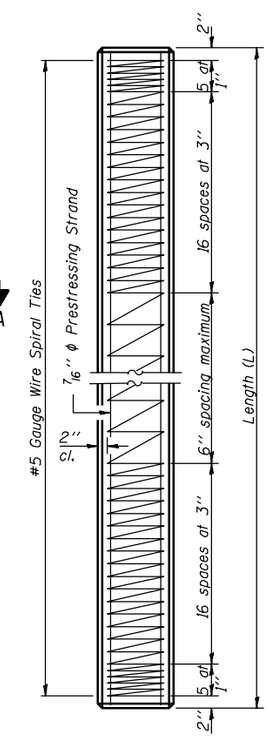

PILE PLAN

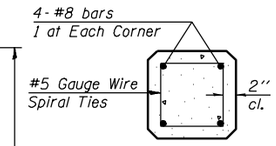

SECTION A-A

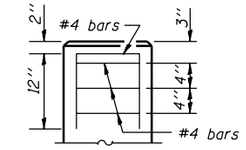

ELEVATION
(End Reinforcement)

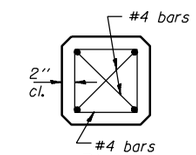

PLAN
(End Reinforcement)

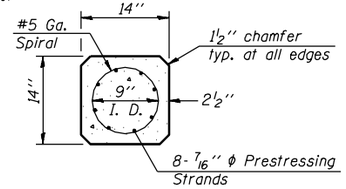

SECTION
THRU PILE

DESIGN STRESSES

f'_c = 5,000 p.s.i.
f'_{ci} = 4,000 p.s.i.
f'_s = 270,000 p.s.i. (31,000 lbs.-7/16'' ϕ or 41,300 lbs.-½'' ϕ)
f_{si} = 189,000 p.s.i. (21,700 lbs.-7/16'' ϕ or 28,900 lbs.-½'' ϕ)

NOTES

Prestressing steel shall be uncoated high strength, stress-relieved 7-wire strand. An equal substitution of low-relaxation strands for the stress-relieved strands will be permitted, provided the initial prestressing force applied to each strand is the same as that shown for stress-relieved strands. The nominal diameter shall be 7/16'' and the nominal cross-sectional area shall be 0.115 in² or the equivalent 6-½'' ϕ strands with a cross-sectional area of 0.153 in² may be used.

For Pile lengths up to 65', use two slings placed at a distance of 0.21 L* from each end. For Piles longer than 65', use three slings placed at a distance of 0.12 L* from each end and at midpoint of pile. *L = Overall length of pile to be handled.

PRECAST PRESTRESSED CONCRETE PILE

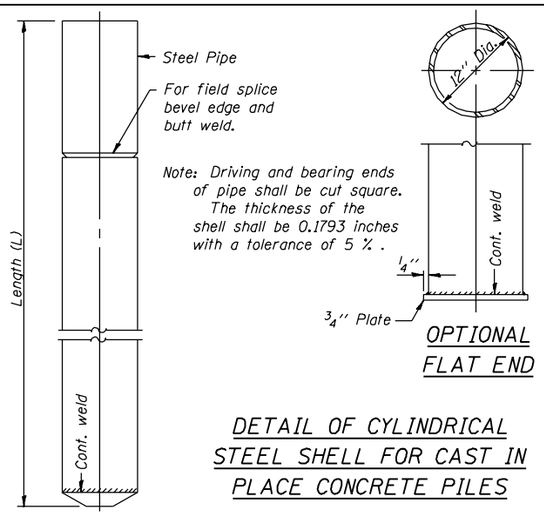

Note: Driving and bearing ends of pipe shall be cut square. The thickness of the shell shall be 0.1793 inches with a tolerance of 5 %.

OPTIONAL
FLAT END

DETAIL OF CYLINDRICAL
STEEL SHELL FOR CAST IN
PLACE CONCRETE PILES

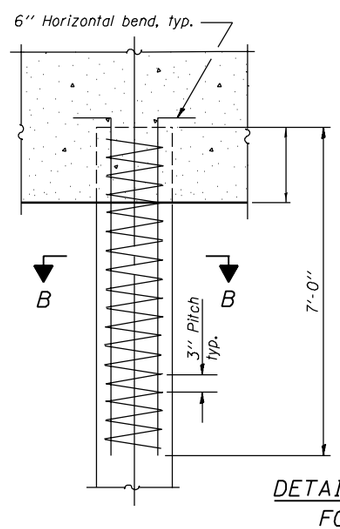

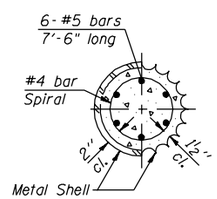

SECTION B-B

Reinforcement in top of pile shall be omitted under pier footings when placed in natural ground.

DETAIL OF REINFORCEMENT
FOR METAL SHELLS

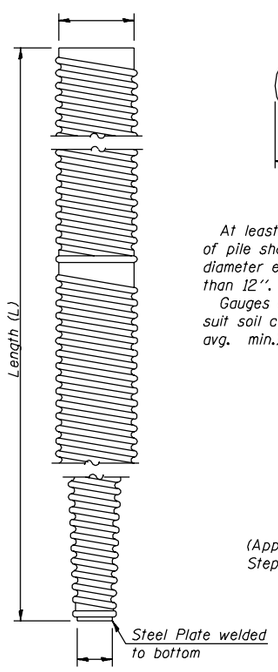

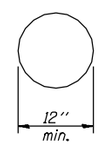

BUTT

At least 10% of the length of pile shall have a Butt diameter equal to or greater than 12''.

Gauges are furnished to suit soil conditions (16 Gauge avg. min.)

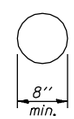

POINT
(Applies only to Step Taper type pile)

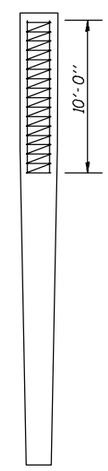

PILE REINFORCEMENT

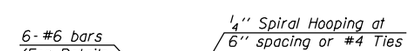

SECTION A-A

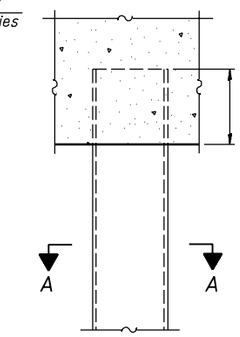

DETAIL OF MANDREL DRIVEN
STRAIGHT OR STEP-TAPER PILES
FOR CAST IN PLACE CONCRETE PILES

DESIGNED -	- 200
CHECKED -	EXAMINED
DRAWN -	PASSED — ENGINEER OF BRIDGE DESIGN
CHECKED -	ENGINEER OF BRIDGES AND STRUCTURES

X-3 10-22-04

STATE OF ILLINOIS
DEPARTMENT OF TRANSPORTATION

ROUTE NO.	SECTION	COUNTY	TOTAL SHEETS	SHEET NO.
-				
-	-	-		
FED. ROAD DIST. NO. 7		ILLINOIS	FED. AID PROJECT-	

SHEET NO. -
- SHEETS

Contract #

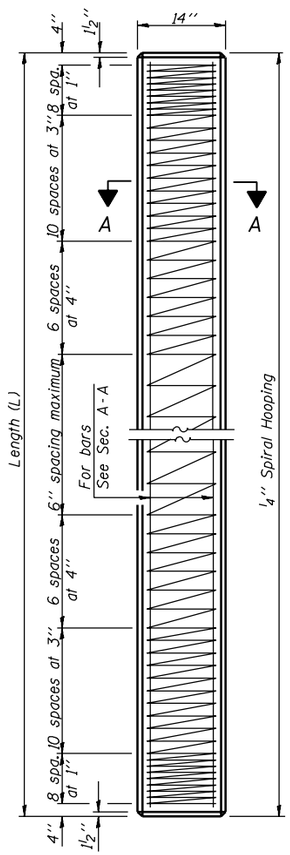

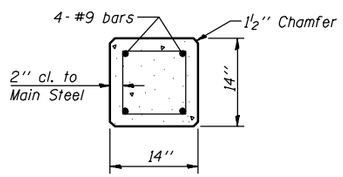

SECTION A-A
FOR PILES UNDER
45' LONG

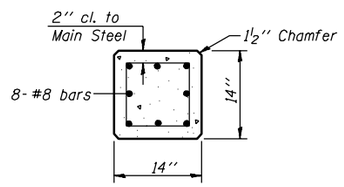

SECTION A-A
FOR PILES 45'
OR MORE

Handling: For Pile lengths up to 45' use two slings placed at a distance of 0.21L from each end. For Piles longer than 45', use three slings placed at a distance of 0.12L from each end and at mid point of pile.

DETAIL OF PRECAST
CONCRETE PILES

Notes:
Driving and bearing ends of pipe shall be cut square. The thickness of the shell shall be 0.250 inches with a tolerance of 5 %.
The shell shall be according to Article 1006.05(a) of the Standard Specifications.

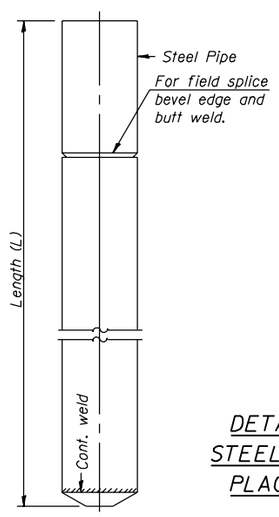

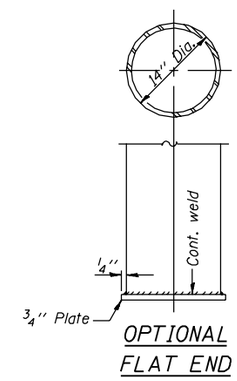

OPTIONAL
FLAT END

DETAIL OF CYLINDRICAL
STEEL SHELL FOR CAST IN
PLACE CONCRETE PILES

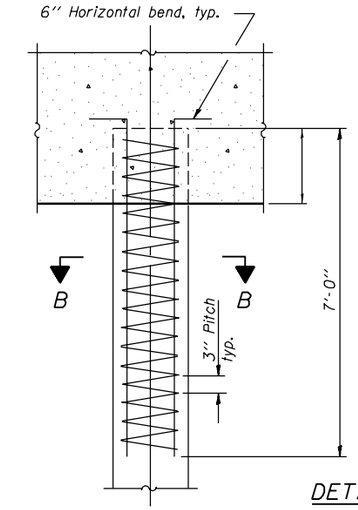

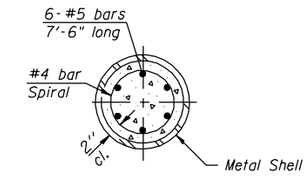

SECTION B-B

DETAIL OF REINFORCEMENT FOR
METAL SHELLS AT ABUTMENTS

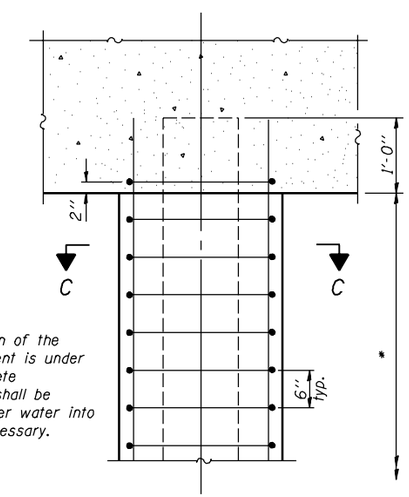

* If a portion of the pile encasement is under water, Concrete Encasement shall be tremmied under water into forms as necessary.

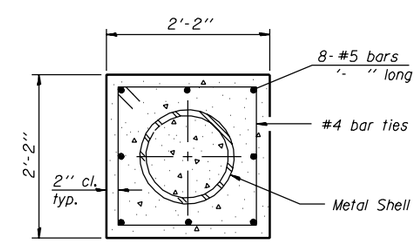

SECTION C-C

The cost of Reinforcement, concrete, and excavation for forms is included with Concrete Encasement.

DETAIL OF PROTECTION
FOR METAL SHELLS AT PIERS

DESIGNED -	
CHECKED -	
DRAWN -	
CHECKED -	

- 200

EXAMINED
ENGINEER OF BRIDGE DESIGN

PASSED
ENGINEER OF BRIDGES AND STRUCTURES

X-PB

10-22-04

CONCRETE PILE DETAILS