Chapter Thirty-Seven

INTERCHANGES

BUREAU OF DESIGN AND ENVIRONMENT MANUAL

Chapter Thirty-Seven
INTERCHANGES

Table of Contents

Section **Page**

37-1 GENERAL ..... 37-1(1)

37-1.01 Responsibilities ..... 37-1(1)
37-1.02 Guidelines ..... 37-1(1)
37-1.03 New or Revised Interstate Access Approval ..... 37-1(3)

37-1.03(a) FHWA Regulations ..... 37-1(3)
37-1.03(b) Applicability ..... 37-1(4)
37-1.03(c) Processing Procedures ..... 37-1(6)
37-1.03(d) FHWA Approvals ..... 37-1(8)
37-1.03(e) Access Justification Report Contents ..... 37-1(10)

37-2 GENERAL DESIGN CONSIDERATIONS ..... 37-2(1)

37-2.01 Interchange Spacing ..... 37-2(1)
37-2.02 Basic Number of Lanes ..... 37-2(1)
37-2.03 Lane Balance ..... 37-2(1)
37-2.04 Capacity and Level of Service ..... 37-2(3)
37-2.05 Auxiliary Lanes ..... 37-2(4)
37-2.06 Route Continuity ..... 37-2(4)
37-2.07 Uniformity ..... 37-2(7)
37-2.08 Left-Hand Ramps ..... 37-2(7)
37-2.09 Signing and Marking ..... 37-2(7)
37-2.10 Ramp Metering ..... 37-2(7)
37-2.11 Weaving Sections ..... 37-2(8)
37-2.12 Grading and Landscaping ..... 37-2(8)
37-2.13 Review for Ease of Operation ..... 37-2(8)
37-2.14 Geometric Design Criteria ..... 37-2(9)
37-2.15 Operational/Safety Considerations ..... 37-2(12)
37-2.16 Distance Between Successive Freeway Ramp Terminals ..... 37-2(13)

37-3 INTERCHANGE TYPES AND LAYOUTS ..... 37-3(1)

37-3.01 General ..... 37-3(1)
37-3.02 Conventional Diamond ..... 37-3(1)

37-3.02(a) General ..... 37-3(1)
37-3.02(b) Left-Turn Lanes ..... 37-3(4)
37-3.02(c) Ramp/Crossroad Intersections ..... 37-3(4)

Table of Contents
(Continued)

Section **Page**

37-3.02(d) Ramp Layout ..... 37-3(4)

37-3.03 Modified Diamond ..... 37-3(7)
37-3.04 Compressed Diamond ..... 37-3(9)

37-3.04(a) General ..... 37-3(9)
37-3.04(b) Ramp/Crossroad Intersections ..... 37-3(10)

37-3.05 Single-Point Urban Diamond ..... 37-3(12)

37-3.05(a) General ..... 37-3(12)
37-3.05(b) Design Considerations ..... 37-3(13)

37-3.06 Full Cloverleafs ..... 37-3(18)

37-3.06(a) General ..... 37-3(18)
37-3.06(b) Design Considerations ..... 37-3(20)

37-3.07 Partial Cloverleafs ..... 37-3(25)

37-3.07(a) General ..... 37-3(25)
37-3.07(b) Two-Quadrant Parclo Interchange ..... 37-3(33)
37-3.07(c) Four-Quadrant Parclo Interchange ..... 37-3(34)

37-3.08 Trumpet Interchange ..... 37-3(34)

37-3.08(a) General ..... 37-3(34)
37-3.08(b) Design Considerations ..... 37-3(37)

37-3.09 Directional and Semi-Directional Interchanges ..... 37-3(37)
37-3.10 Selection ..... 37-3(38)

37-4 RAMP DESIGN ..... 37-4(1)

37-4.01 Ramp Types ..... 37-4(1)

37-4.01(a) Loop Ramps ..... 37-4(1)
37-4.01(b) Diagonal Ramps ..... 37-4(1)
37-4.01(c) Outer-Connector Ramps ..... 37-4(3)
37-4.01(d) Semi-Directional Ramps ..... 37-4(3)
37-4.01(e) Directional Ramps ..... 37-4(3)

Table of Contents
(Continued)

Section **Page**

37-4.02 Collector-Distributor Roadways ..... 37-4(3)

37-4.02(a) Usage ..... 37-4(3)
37-4.02(b) Design ..... 37-4(4)

37-4.03 High-Speed Directional/Semi-Directional Roadways ..... 37-4(11)
37-4.04 Design Speed ..... 37-4(11)
37-4.05 Sight Distance ..... 37-4(13)
37-4.06 Cross Section Elements ..... 37-4(13)
37-4.07 Horizontal Alignment ..... 37-4(17)

37-4.07(a) Theoretical Basis ..... 37-4(17)
37-4.07(b) Design Controls ..... 37-4(17)
37-4.07(c) Length of Arc ..... 37-4(19)

37-4.08 Vertical Alignment ..... 37-4(19)

37-4.08(a) Grades ..... 37-4(19)
37-4.08(b) Vertical Curvature ..... 37-4(20)
37-4.08(c) Cross Sections Between Adjacent Ramps ..... 37-4(20)

37-4.09 Roadside Safety ..... 37-4(20)

37-5 RAMP/CROSSROAD INTERSECTIONS ..... 37-5(1)

37-5.01 General Design Criteria ..... 37-5(1)
37-5.02 Typical Intersection Designs ..... 37-5(4)

37-5.02(a) Diamond Interchange ..... 37-5(4)
37-5.02(b) Two-Quadrant Partial Cloverleaf Interchange ..... 37-5(4)
37-5.02(c) Four-Quadrant Partial Cloverleaf Interchange ..... 37-5(18)
37-5.02(d) Compressed Diamond with Slip Ramps ..... 37-5(18)

37-5.03 Crossroad Access Control ..... 37-5(24)

Table of Contents
(Continued)

Section **Page**

37-6 FREEWAY RAMP TERMINALS ..... 37-6(1)

37-6.01 Exit Ramp Terminals ..... 37-6(1)

37-6.01(a) Types ..... 37-6(1)
37-6.01(b) Sight Distance ..... 37-6(4)
37-6.01(c) Alignment ..... 37-6(4)
37-6.01(d) Superelevation and Cross Slopes ..... 37-6(14)
37-6.01(e) Gore Area ..... 37-6(15)
37-6.01(f) Structures ..... 37-6(17)

37-6.02 Entrance Ramps ..... 37-6(19)

37-6.02(a) Types ..... 37-6(19)
37-6.02(b) Length ..... 37-6(21)
37-6.02(c) Sight Distance ..... 37-6(26)
37-6.02(d) Superelevation and Cross Slopes ..... 37-6(26)
37-6.02(e) Gore Area ..... 37-6(26)

37-6.03 Ramp/Roadway Divergence Applications ..... 37-6(26)

37-6.03(a) Major Divergences ..... 37-6(26)
37-6.03(b) Minor Divergences ..... 37-6(27)

37-6.04 Ramp/Roadway Convergence Applications ..... 37-6(32)

37-6.04(a) Major Convergences ..... 37-6(32)
37-6.04(b) Minor Convergences ..... 37-6(32)

37-7 REFERENCES ..... 37-7(1)

CHAPTER THIRTY-SEVEN

INTERCHANGES

AASHTO defines an interchange as a system of interconnecting roadways in conjunction with one or more grade separations that provide for the movement of traffic between two or more roadways on different levels. The operational efficiency, capacity, safety, and cost of the highway facility are largely dependent upon its design. Chapter 37 provides guidance in the design of interchanges including interchange types, selection, layout, operations, spacing, freeway ramp terminals, ramps, and ramp/crossroad terminals. Information that is also applicable to interchanges is included in the following chapters:

- Chapter 15 discusses the procedures and content for interchange type and design studies.
- Chapter 35 discusses access control along interchange crossroads.
- Chapter 36 discusses intersection designs, including left-turn lanes, channelizing islands, turning radii, design vehicles, etc.
- Chapter 44 discusses freeway new construction and reconstruction design criteria, lane drops, frontage roads, grade separations, and access control along the freeway.
- Chapter 50 discusses freeway 3R design criteria.

37-1 GENERAL

37-1.01 Responsibilities

The district office is responsible for determining the need for, location of, type of, and design of interchanges. For interchange types other than the conventional diamond and parclo Type C, the district must receive approval from BDE on the selection and layout of the interchange.

37-1.02 Guidelines

The need for an interchange will vary based on site-specific conditions. Consider the following guidelines when determining the need for an interchange:

1. Access Control. The following will apply:

a. Full Access Control. On all fully access-controlled facilities, intersecting crossroads must be terminated, rerouted, provided a grade separation, or provided an interchange. The importance of the continuity of the crossroad, the feasibility of an alternative route, traffic volumes, construction costs, environmental impacts, etc., are evaluated in order to determine which option is most practical. Interchanges generally are provided at:

- all freeway-to-freeway crossings;
- all major highways, unless determined inappropriate; and
- other highways based on the anticipated demand for regional access.

b. Partial Access Control. On facilities with partial access control (expressways), intersections with public roads will be accommodated by an interchange or with an intersection. Grade separations are rarely provided. Interchanges should be constructed or planned at most marked route crossroads according to the following guidelines:

- Initially construct an interchange where traffic signals are warranted within nine years of construction.

- Where signals are warranted within 10 to 20 years, plan for the future development of an interchange. Purchase the access rights for approximately 1000 ft to 1200 ft (300 m to 350 m) along each leg of the major crossroad.

- Where a low-volume marked routes exists within 2 miles (3.0 km) of another parallel marked route, or high-volume crossroad, consider relocating the low-volume route and providing one interchange for both routes.

- An interchange generally will not be warranted where traffic signals are not warranted within the 20-year design period.

c. No Access Control. On a facility with no access control, the need for an interchange will be determined on a case-by-case basis emphasizing cost effectiveness, safety, and operations. A road-user benefit analysis will generally be required to determine the economic feasibility of an interchange. See Item 5. However, this analysis alone is not sufficient justification for the provision of an interchange.

2. Congestion. Consider providing an interchange where the level of service (LOS) at an intersection is unacceptable, and the intersection cannot be redesigned to operate at an acceptable LOS.

3. Safety. In special cases, consider the crash reduction benefits of an interchange at an existing intersection that exhibits extremely high-crash frequencies and rates.

4. Site Topography. Where access is necessary, the topography may dictate an interchange or a grade separation rather than an intersection.

5. Road-User Benefits. If an analysis reveals that road-user benefits over the service life of the interchange will exceed costs, then an interchange may be considered. The designer must consider all costs including right-of-way, construction, maintenance, and user costs in the analysis. For additional guidance, the designer may refer to the AASHTO publication *A Manual on User Benefit Analysis of Highway and Bus-Transit Improvements*.

6. Access. An interchange may be required in an area where access availability from other sources is not practical, and the freeway is the only facility that serves the area.

7. Traffic Volumes. Although there are no specific traffic volumes that warrant an interchange, consider providing an interchange where the traffic volumes at an intersection are at or near capacity and where other improvements are not practical.

37-1.03 New or Revised Interstate Access Approval

37-1.03(a) FHWA Regulations

Section 111 of Title 23, *United States Code* (23 USC 111) identifies that all agreements between FHWA and IDOT for the construction of projects on the Interstate System must contain a clause that IDOT will not add any points of access to, or exit from, the project in addition to those approved by FHWA in the plans for the project, without the prior approval of FHWA. 23 CFR 625 designates those criteria and policies that are acceptable to FHWA for the geometric and structural design of highways, including Interstate facilities.

The original FHWA policy regarding new or revised access points to existing Interstate facilities was first published in the *Federal Register* on October 22, 1990 and then revised in the February 11, 1998 *Federal Register*. The revised policy incorporates the planning requirements of the *1991 Intermodal Surface Transportation and Efficiency Act*, clarifies the coordination between the access request and environmental procedures, and updates the policy language at various locations. Additional guidance from FHWA Headquarters office was established in 1996 and 1997. This guidance allowed FHWA Division Offices to approve more Interstate revisions in access and established a two-step process for approving these changes.

New or revised access points to the existing Interstate System will be reviewed against the criteria in Section 37-1.03(b). Sections 37-1.03(d) and 37-1.03(e) define the information required to be included in final submittals to FHWA when requesting approval for revisions in Interstate access. Section 37-1.03(c) provides the procedures obtaining approvals from IDOT and/or FHWA.

37-1.03(b) Applicability

In general, all new and/or revised access points should be minimized on existing fully access-controlled facilities. Each entrance and exit point on the mainline, including "locked gate" access (e.g., utility opening), is defined as an access point. For example, a diamond interchange configuration has four access points. Revised access is considered to be a change in the existing interchange configuration although the number of access points may not change. For example, replacing one of the direct ramps of a diamond interchange with a loop or changing a cloverleaf interchange into a fully directional interchange is considered to be a revised access.

The criteria in Section 37-1.03 is applicable to new or revised access points to existing fully access-controlled facilities (Interstate and non-Interstate facilities) regardless of the funding source. Consequently, it applies to private developers, and any changes to an access-controlled facility, which may be required of the private developer by IDOT or a local agency.

Each access revision will need to be analyzed on a case-by-case basis. Consider the following:

1. Revisions Requiring BDE/FHWA Access Approval. The following revisions to access-controlled facilities will require BDE/FHWA access approval:

   - new freeway-to-freeway interchange;
   - major modification of freeway-to-freeway interchange configuration (e.g., adding new ramp(s), abandoning/removing ramp(s), completing basic movements);
   - new partial interchange or new ramps to-from continuous frontage road that create a partial interchange (e.g., slip ramps);
   - new freeway-to-crossroad interchange (e.g., addition of a combination of on-ramps and off-ramps);
   - modification of existing freeway-to-crossroad interchange configuration (e.g., replacing one of the direct ramps of a diamond interchange with a loop);
   - completion of basic movements at partial interchange (e.g., completing a partial diamond interchange by adding a ramp, the addition of any on- or off-ramp to the mainline);
   - locked gate access (e.g., access via locked gates by privately employed personnel); and
   - abandonment of ramps or interchanges.

2. Revisions not Requiring FHWA Access Approval. The following revisions to access-controlled facilities are not considered a change in access and, therefore, do not require FHWA access approval, but still may require BDE approval:

   a. Ramp/Crossroad Improvements. This includes the addition of left-turn storage lanes, right-turn storage lanes, and through travel lanes at the local road end of ramps. These additions will inherently and expeditiously increase ramp safety for ramps which chronically back-up onto the mainline travel lanes, by shortening the queue lengths and minimizing the occurrence of high-speed, rear-end collisions. For the proposed addition of new storage and through travel lanes at the local termini of existing ramps, ensure that adequate stopping sight distance, decision sight distance, geometrics, etc. are provided.

   b. Ramp Relocation. This includes relocation or shifting of existing crossroad/ramp termini (i.e., moving the ramp end which connects with the local road). However, the designer must still ensure that adequate stopping sight and decision sight distance are provided at the ramp terminal.

   c. Auxiliary Lanes. This includes the addition of a single auxiliary lane between two adjacent interchange ramps. The single auxiliary lane should not function as a mainline travel lane.

   d. Acceleration and Deceleration Lanes.

      i. Decreasing the Length. Decreasing the length of any deceleration lane or acceleration lane on any existing ramps is not considered a change in access. However, prior to decreasing the length, conduct a safety analysis by analyzing the crash history and potential, review the sight distance, and ensure adequate signing is provided.

      ii. Increasing the Length. Increasing the length of an off-ramp deceleration lane or increasing the length of an on-ramp acceleration lane is not considered a change in access. If the adjacent upstream on-ramp or adjacent downstream off-ramp exists at a distance equal to or less than the criteria in Section 37-2.16 (i.e., measured between physical gore areas), conduct an operational analysis (e.g., weaving, capacity, signing). The spacing between interchanges should safely accommodate weaving, diverging, merging maneuvers, and good directional signing.

      iii. Design Exceptions. If the design criteria cannot be met, obtain a design exception for the improvement. See Section 31-8 for the procedures for obtaining a design exception.

e. Addition of On-Ramp Lanes. This consists of adding a lane to a single lane on-ramp, resulting in a two-lane on-ramp. Although an individual access justification approval is not required, the IDOT will be responsible for conducting an operational analysis (e.g., weaving, capacity, signing).

f. Traffic Signals. This includes traffic signalization improvements at ramp termini with local roads.

g. Signing and Pavement Markings. This includes new signing, striping, and/or resurfacing of an on-ramp or off-ramp where geometric features are not changed.

h. Roadside Safety. Installation of roadside guardrail and concrete barriers (e.g., for resurfacing and safety projects) will not require access approval.

37-1.03(c) Processing Procedures

BDE and FHWA must approve all proposed changes in interchange configurations on the Interstate System, even if the number of access points does not change. For proposed changes on non-Interstate freeways, BDE or the Bureau of Operations will review and approve any access changes (i.e., FHWA will not be regularly involved for these facilities).

The following procedures are applicable where 1) the highway is on the State highway system and Federal funds were used for right-of-way and/or construction costs of the roadway segment; and 2) the highway is access controlled and the proposed access revisions will modify previous commitments made in environmental documents:

1. Environmental Procedures. The FHWA revised access approval constitutes a Federal action, and as such, requires that the *National Environmental Policy Act* (NEPA) procedures be followed for projects on the Interstates. NEPA procedures also apply even when changes to an Interstate facility are being financed completely by the State, local municipality, or a private developer. The NEPA procedures will be accomplished as part of the normal project development process and as a condition of the access approval. The district office will determine the type and scope of the necessary environmental process in cooperation with FHWA; see Chapter 22. Generally, this will occur at scheduled district coordination meetings. Compliance with the NEPA procedures should proceed concurrently with the analyses to determine engineering acceptability and feasibility. Although compliance with the NEPA procedures need not precede the determination of engineering acceptability and feasibility, the FHWA Illinois Division Office will not give final access approval before the completion of the NEPA process.

2. Secondary Impacts. Determine the secondary impacts associated with the proposed access revisions based on traffic-induced impacts on the State highway facility and on the potential environmental impacts on the surrounding area. Because the area of influence

on the highway facilities and surrounding land use will vary, describe the limits of influence for each case prior to determining impacts.

3. Outside Agency Proposals. The district will recommend whether IDOT or the agency requesting the revision will conduct the studies. BDE will review and approve Phase I reports.

4. FHWA Coordination. BDE usually will review and approve the interchange type and interchange design studies (IDS) using the Department's Certification Acceptance procedures except where the action is proposed on the Interstate system. For Interstates, FHWA must also agree on the type and the design details, see Section 37-1.03(d). IDOT must discuss with FHWA any proposed access control revisions on the NHS at scheduled district coordination meetings.

5. Central Office Processing. Access control revisions along a freeway will be processed by the Central Office in the following manner:

   a. Bureau of Operations. In general, proposed revisions in the access control along freeways and along interchange crossroads on the State highway system will be reviewed and processed by the Bureau of Operations except where location/design studies are necessary and/or where IDOT construction funds are used in the action.

   b. BDE. Where design studies and/or construction funds are used in the proposed action requiring access control revisions, BDE will review and process the proposed action.

   c. Freeway Orders. Projects involving a revision to an existing Freeway Order will be handled by either BDE or the Bureau of Operations up to the stage where a Freeway Order revision is filed for approval. After this stage, BDE will process the revision of the Freeway Order.

   d. Impact Assessments. Where assessments of the impacts of proposed access control revisions are required, BDE will determine what elements should be considered in the review and processing of the assessment. Proposed access changes should be discussed at district coordination meetings and then submitted for review early in the NEPA process. This procedure will allow for a timely determination of engineering and operational acceptability and will ensure that the proposed design is acceptable for inclusion as an alternative in the environmental process.

   e. Overlapping. Where the criteria are overlapping, unclear, or there is uncertainty about who is responsible for conducting the review and processing of the request, BDE and the Bureau of Operations will coordinate to determine which Bureau will take responsibility for the request.

f. FHWA Approval. Submit the Access Justification Report (AJR) to the FHWA Division Office for approval. This submission will be a "stand-alone" document that will show reasonable care has been performed and confirm future safety and traffic operations along the Interstate corridor will not be adversely affected by the proposed new or revised Interstate access. Section 37-1.03(d) further discusses FHWA approvals.

g. Filing. BDE will retain on file the approved revision in access submittal.

6. Coordination Meetings. The agendas for scheduled district coordination meetings should clearly distinguish projects involving proposed access control revisions from other projects. Furnish this information in adequate time to allow either BDE or Bureau of Operations to facilitate their attendance.

37-1.03(d) FHWA Approvals

FHWA approval is only required where there are new or revised access points to the Interstate System. For non-Interstate routes, BDE or the Bureau of Operations will review and approval any access changes. The following will apply to Interstate routes:

1. Design Criteria. All FHWA approvals for new, added or revised access is conditioned upon IDOT complying with all applicable Federal rules and regulations. For Illinois, this design criteria is contained in the *BDE Manual* and the *Illinois Highway Standards* which meet or exceed the criteria presented in the AASHTO publications *A Policy on Geometric Design of Highways and Streets* and *A Policy on Design Standards - Interstate System*.

2. FHWA Concept Approval. Concept approval is the first step in the FHWA approval process and involves a determination of safety engineering, and operational acceptability. Ideally, it should be done as soon as possible and when the Department has a good understanding of the scope of the improvement. The FHWA Division Office and IDOT will develop a consensus on proposed access concepts at the coordination meetings. FHWA concept approval will need to be received from either the FHWA Headquarters Office (Washington, D.C.) or from the FHWA Illinois Division Office (Springfield, IL). The following identifies the FHWA office that will submit the approval:

   a. FHWA Headquarters Concept Approval. Concept review and approval is required from the FHWA Headquarters (HQ) Office for the specific major Interstate access requests that are listed below. Item 3 discusses the information that needs to be provided to the local FHWA Division Office for FHWA HQ concept review and approval. Three copies of the official transmittals requesting FHWA HQ concept approval, and local FHWA Division Office final approval, will need to be sent to the FHWA Division Office. Note that

advance coordination with the FHWA HQ Office may be necessary, and appropriate, on certain complex and/or controversial projects which will require FHWA HQ concept review and approval during the project's environmental process. In these cases, IDOT should coordinate directly with the local FHWA Division Office. The FHWA HQ Office concept approval is required for the following types of Interstate revised access:

- new freeway-to-freeway interchange,
- major modification of freeway-to-freeway interchange configuration,
- new partial interchange or new ramps to/from continuous frontage road that create a partial interchange, and
- new freeway-to-crossroad interchange located in a Transportation Management Area (TMA).

b. FHWA Illinois Division Office Concept Approval. The FHWA Division Office and the Department will develop a consensus on proposed access concepts at coordination meetings, which are documented in the Access Justification Report (AJR); see Section 37-1.03(e). FHWA Division Office concept approval will be given by the FHWA Division Administrator. Send the AJR to the FHWA Division Office with signature lines for the FHWA Division Office Field Engineering Manager (FEM) (recommend approval) and for the FHWA Division Office Division Administrator (for approval). The signed AJR will document FHWA concept approval. Once signed, the AJR will be sent to IDOT. The FHWA Division Office gives concept approval for the following types of Interstate revised access:

- new freeway-to-crossroad interchange not located in a TMA,
- modification of existing freeway-to-crossroad interchange configuration,
- completion of basic movements at partial interchange,
- locked gate access, and
- abandonment of ramps or interchanges.

3. FHWA Final Approval. Final approval from FHWA is only given after receipt of FHWA concept approval. The FHWA Division Office gives final approval for all types of Interstate access changes and is made by the FHWA Division Administrator. The earliest final approval can be given is after completion of the NEPA process.

Generally, final approval of an access revision is accomplished via IDOT request for FHWA design approval of the Phase I report, after completion of the NEPA process, for the improvement which includes the access revision. No additional information is

required for the final access revision approval request unless any conditions noted in the AJR have changed substantially.

As noted in Item 2 above, IDOT should ideally seek Concept Approval as soon as possible once the scope of the improvement is fairly well understood. Concept Approval can be sought at any point up to or even after the completion of the NEPA process.

When no Phase I report is required, Concept Approval and the completion of the NEPA process are needed for the Final Approval of Access Revision.

37-1.03(e) Access Justification Report Contents

The Access Justification Report (AJR) should include the following:

1. Description. Provide a clear description of the proposed new or revised access.

2. Purpose. Describe the purpose and need for the new or revised access point (i.e., why it is needed).

3. Cost. Include the estimated total cost of the project.

4. Background Information. Provide any additional background support information that might help explain and/or support the proposal (e.g., developer driven, known public opposition, status of the NEPA process including the summary of any input received from public meetings, source of project funding, implementation schedule).

5. Concerns. List any known areas of concern (e.g., environmental, safety). Always include a crash analysis summary for all new or revised access requests. Identify all presently known “High Crash Locations” within or adjacent to the project limits, and proposed mitigation measures to improve safety in the future. FHWA must be assured that there will be steps taken so that either no impact or only minimal adverse impact on safety and operation of the Interstate facility itself will occur.

6. Communities. Note the distances to and size of communities or facilities directly served.

7. Connections. Describe the relationship and distance of the interchange to adjacent interchanges, adequacy of acceleration, deceleration and weaving lengths, and the ability to provide adequate signing.

8. Design Exceptions. Clearly identify any necessary design exceptions from currently adopted BDE design criteria; see Section 31-8.

9. Traffic Signals/Signing. Identify any additional proposed traffic signalization and signing, if applicable.

10. Lane Balance. Describe how the interchange will provide lane balance and the basic number of lanes.

11. Existing Facilities. FHWA policy states: "The existing interchanges and/or local roads and streets in the corridor can neither provide the necessary access nor be improved to satisfactorily accommodate the design-year traffic demands while at the same time providing the access intended by the proposal." The intent of this requirement is to demonstrate that an access point is needed for regional traffic needs and not to solve local system needs or problems. The facility should not be allowed to become part of the local circulation system, but be maintained as the main regional and interstate highway it was intended to be.

    In the case of adding a new interchange or new ramp(s), evaluate or consider whether existing or possible future roads or streets generally parallel to the Interstate facility that could be used as a connection to existing adjacent interchange ramps in lieu of adding a new interchange or ramps.

12. Transportation System Management. FHWA policy states: "All reasonable alternatives for design options, location, and transportation system management type improvements (such as ramp metering, mass transit, and HOV facilities) have been assessed and provided for if currently justified, or provisions are included for accommodating such facilities if a future need is identified." The intent of this requirement is to ensure that all reasonable alternatives, including improvements to the existing local roads and streets in lieu of new access, have been fully considered.

13. Access Connections and Design. FHWA policy states: "The proposed access connects to a public road only and will provide for all traffic movements (except in only the most extreme circumstances …). Less than "full interchanges" for special purpose access for transit vehicles, for HOV's, or into park and ride lots may be considered on a case-by-case basis. The proposed access will be designed to meet or exceed current standards for Federal-aid projects on the Interstate System." The intent of this requirement is that, except in the most extreme circumstances, all interchanges should provide for all basic movements. Partial interchanges usually have undesirable operational characteristics. If circumstances exist where a partial interchange is considered appropriate, then commitments to the FHWA, possibly even purchase of necessary right-of-way during the initial project stage for future completion, must be made by IDOT. Special purpose access for HOV's, for transit vehicles, or for park and ride lots should be treated as special cases and the movements to be provided decided on a case-by-case basis.

14. Transportation Land Use Plans. FHWA policy states: "The proposal considers and is consistent with local and regional land use and transportation plans. Prior to final approval, all requests for new or revised access must be consistent with the metropolitan

and or statewide transportation plan, as appropriate, the applicable provisions of 23 CFR part 450 and transportation conformity requirements of 40 CFR parts 51 and 93." The intent of this requirement is to cause sufficient review and coordination so as not to have piece-meal consideration of added access and to avoid as much as practical future conflict with other, possibly more needed, access. The request should include a discussion as to how the current proposal fits into the overall plans for the area and, if it is an addition to the current plans for the area, how it fits in and affects the current plans. Added access requests do not have to be included in official transportation plans or approved by MPO's or similar organizations prior to submittal. All coordination may be completed after access approval and as part of the normal project development process. The expectation here is that any proposal is considered in view of currently known plans for transportation facilities and/or land use planning. This is especially important when several new interchanges are anticipated.

15. Comprehensive Interstate Network Study. FHWA policy states: "In areas where the potential exists for future multiple interchange additions, all requests for new or revised access are supported by a comprehensive Interstate network study with recommendations that address all proposed and desired access within the context of a long-term plan." The intent of this requirement is analyze and consider all proposed changes in access for an area at the same time. See Section 37-1.03(d) for guidance regarding adjacent interchange spacing which trigger the need for FHWA approval. If a new or revised interchange is being proposed and another new or revised adjacent interchange is being planned and programmed by IDOT then analyze both changes together.

16. Coordination with Transportation System Improvements. FHWA policy states: "The request for a new or revised access generated by new or expanded development demonstrates appropriate coordination between the development and related or otherwise required transportation system improvements." It is recognized that more and more private involvement in transportation improvements will be happening in the future. The intent of this requirement is not to try to control developers and their plans through IDOT, which has no such direct powers. It is incumbent upon IDOT, however, to ensure that the highway facilities are developed in an orderly and coordinated manner to serve the public. Therefore, when private development is clearly the driving force behind the need for access, it is only reasonable that the IDOT and the developer work closely together in order to develop the access to achieve mutual benefits with minimal adverse impact on travelers. Stage construction could be used where extensive private development is not expected to be completed for several years. The developer might be required to have certain parts of the local circulation system ready before ramps can be constructed or opened to traffic. In some heavily congested areas, the developer might be required to provide ride sharing incentives or even assist in providing transit facilities. The intent is therefore to accomplish any coordination that might be possible, even if it is only to know what each is doing and when.

This coordination and cooperation is appropriate where a developer has agreed to fund or perhaps even construct access at the same time the IDOT is planning or is already in the process of improving that particular section of the route. It is only reasonable that these activities be coordinated to ensure compatibility.

17. Status of Planning and NEPA. FHWA policy states: "The request for new or revised access contains information relative to the planning requirements and the status of the environmental processing of the proposal." The intent of this requirement is to confirm and report information relative to the status of the planning and NEPA processes, with regard to the access request (e.g., anticipated schedule dates, public hearing dates, public support or opposition, recent activities, future activities).

18. Operational Analysis. FHWA policy states: "The proposed access point does not have a significant adverse impact on the safety and operation of the Interstate facility based on an analysis of current and future traffic. The operational analysis for existing conditions shall, particularly in urbanized areas, include an analysis of sections of Interstate to and including at least the first adjacent existing or proposed interchange on each side. Crossroads and other roads and streets shall be included in the analysis to the extent necessary to assure their ability to collect and distribute traffic to and from the interchange with the new or revised access points." The intent of this requirement is to ensure that sufficient operational analyses are made to determine the impact of the revised or new access on the Interstate operation. For consistency, it is anticipated that the current *Highway Capacity Manual* analysis procedures will be used.

At a minimum, the operational impact on the mainline between the proposed new/revised access and the adjacent existing interchanges on either side should be analyzed. The analysis should be extended as far along the mainline and include as many existing interchanges as is necessary to establish the extent and scope of the impacts. This could be critical in urban areas with many relatively closely spaced interchanges (i.e., interchanges spaced at less than 1 mile (1.6 km) apart).

The operational analysis of the proposed change will need to be designed to a design year which is 20 years after the date when the construction of the project is scheduled to be complete, and open to the traveling public.

In order to perform an operational analysis which is as accurate as possible, the traffic volume counts used should not be more than 2 years old, if practical.

The following additional items are required by the *current* FHWA Illinois Division Administrator for any Access Justification Report (AJR) to even be considered for approval:

- A brief discussion of the anticipated safety implications of the proposed access point on mainline Interstate traffic given the existing analysis of projected changes in traffic flow and level of service.

- A brief discussion of the anticipated safety implications of the proposed access point on mainline Interstate traffic given the existing analysis of the geometrics of existing nearby interchanges, the geometrics associated with the proposal, and shifts in nearby traffic patterns.

- A brief summary of the crash history of the affected Interstate segment, a comparison of this history with statewide averages for comparable facilities, and the identification of any high-accident locations on the affected Interstate segment.

- A brief concluding statement summarizing the level of impact the proposed access point change is expected to have on safety performance of the mainline Interstate facility.

- A brief concluding statement summarizing the level of impact the proposed access point change is expected to have on traffic flow performance of the mainline Interstate facility.

The operational analysis should typically include some or all of the information in Items 19 and 20.

19. Interchange Location Map. Include a dimensioned, detailed drawing of the design elements of the existing and proposed change conditions, including, as applicable:

- project limits,
- adjacent interchange(s),
- ramp to be added,
- ramp to be removed,
- relocation of ramp gore,
- configuration,
- travel lanes and shoulder widths,
- ramp radii,
- ramp grades,
- acceleration lane lengths,
- deceleration lane lengths,
- taper lengths,
- auxiliary lane lengths,
- taper or parallel type exit ramps,
- truck climbing lane(s),

- auxiliary/operational lane(s), and
- collector/distributor road(s).

The drawing, and/or report wording, should identify all presently known pertinent engineering design details of the proposed change. Clearly identify any design exceptions, and compare them with the latest BDE and AASHTO criteria.

Include another drawing showing the traffic volumes for all turning movements as well as mainline, ramp, and local road traffic volumes. Identify current and design year ADT and DHV.

20. Highway Capacity Analysis. Use the current *Highway Capacity Manual* (HCM), or current version of the *Highway Capacity Software* (HCS), for the needed engineering analyses. An acceptable engineering analysis for determining engineering acceptability and feasibility will need to be determined jointly by FHWA and IDOT. Include all the following engineering analysis, unless otherwise agreed to by BDE and FHWA:

    a. Existing Peak Hour Volumes. Provide a plan view map, with ramps and mainline through lanes labeled with Existing "AM Peak Hour" and "PM Peak Hour" volumes.

    b. Design Year No-Build Peak Hour Volumes. Provide a plan view map, with ramps and mainline through lanes labeled with the Design Year No-Build "AM Peak Hour" and "PM Peak Hour" volumes.

    c. Design Year Build Peak Hour Volumes. Provide a plan view map, with ramps and mainline through lanes labeled with the Design Year Build "AM Peak Hour" and "PM Peak Hour" volumes.

    d. Summary Of Operational Analysis. Preferably, provide a table listing the "Freeway LOS", "Ramp LOS", "Weave LOS", and "Non-Weave LOS" for the corresponding Existing AM/PM, Design Year "No-Build" AM/PM, and Design Year "Build" AM/PM for various on-ramps, off-ramps, and through lanes.

    e. Existing Peak Hour Levels of Service. Provide a plan view map, with ramps, mainline through lanes, and crossroads labeled with calculated Existing "AM Peak Hour Level of Service" values and "PM Peak Hour Level of Service" values.

    f. Design Year No-Build Peak Hour Levels of Service. Provide a plan view map, with ramps, mainline through lanes, and crossroads labeled with calculated Design Year No-Build "AM Peak Hour Level of Service" values and "PM Peak Hour Level of Service" values.

g. Design Year Build Peak Hour Levels of Service. Provide a plan view map, with ramps, mainline through lanes, and crossroads labeled with calculated Design Year Build "AM Peak Hour Level of Service" values and "PM Peak Hour Level of Service" values.

h. Basic Freeway Segments Analyses of Existing Conditions. Preferably, provide program outputs from the latest release of the *HCS* for all adjacent freeway segments.

i. Basic Freeway Segments Analyses of the Design Year "No-Build" Conditions. Preferably, provide program outputs from the latest release of the *HCS* for all adjacent freeway segments.

j. Basic Freeway Segments Analyses of the Design Year "Build" Conditions. Preferably, provide program outputs from the latest release of the *HCS* for all adjacent freeway segments.

k. Ramp Junction Analyses of the Existing Conditions. Preferably, provide program outputs from the latest release of the *HCS* for all ramp junctions.

l. Ramp Junction Analyses of the Design Year "No-Build" Conditions. Preferably, provide program outputs, including queue analysis, from the latest release of the *HCS* for all ramp junctions.

m. Ramp Junction Analyses of the Design Year "Build" Conditions. Preferably, provide program outputs, including queue analysis, from the latest release of the *HCS* for all ramp junctions.

n. Weave Area Analyses of the Existing Conditions. Preferably, provide program outputs from the latest release of the *HCS* for all weaving areas.

o. Weave Area Analyses of the Design Year "No-Build" Conditions. Preferably, provide program outputs from the latest release of the *HCS* for all weaving areas.

p. Weave Area Analyses of the Design Year "Build" Conditions. Preferably, provide program outputs from the latest release of the *HCS* for all weaving areas.

37-2 GENERAL DESIGN CONSIDERATIONS

37-2.01 Interchange Spacing

Where interchanges are spaced farther apart, freeway operations, level of service, and safety between connecting facilities are improved. Desirably, the spacing between interchanges on the average should not be less than 2 miles (3 km) in urban areas, 4 miles (6 km) in suburban areas, and 7.5 miles (12 km) in rural areas. These values allow adequate distances for an entering driver to adjust to the freeway environment, for proper weaving maneuvers between entrance and exit ramps, and for adequate signing distances. However, considering the effects of existing streets and highways, traffic operations, and social considerations, the spacing between adjacent interchanges may vary considerably. Therefore, the minimum distance between adjacent interchanges should not be less than 1 mile (1.5 km) in urban areas, 2 miles (3 km) in suburban areas, and 3 miles (5 km) in rural areas. In urban areas, a spacing of less then 1 mile (1.5 km) may be developed by using collector-distributor roads.

37-2.02 Basic Number of Lanes

The basic number of lanes is the minimum number of lanes designated and maintained over a significant length of a route based on the overall operational needs of that section. The number of lanes should remain constant over short distances. For example, do not drop a lane at the exit of a diamond interchange and then add it at the downstream entrance simply because the traffic volume decreases between the exit and entrance ramps. Likewise, do not drop a basic lane between closely spaced interchanges simply because the estimated traffic volume does not warrant the higher number of lanes. Lane drops should only occur where there is general lowering of the traffic volumes on the freeway route as a whole.

37-2.03 Lane Balance

Lane balance refers to certain principles that apply at freeway exits and entrances:

1. Exits. The number of approach lanes on the highway should equal the sum of the number of mainline lanes beyond the exit plus the number of exiting lanes minus one; see Figure 37-2A. An exception to this principle would be at cloverleaf loop ramp exits that follow a loop ramp entrance or at exits between closely spaced interchanges (e.g., interchanges where the distance between the taper end of the entrance terminal (1 ft (300 mm) stub) and the beginning taper (1 ft (300 mm) stub) of the exit terminal is less than 1500 ft (450 m) and a continuous auxiliary lane is used between the terminals). In these cases, the auxiliary lane may be dropped at a single-lane exit with the number of lanes on the approach roadway being equal to the number of through lanes beyond the exit plus the lane on the exit.

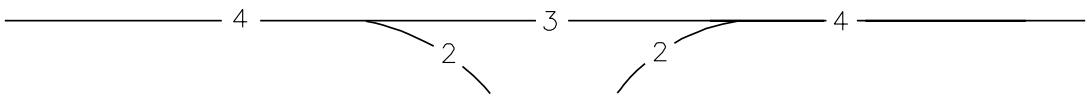

LANE BALANCE BUT NO COMPLIANCE WITH BASIC NUMBER OF LANES

-A-

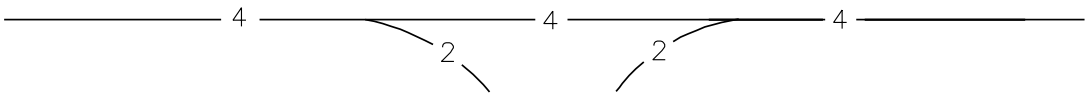

NO LANE BALANCE BUT COMPLIANCE WITH BASIC NUMBER OF LANES

-B-

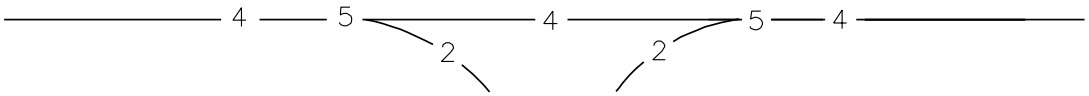

COMPLIANCE WITH BOTH LANE BALANCE AND BASIC NUMBER OF LANES

-C-

Where:

N_C = Number of Lanes for Combined Traffic

N_F = Number of Lanes on Freeway

N_E = Number of Lanes on Exit or Entrance Ramp

LANE BALANCE EQUATIONS

-D-

COORDINATION OF LANE BALANCE AND BASIC NUMBER OF LANES

Figure 37-2A

2. Entrances. At entrances, the number of lanes beyond the merging of the two traffic streams should be not less than the sum of the approaching lanes minus one; see Figure 37-2A.

3. Travel Lanes. Reduce the number of travel lanes on the freeway only one lane at a time.

For example, dropping two mainline lanes at a two-lane exit ramp would violate the principle of lane balance. One lane should provide the option of remaining on the freeway. Lane balance would also prohibit immediately merging both lanes of a two-lane entrance ramp into a highway mainline without the addition of at least one additional lane beyond the entrance ramp. Figure 37-2A illustrates how to coordinate lane balance and the basic number of lanes at an interchange. Figure 37-2A also illustrates how to achieve lane balance at the merging and diverging points of branch connections.

37-2.04 Capacity and Level of Service

The capacity of an interchange will depend upon the operation of its individual elements which include:

- basic freeway section where interchanges are not present,
- freeway ramp terminals,
- weaving areas,
- ramp proper,
- collector-distributor roadways, and
- ramp/crossroad intersections.

The basic capacity reference is the *Highway Capacity Manual* (HCM). The HCM and the *Highway Capacity Software* (HCS) provide the analytical tools required to analyze the level of service for each element listed above. Other capacity analysis programs and techniques may be used provided they are approved by BDE. To be eligible for approval, the output results of other programs and techniques must compare closely with the HCS.

Level of service values presented in Chapter 44 for freeways will also apply to interchanges. The level of service of each interchange element should be equal to the level of service provided on the basic freeway section. Individual elements should not operate at more than one level of service below that of the basic freeway section. In addition, the operation of the ramp/crossroad intersection in urban areas should not impair the operation of the mainline. This will likely involve a consideration of the operational characteristics on the minor road for some distance in either direction from the interchange. For most projects, the district geometrics engineer will be responsible for conducting or reviewing the capacity analysis at interchanges.

37-2.05 Auxiliary Lanes

As applied to interchange design, auxiliary lanes are most often used to comply with the principle of lane balance, to increase capacity, to accommodate weaving, or to accommodate entering and exiting vehicles. Operational efficiency of the freeway may be improved if a continuous auxiliary lane is provided between entrance and exit terminals where interchanges are closely spaced. An auxiliary lane may be dropped at an exit if properly signed and designed. The following statements apply to the use of an auxiliary lane within or between interchanges:

1. Within Interchange. Figure 37-2B provides the basic schematics of alternative designs for adding and dropping auxiliary lanes within interchanges. The selected design will depend upon traffic volumes for the exiting, entering, and through movements.

2. Between Interchanges. Where interchanges are closely spaced, the designer should provide an auxiliary lane where the distance between the taper end of the entrance terminal and beginning taper of the exit taper is less than 1500 ft (450 m). Figure 37-2C illustrates where an auxiliary lane is used between two closely spaced interchanges.

Auxiliary lane drops beyond the interchange may be merged approximately 2500 ft (750 m) beyond the influence of the last interchange. Design details for auxiliary lane drops beyond an interchange are provided in Chapter 44. Design details for dropping auxiliary lanes at exits or adding them at entrances are provided in Section 37-6. If the auxiliary lane is dropped at a single lane exit, a recovery area beyond the gore should be provided as shown in Figure 37-2B. Where certain sight distance restrictions are unavoidable (e.g., on structures), the recovery area should be extended 500 ft to 1000 ft (150 m to 300 m) downstream from the exit. This distance should be increased to 1500 ft (450 m) or more with complex designs.

37-2.06 Route Continuity

The major route should flow continuously through an interchange. For freeway and expressway routes that change direction, the driver should not be required to change lanes or exit to remain on the major route. Route continuity without a change in the basic number of lanes is consistent with driver expectancy, simplifies signing, and reduces the decision demands on the driver. Interchange configurations should not necessarily favor the heavier traffic movement. Other marked routes which turn or exit at an interchange can be accomplished by a single-lane ramp if capacity is adequate. If these ramps are longer than ½ mile (800 m), consider providing a two-lane ramp for better traffic operations.

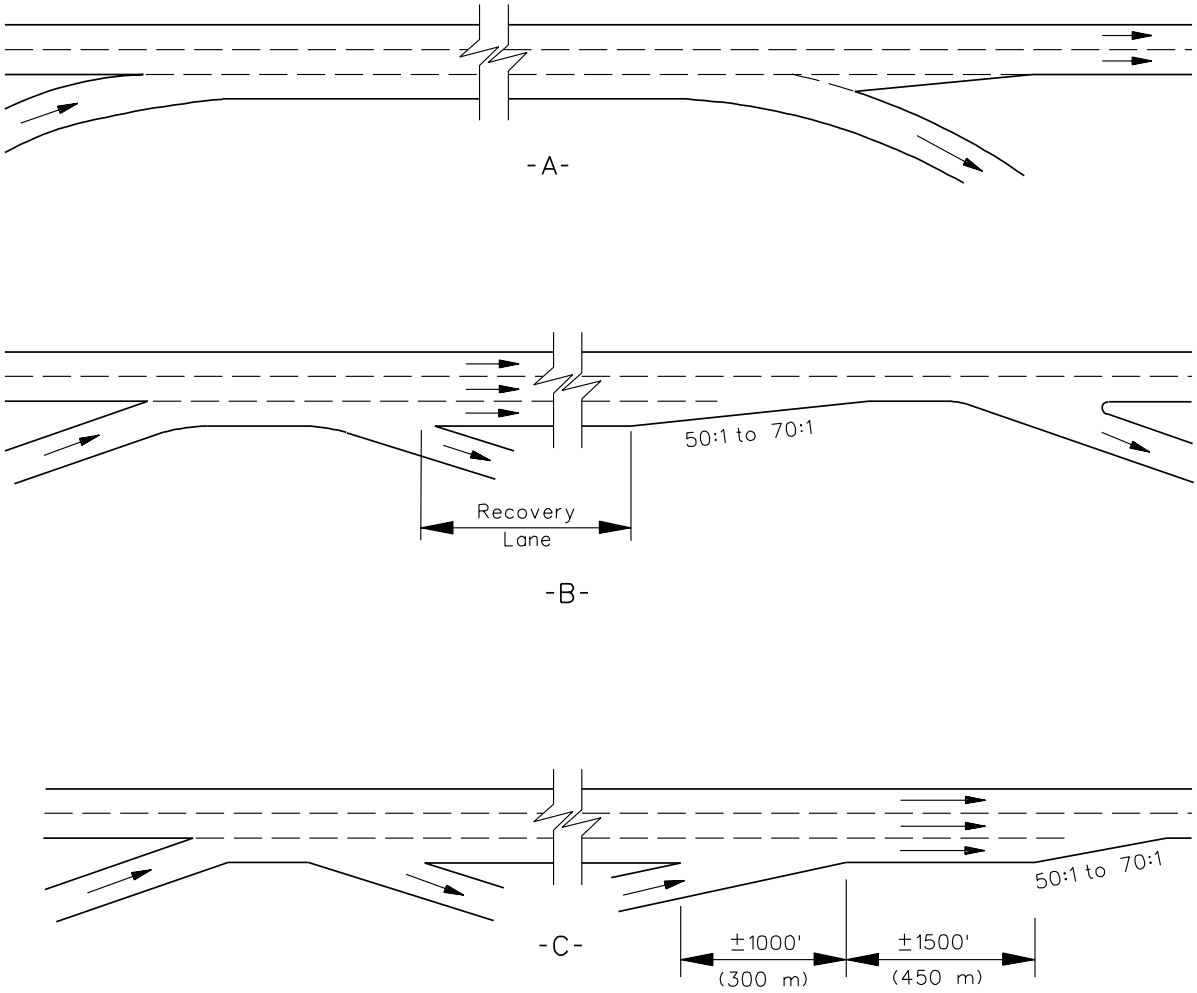

AUXILIARY LANES WITHIN AN INTERCHANGE
Figure 37-2B

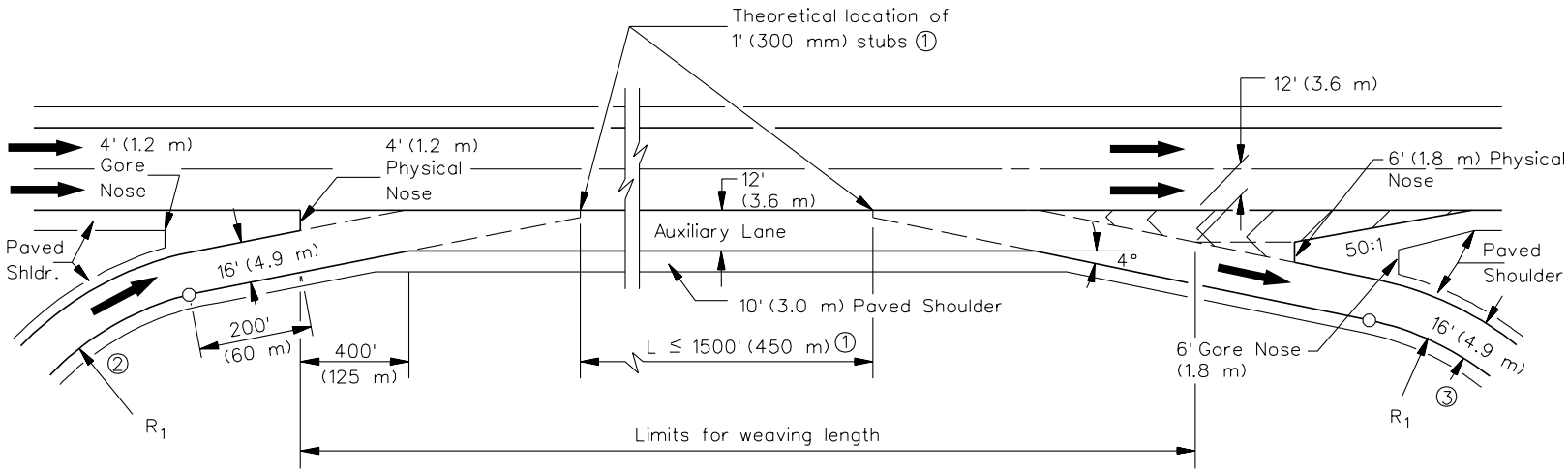

Notes:

1. *If the distance between the theoretical 1 ft (300 mm) stubs is less than or equal to 1500 ft (450 m), provide an auxiliary lane connecting the entrance terminal to the exit terminal even if the auxiliary lane would not be required by a weaving analysis.*

2. *See Figure 37-6L for Entrance Ramp Terminal with auxiliary lane.*

3. *See Figure 37-6B for Exit Terminal with auxiliary lane.*

AUXILIARY LANE BETWEEN TWO INTERCHANGES

Figure 37-2C

37-2.07 Uniformity

Interchange configurations should be uniform from one interchange to another. All ramps should exit and enter on the right except under highly unusual conditions. Dissimilar arrangements between interchanges can cause confusion resulting in undesirable lane switches, reduced speeds, etc., especially in urban areas where interchanges are closely spaced.

37-2.08 Left-Hand Ramps

Avoid the use of left-hand exit and entrance ramps. They are less efficient operationally than right-hand ramps and may present a serious crash potential. They also introduce an undesirable element of non-uniformity into the design of a freeway system which leads to confusion and, in some cases, hazardous behavior by drivers. The disadvantages of left-hand ramps greatly outweigh the potential for directional turning movements and the increased flexibility of design. Therefore, where a left-hand ramp is being considered, approval of the design and analysis must be obtained from BDE prior to the submittal of the Interchange Design Study (IDS).

37-2.09 Signing and Marking

Proper interchange operations depend partially on the compatibility between its geometric design and the traffic control devices at the interchange. The proper application of signs and pavement markings will increase the clarity of paths to be followed, safety, and operational efficiency. The logistics of signing along a highway segment will also impact the minimum acceptable spacing between adjacent interchanges. The Bureau of Operations' *Policies and Procedures Manual* provides guidelines and criteria for the placement of traffic control devices at interchanges. For complex interchanges and location/design studies involving closely spaced interchanges, a preliminary signing plan must be submitted with the IDS.

37-2.10 Ramp Metering

Ramp metering may be used to improve freeway operations. Ramp metering consists of traffic signals installed on entrance ramps before the entrance terminal to control the number of vehicles entering the freeway. The Bureau of Operations will determine the need for ramp metering. If ramp metering is used, the designer will need to coordinate with the Bureau of Operations to determine the placement of the ramp signal to ensure that there is sufficient storage area before the ramp signal and that sufficient acceleration distance is available beyond the signal to allow a vehicle to reach the freeway operating speed.

37-2.11 Weaving Sections

Weaving sections are highway segments where the pattern of traffic entering and exiting at contiguous points of access results in vehicular paths crossing each other. The turbulent effect of weaving operations can result in reduced operating speeds and levels of service for the through traffic. Weaving sections may be eliminated at an interchange between two major highways by using directional or semi-directional connections or by using collector-distributor roadways.

Consider the following for weaving sections:

1. Weave Length. Weaving sections on freeways other than cloverleafs should be at least 1000 ft (300 m) or the length determined using the *Highway Capacity Manual* (HCM), whichever is greater. Section 37-3.06(b) discusses the minimum design criteria for one-sided weaving sections at cloverleaf interchanges.

2. Level of Service. The level of service of a weaving section should be the same as the adjacent mainline; however, at a minimum, it can be one level lower. A higher volume in weaving sections may be accommodated and their adverse impact on through traffic minimized by providing the weaving section on collector-distributor roadways. Section 37-4.02 discusses the use and design of collector-distributor roadways.

37-2.12 Grading and Landscaping

Consider the grading around an interchange early in the design process. Alignment, fill and cut sections, median widths, lane widths, drainage, structural design, and infield contour grading, all affect the aesthetics of the interchange. Properly graded interchanges allow the overpassing structure to blend naturally into the terrain. In addition, ensure that the crossroad and ramp slopes are not too steep to compromise safety and that they can support plantings that prevent erosion and enhance the appearance of the area. Flatter slopes also allow easier maintenance. Transitional grading between cut and fill slopes should be long and natural in appearance. The designer must ensure that plantings will not affect the sight distance within the interchange and that larger plantings are a significant distance from the traveled way. See Chapter 59 for additional guidelines.

37-2.13 Review for Ease of Operation

Review the proposed design from the driver's perspective. Examine all possible movements that a motorist might encounter. Several computer programs are available that allow a designer to test drive the design. Review the plans for areas of possible confusion, sufficient weaving and sight distances, proper signing, and ease of operation.

37-2.14 Geometric Design Criteria

Design all roadways through an interchange with the same criteria as used for the approaches including design speed, sight distance, horizontal and vertical alignment, cross section, and roadside safety elements. The applicable chapters in Parts IV, Roadway Design Elements, and V, Design of Highway Types, present the geometric design criteria which apply to the roadways through interchanges. In addition, consider the following:

1. Functional Classification. Determine the crossroad functional classification using the criteria in Chapter 43.

2. Design Year. Typically, use a 20-year design period based on the anticipated opening date of the facility.

3. Design Speed. The crossroad design speed will be based on its functional classification and its urban or rural classification; see the geometric design tables in Part V, Design of Highway Types. For rural crossroads (e.g., county highways, township roads), the minimum design speed of the crossroad through the interchange should be 55 mph (90 km/h).

4. Horizontal Alignment. In general, lay out the alignment of the freeway/expressway and crossroad through the interchange on a tangent. Where this is not practical, consider the following:

    a. Freeway Mainline. Avoid curves to the left.

    b. Freeway Ramp Terminals. Lay out the freeway alignment so that only one exit terminal departs from the mainline curving to the right, or design the mainline curve to lie entirely within the limits of the interchange and away from the exit and entrance terminals.

    c. Superelevation. Desirably, lay out the horizontal alignment so that superelevation and superelevation transitions will not be required through the freeway ramp terminals or through the ramp/crossroad intersection.

    d. Crossroad. Where a curve is necessary, provide a significantly large horizontal curve so that superelevation is not required on the crossroad.

    e. Structures. For a freeway or expressway over a crossroad, place the PC or PT of the horizontal curve 400 ft (120 m) or more from the back of the bridge abutment.

5. Vertical Alignment. Vertical profiles for both roadways through the interchange should be as flat as practical. Where compromises are necessary, use the flatter grade on the major facility. In addition, the designer should consider the following:

a. Sight Distance. To improve the sight distance to exit gores, locate exit ramp terminals and major divergences where the mainline is on an upgrade.

b. Ramps. Avoid creating a hidden ramp roadway in the vertical plane. Also, provide flat approach grades adjacent to the crossroad. For additional information on storage platforms at the ramp/crossroad intersection, see Sections 36-1.06 and 37-5.01.

c. Exit Ramp Terminals. Where a freeway or expressway is proposed to cross over the crossroad, locate the exit ramp terminals on the mainline no closer than 1000 ft (300 m) from the high point of a crest vertical curve on the mainline. This will ensure that no hidden ramps exist and will provide for safer operations at the exit ramp terminal.

d. Turning Trucks. Large trucks may become unstable when executing a nonstop, left turn from a crossroad on a downgrade. The combination of a downgrade, sharp turning maneuvers into a ramp, and reverse superelevation may produce instability in large trucks. Therefore, the maximum grade for all crossroads associated with these conditions is desirably 2% through the ramp/crossroad terminal. For existing crossroads to remain in place, limit the downgrade to 3%. At a maximum, limit the up and downgrades to 4%.

6. Cross Sections. When designing the crossroad through the interchange, consider the following:

a. Widths. In general, carry the approach cross section of the major facility through the interchange. See Sections 37-5.01 and 37-5.02 for typical cross sections of a crossroad through an interchange.

b. Raised-Curb Medians. Raised-curb medians are used throughout the limits of the interchange. This facilitates the construction of separate left-turn lanes and promotes the proper use of the ramp/crossroad intersections. To determine the crossroad channelized approach in conjunction with the crossroad design speed and number of lanes on the crossroad, see the IDOT publication *Transitional Approaches to Channelized Intersections* for additional information. Chapter 36 also provides guidance on the design of channelized left-turn lanes and islands.

c. Side Slopes. Side slopes on the crossroad through the interchange area should be 1V:4H or flatter. Chapter 34 and Part V further discuss roadway side slopes.

7. Sight Distance. Because of the additional demand placed on the driver at an interchange, the designer should consider the following sight distance elements:

a. Stopping Sight Distance. Provide adequate stopping sight distance on both intersecting highways throughout the interchange and on all ramps. Check both

the vertical and horizontal alignment to ensure that the location of piers, abutments, structures, bridge rails, vertical curves, etc., will not restrict sight distance. Chapter 32 discusses the application of horizontal sight distance. Chapter 33 discusses the application of vertical sight distance.

b. Decision Sight Distance. Desirably, provide decision sight distance to all decision points (e.g., exit and entrance terminals). Driver expectancy should not be violated; see Chapter 31.

c. Intersection Sight Distance. Section 36-6 discusses intersection sight distance (ISD) which is also applicable at ramp/crossroad intersections (non-merging sites). Section 37-5.01 provides additional ISD guidance that should be considered at ramp/crossroad intersections that are stop controlled.

8. Ramp/Crossroad Intersections. When designing the ramp/crossroad intersection, consider the following:

a. Angle of Ramp Intersection. To determine the appropriate angle for the ramp/crossroad intersection, see Section 37-5.

b. Access Control. To determine the required length of access control along the crossroad at the interchange, see Chapter 35.

c. Left-Turn Lanes. Select the appropriate left-turn lane lengths based on the design speed of the crossroad and/or the required storage lengths; see Section 36-3.02. For guidance on the design of left-turn lanes across or under a structure, see Section 37-5.

d. Turning Movements. Check the ramp/crossroad intersection with the applicable design vehicle turning template or use a computer-simulated turning template program. As discussed in Section 36-1.08, use the WB-65 (WB-20) design vehicle at all ramp/crossroad intersections.

9. Mainline/Crossroad Point of Intersection. Once Items 1 through 8 above have been determined, the designer must decide where the mainline alignment best intersects with the crossroad. The overall size of the interchange, crossroad gradelines, required length of access control along the crossroad, access to property at the ends of access control on the crossroad, and topography are the most influential factors in this determination. Complete this investigation before the detailed design of an interchange is initiated.

10. Structures. Chapter 39 provides the geometric design criteria for structures designed in conjunction with interchanges.

11. Trucks. Check truck merging speeds at entrance terminals. This typically is only critical where the:

- mainline profile is on an upgrade of 3% or greater,
- the ramp profile is on a steep upgrade, and/or
- the mainline volume is heavy.

37-2.15 Operational/Safety Considerations

Operations and safety are important considerations in interchange design. The following summarizes several major considerations:

1. Exit Ramps. For exit ramps, consider the following:

   - Provide decision sight distance, where practical, to the freeway exit; see Chapter 31. Desirably, use the pavement surface for the height of object (i.e., 0.0 inches (0.0 mm)).

   - Ramps should depart from the mainline where there will be no vertical curvature to restrict visibility along the ramp. Avoid ramp designs that drop out of sight.

   - Avoid locating exit terminals where the mainline curves to the left.

   - Proper advance signing of exits is essential to allow necessary lane changes before the exit.

   - Provide sufficient distance to allow safe deceleration from the freeway design speed to the design speed of the first governing geometric feature on the ramp, typically a horizontal curve.

2. Entrance Ramps. Provide an acceleration distance of sufficient length to allow a vehicle to attain an appropriate speed for merging. Where entrance ramps enter the mainline on an upgrade, the acceleration distance may need to be lengthened, or an auxiliary lane may be required to allow vehicles to reach a safe speed prior to merging.

3. Driver Expectancy. Ensure that the interchange is designed to conform to the principles of driver expectation. These may include the following:

   - Avoid left-hand exit or entrance terminals. Drivers expect single-lane exit and entrance terminals to be located on the right side of the freeway.

   - Do not locate exit ramps so that it gives the appearance of a continuing mainline tangent as the mainline curves to the left.

- Do not mix operational patterns between interchanges, lane continuity, or interchange types.

- Provide lane balance and basic number of lanes on the freeway.

- Provide sufficient spacing between interchanges to allow proper signing distances to decision points.

4. Fixed-Objects. Because of traffic operations at interchanges, many fixed objects may be located within interchanges (e.g., signs at exit gores, bridge piers, rails). Avoid locating these objects near decision points, make them breakaway, or shield them with barriers or impact attenuators. Make any concrete footings flush with the ground line. See Chapter 38 for additional guidance on roadside safety.

5. Controlled Ramp Terminals. The designer must ensure that ramp/crossroad intersections have sufficient capacity so that the queuing traffic at the crossroad intersection does not backup onto the freeway. Also, sufficient access control and intersection sight distance must be maintained along the crossroad to allow the ramp intersection to work properly.

6. Wrong-Way Maneuvers. Provide channelized medians, islands, and adequate signing to minimize wrong-way possibilities. Avoid designs that may result in poor visibility, confusing ramp arrangements, or inadequate signing.

7. Weaving. Areas of vehicular weaving may create a high demand on driver skills and attentiveness. Where practical, design interchanges without weaving areas by changing the sequence of ramps, increasing the spacing between ramps, or removing the weaving areas from the highway mainline by using collector-distributor roads.

8. Pedestrians and Bicyclists. Use signing and lane markings to increase awareness of pedestrians and bicyclists. Signing, crosswalks, barriers, over and underpasses, bridge sidewalks, and other traffic control devices may be required to manage traffic movements and to control pedestrian and bicycle movements.

37-2.16 Distance Between Successive Freeway Ramp Terminals

Successive freeway ramp terminals may be placed relatively close to each other especially in urban areas. The distance between the terminals should provide for vehicular maneuvering, signing, and capacity. Figure 37-2D provides recommended guidelines for spacing distances of various freeway ramp terminals. The criteria in Figure 37-2D should be considered for the initial planning stages of interchange location. The final decision on the spacing between freeway ramp terminals must satisfy the level-of-service criteria. This will be determined by conducting a detailed capacity analysis using the *Highway Capacity Manual*. Where the distance between the tapers of successive entrance and exit terminals is less than 1500 ft (450 m), connect the two

terminals with an auxiliary lane and provide a recovery area beyond the exit terminal as illustrated in Figure 37-6B.

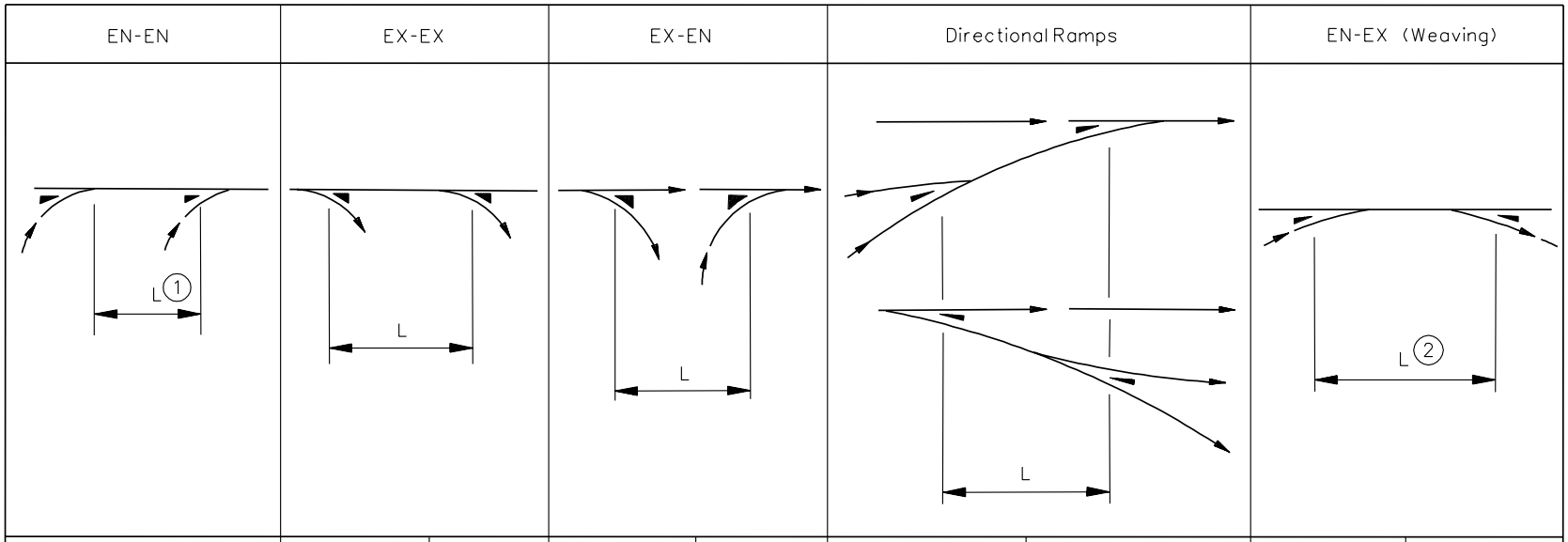

EN-EN	EX-EX		EX-EN		Directional Ramps		EN-EX (Weaving)			
Full Freeway CDR or FDR	Full Freeway	CDR or FDR	Full Freeway	CDR or FDR	System Interchange	Service Interchange	System to Service Interchange		Service to Service Interchange	
							Full Fwy.	CDR or FDR	Full Fwy.	CDR or FDR
Minimum Lengths (L) Measured Between Successive Ramp Terminals										
300 ft (100 m)	1000 ft (300 m)	800 ft (240 m)	500 ft (150 m)	400 ft (120 m)	800 ft (240 m)	600 ft (180 m)	2000 ft (600 m)	1600 ft (480 m)	1600 ft (480 m)	1000 ft (300 m)

FDR - Freeway Distributor Road CDR - Collector-Distributor Road EN - Entrance EX - Exit

Notes:

1. *Distance is measured from the end of taper (1 ft (300 mm) stub) to the gore nose and desirably should be 400 ft (120 m) or more; see Figure 37-6K.*
2. *For cloverleaf loop ramps, this distance is determined from Figure 37-3N and a weaving analysis.*
3. *The lengths are based on operational experience and the need for flexibility and adequate signing. They should be checked according to the procedure in the* Highway Capacity Manual. *The larger of the values is suggested for use. Also, a procedure for measuring the length of the weaving section is given in the* Highway Capacity Manual.

RAMP TERMINAL SPACING GUIDELINES

Figure 37-2D

37-3 INTERCHANGE TYPES AND LAYOUTS

37-3.01 General

In Illinois, there are six basic interchange types — the diamond, the cloverleaf, the partial cloverleaf, the trumpet, the directional, and the semi-directional. These interchange types, and variations within each type, permit adaptation to traffic needs, available right-of-way, terrain, and cultural features. The following sections discuss these basic interchange types and the design elements for laying out the interchange. Each interchange must be designed to fit the individual site considerations. The final design may be a minor or major modification of one of the basic types or may be a combination of two or more basic types. Sections 37-2, 37-4, 37-5, and 37-6 provide the general design criteria for the individual elements of the interchange.

37-3.02 Conventional Diamond

37-3.02(a) General

The conventional diamond is the simplest and most common interchange type. Diamonds include one-way diagonal ramps in each quadrant and two intersections at the crossroad. With proper treatments at the crossroad, the diamond interchange can accommodate a wide variety of circumstances in suburban and urban areas where the crossroad operating speeds are 45 mph (70 km/h) or less. The diamond is usually the best interchange choice where the intersecting road is not access controlled. Figures 37-3A and 37-3B illustrate typical diamond interchanges. Some of its advantages and disadvantages include:

Advantages

- All exits from the mainline occur before reaching the crossroad structure and entrances occur after the structure. This conforms to driver expectancy and therefore minimizes confusion.
- All traffic can enter and exit the mainline at relatively high speeds.
- At the crossroad, adequate sight distance can usually be provided, and the operational maneuvers are consistent with other intersections on the crossroad.
- Requires less right-of-way than other interchange types.
- The diamond configuration easily allows modifications to provide greater ramp capacity, if needed in the future.
- Their common usage has resulted in a high level of driver familiarity.
- Typically, it is the least expensive of all interchange types.

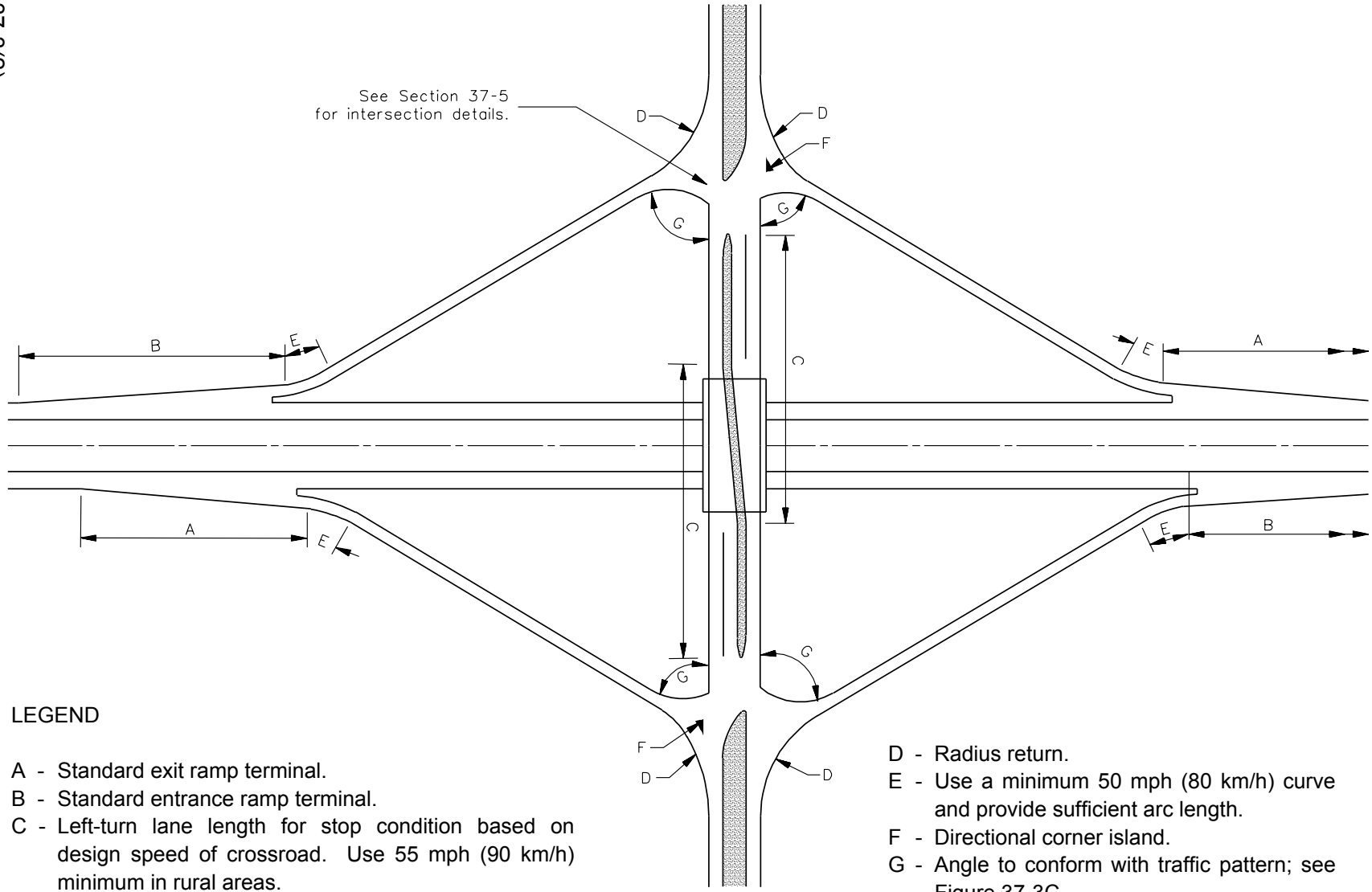

LEGEND

A - Standard exit ramp terminal.
B - Standard entrance ramp terminal.
C - Left-turn lane length for stop condition based on design speed of crossroad. Use 55 mph (90 km/h) minimum in rural areas.

D - Radius return.
E - Use a minimum 50 mph (80 km/h) curve and provide sufficient arc length.
F - Directional corner island.
G - Angle to conform with traffic pattern; see Figure 37-3C.

DIAMOND INTERCHANGE LAYOUT
(60° Design)

Figure 37-3A

LEGEND

A - Standard exit ramp terminal.
B - Standard entrance ramp terminal.
C - Left-turn lane length for stop condition based on design speed of crossroad. Use 55 mph (90 km/h) minimum in rural areas.
D - Radius return.

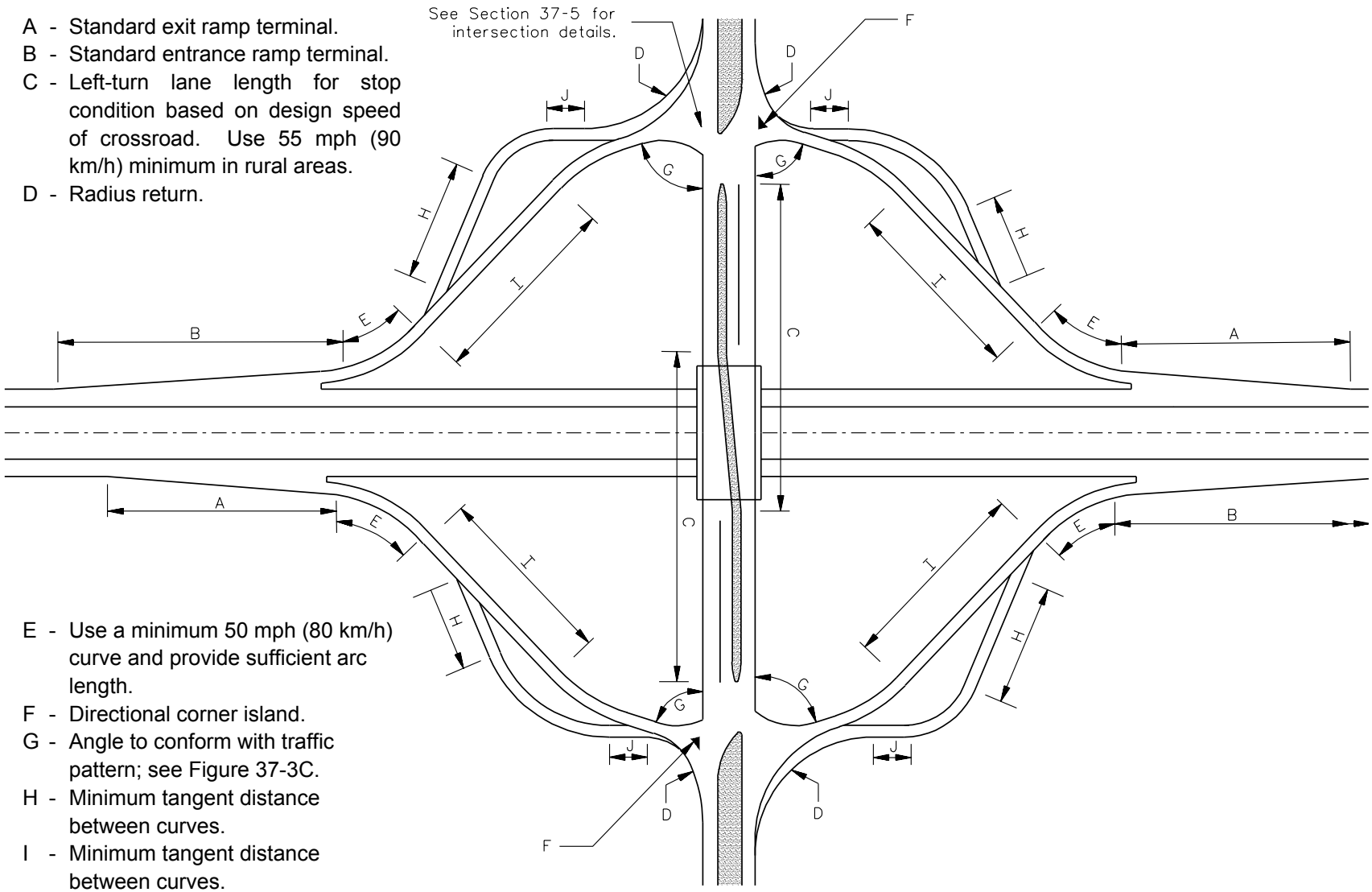

E - Use a minimum 50 mph (80 km/h) curve and provide sufficient arc length.
F - Directional corner island.
G - Angle to conform with traffic pattern; see Figure 37-3C.
H - Minimum tangent distance between curves.
I - Minimum tangent distance between curves.
J - Minimum 67% length of superelevation runoff. Tangent length must not overlap into radius return.

DIAMOND INTERCHANGE LAYOUT
(75° or 90° Design)

Figure 37-3B

Disadvantages

- Traffic is subject to stop-and-go operations rather than free flow.
- In suburban and urban areas, signalization is generally required at the crossroad intersections. These signals should be interconnected for progression.
- Requires right-of-way in all four quadrants of the interchange.
- A diamond has a greater potential for wrong-way entry onto the ramps than, for example, a full cloverleaf. Raised-curb channelization is used on the crossroad to minimize the likelihood of driver confusion and wrong-way maneuvers.

37-3.02(b) Left-Turn Lanes

The first step in laying out diamond interchange ramps is to determine the location of the ramp/crossroad intersections. The length of the overlapping left-turn lanes generally will determine the location of these intersections; see Figure 37-5A. Section 36-3.02 provides the criteria for determining the length for these separate left-turn lanes. Once the lengths are determined and located away from the grade separation, set the left-turn control radii and establish the baseline control; see Figures 37-5D through 37-5G.

37-3.02(c) Ramp/Crossroad Intersections

Figures 37-5D through 37-5G illustrate typical diamond ramp/crossroad intersections. Figure 37-3C provides guidelines for determining the preferred ramp/crossroad intersection angles where the crossroad is approximately perpendicular to the freeway. The ramp angles in Figure 37-3C are based on the volume of left-turning vehicles from either the crossroad or ramp. Once the ramp angle is selected, set the left edge of the ramp tangent to the left-turn control radii.

37-3.02(d) Ramp Layout

Although the angle of ramp intersection with the crossroad is important, the complete development of ramp geometry may be influenced by a combination of other factors (e.g., conservation of agricultural land, avoiding existing development, angle of intersection of the crossroad with the freeway). Because the angle of the crossroad with the freeway is a major factor in determining the ramp alignment and length, the following design considerations are provided:

1. Freeway and Crossroad — Perpendicular. Where the crossroad is approximately perpendicular to the freeway, consider the following guidelines:

a. Angle of Intersection. Figure 37-3C provides the preferred ramp intersection angles with the crossroad. These angles are based on the number of left-turning vehicles on either the crossroad or the exit ramp.

b. Number of Curves. With a 60° intersection angle, only one curve is required on the ramp; see Figure 37-3A. For other angles of intersection, a second curve adjacent to the crossroad will generally be required. For rural ramps with a 75° intersection angle with the crossroad, design the ramp curve nearest to the crossroad with a minimum 30 mph (50 km/h) design speed and, desirably, with a 40 mph (60 km/h) design speed. In urban areas, the design speed should be at least 25 mph (40 km/h) unless available right-of-way is highly restricted by existing development; see Figure 37-3B.

c. Minimum Tangent Length. The minimum tangent length between two reverse curves should be $(2/3T_1 + 2/3T_2)$. T_1 and T_2 are the individual superelevation runoff lengths for each curve. See Figure 37-4F for the applicable runoff lengths.

d. Curve Locations. Where two curves are designed on an exit ramp, the curve nearest the freeway ramp terminal may be located by computing the center-to-center distance of the two curves. This center-to-center distance, "L," passes through a point of intersection with a line drawn parallel to the edge of the freeway and passing through the center of the curve located next to the freeway. This procedure is illustrated in Figure 37-3D.

2. Freeway and Crossroad — Skewed. If the crossroad is skewed, in either direction, strict adherence to the guidelines for perpendicular intersections in Item 1 can result in unacceptable design features (e.g., excessive ramp lengths, short curve lengths, steep grades, indirect alignment). Therefore, design modifications are generally necessary. Under these conditions, give primary consideration to the ramp alignment rather than the intersection angle as determined from Figure 37-3C. With skewed crossroads, the ramp alignment should be, in order of preference, one of the following:

Left-Turn DHV at Ramp/Crossroad Intersection	Preferred Ramp/Crossroad Intersection Angle
125 or less	60°
125 - 250	75°
250 or more	90°

Note: This figure assumes the freeway and crossroad intersect at approximately 90°.

RAMP/CROSSROAD INTERSECTION ANGLES
Figure 37-3C

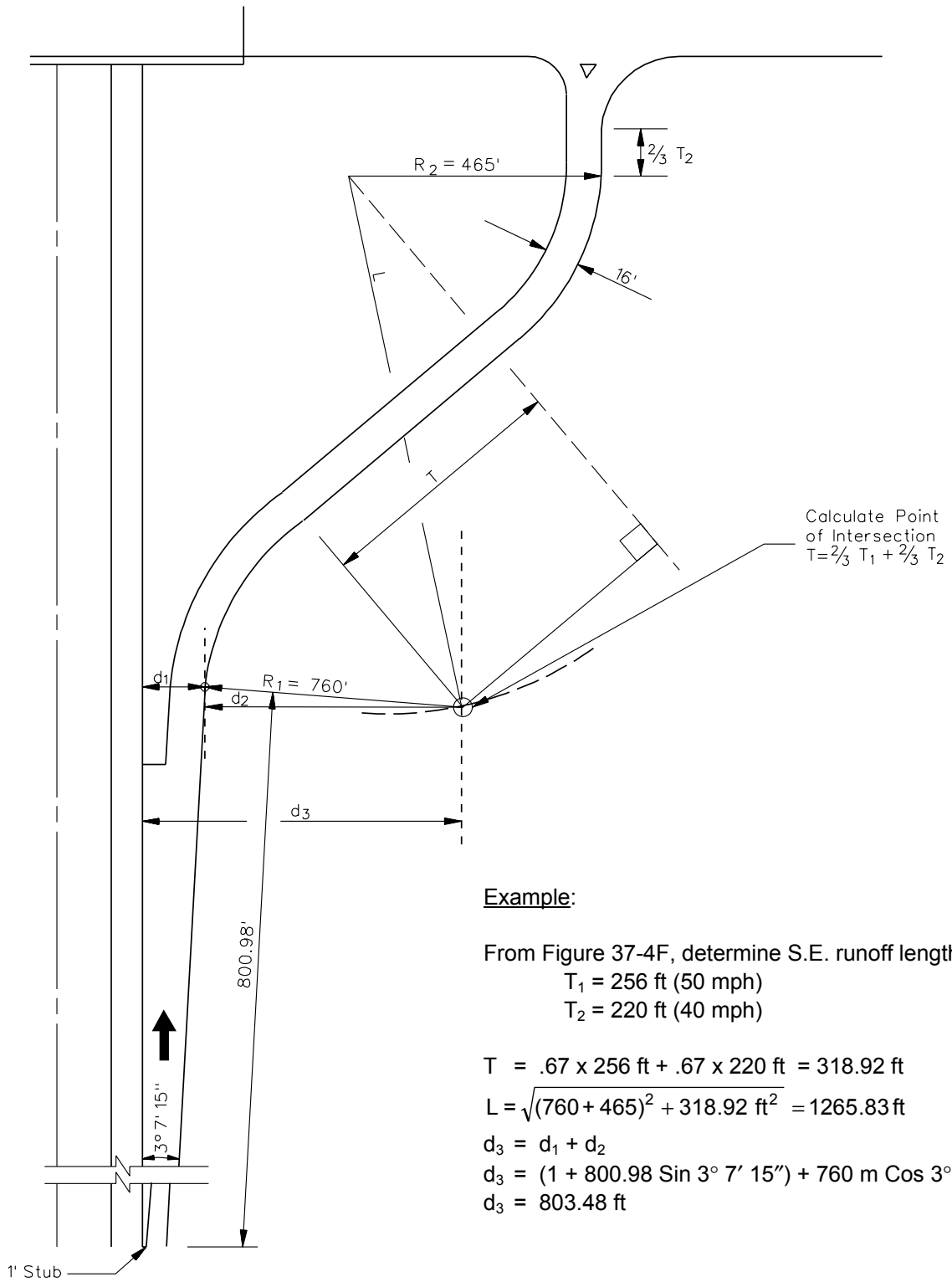

Example:

From Figure 37-4F, determine S.E. runoff length.

T_1 = 256 ft (50 mph)

T_2 = 220 ft (40 mph)

T = .67 x 256 ft + .67 x 220 ft = 318.92 ft

$$L = \sqrt{(760 + 465)^2 + 318.92\ ft^2} = 1265.83\ ft$$

$d_3 = d_1 + d_2$

d_3 = (1 + 800.98 Sin 3° 7′ 15″) + 760 m Cos 3° 7′ 15″

d_3 = 803.48 ft

LOCATION OF INITIAL CURVE FOR AN EXIT RAMP
(Diamond Interchange)

Figure 37-3D

- a tangent ramp with a single curve adjacent to the freeway;
- reverse curves with radii connected by a tangent length greater than the minimum required for superelevation runoff lengths, see Item 1c above; or
- reverse curves with radii connected by a tangent equal to the minimum superelevation runoff needs, see Item 1c above.

In the design of the preferred alignment, the designer must also control the overall ramp length. Normally, the gore nose of a ramp should be located about 1250 ft (375 m) from the crossroad structure. If the first preference alignment cannot be developed with a gore within 1250 ft to 1400 ft (375 m to 425 m) of the structure, the second preference should be investigated and the third, if necessary, until an acceptable ramp length is achieved for both grade and directness.

37-3.03 Modified Diamond

The modified diamond interchange is a combination of the diamond interchange and partial cloverleaf. Figure 37-3E illustrates typical schematics of a modified diamond interchange. This design type is typically used where subdivisions, extensive commercial or industrial development, lakes, ponds, or other adverse topography and/or soil conditions are located in one of the interchange quadrants, making right-of-way acquisition, design, or construction unusually expensive. Some of the advantages and disadvantages of the modified diamond include:

Advantages

- Depending upon site conditions, modified diamonds may offer the opportunity to increase weaving distances.
- It allows access where one of the quadrants presents adverse right-of-way, topography, or environmental constraints.
- It can be used where a full parclo is not desirable.

Disadvantages

- Modified diamonds may be more expensive than a conventional diamond interchange due to longer ramp lengths and wider structures.
- The loop results in a longer travel distance for the turning vehicle than for a conventional diamond, and the operating speeds on the loop ramp are generally slower.

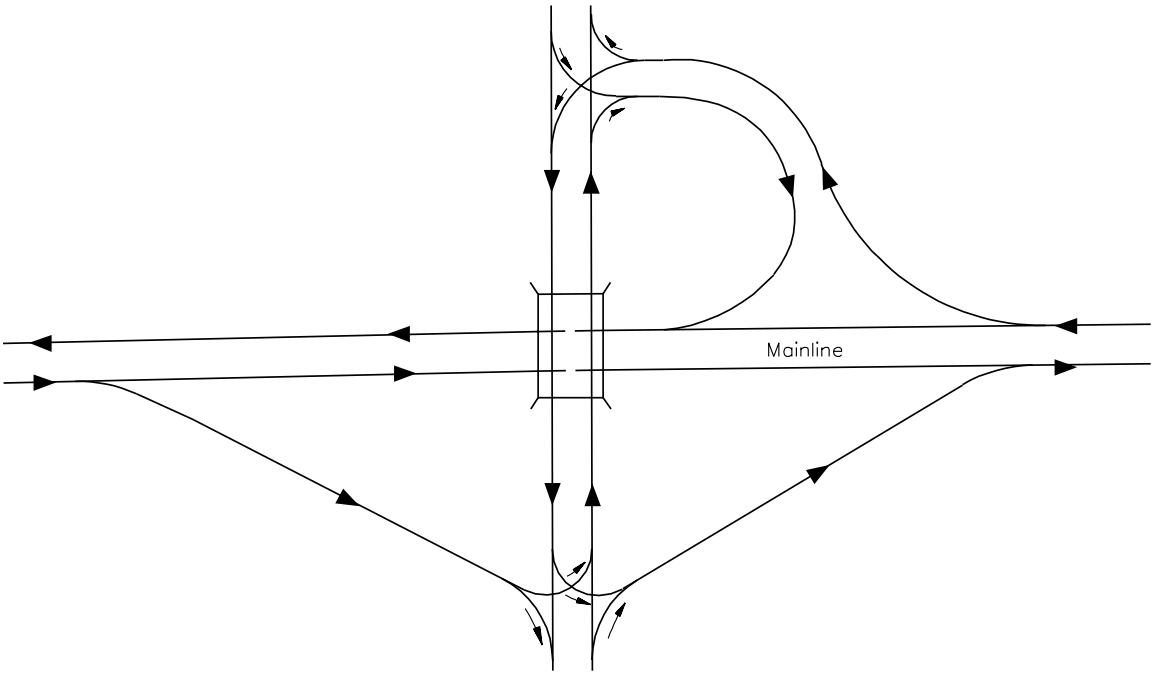

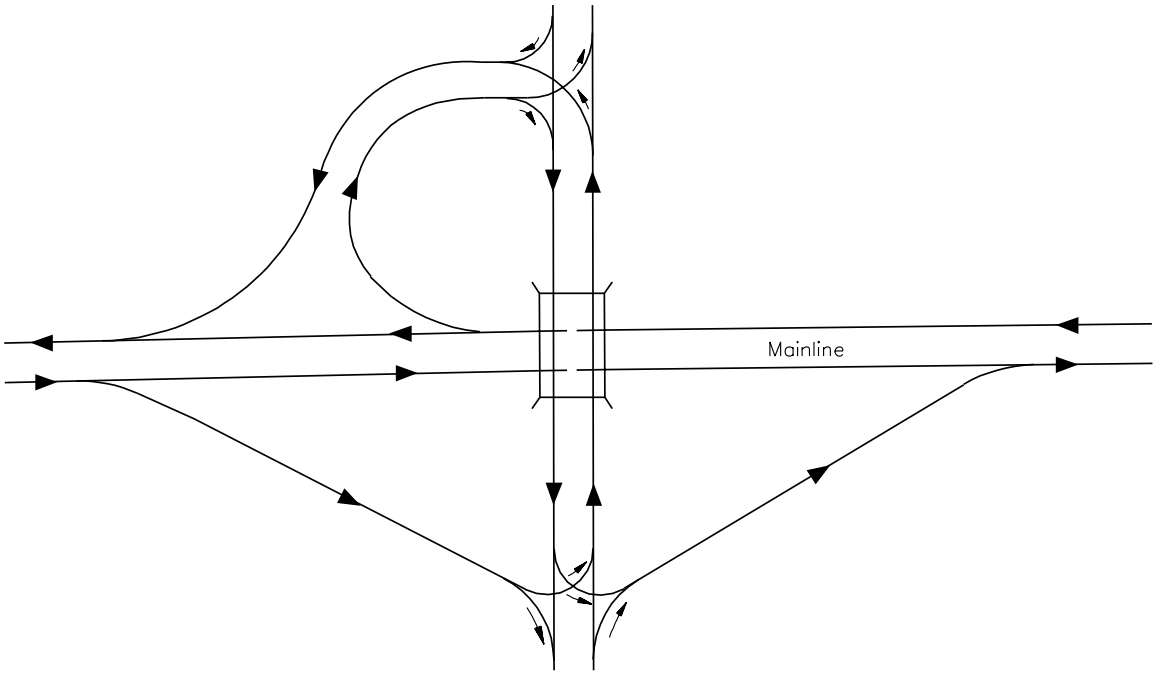

MODIFIED DIAMOND INTERCHANGE

Figure 37-3E

- The exit or entrance terminal is located before or after the crossroad structure which may require additional signing to guide the motorist.

37-3.04 Compressed Diamond

37-3.04(a) General

A compressed diamond, also called a tight diamond interchange, is similar to the conventional diamond except that the ramp termini on the crossroad are located near the structure. Figure 37-3F presents a schematic of a compressed diamond interchange without frontage roads. This design type is generally only used in urban areas where a diamond interchange is appropriate but right-of-way or other environmental features preclude the use of the conventional diamond. Although operationally a compressed diamond is similar to a single-point diamond discussed in Section 37-3.05, they have significant differences. Some of the advantages and disadvantages of the compressed diamond include:

Advantages

- Less right-of-way is required than that for a conventional diamond.
- The open pavement area at the intersection is significantly less than that for a single point diamond.
- The grade separation structure is significantly smaller than that for a single-point diamond, retaining walls and/or embankments are less expensive, and construction costs are lower.
- The ramp/crossroads intersections operate as two typical intersections, similar to a conventional diamond and, therefore, are less confusing to drivers.

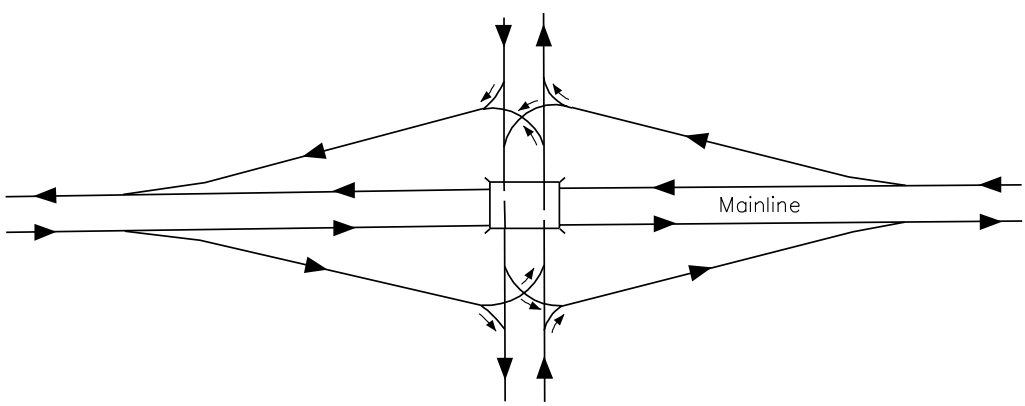

COMPRESSED DIAMOND INTERCHANGE

Figure 37-3F

- Slip ramps for one-way frontage roads can be easily incorporated into the design.

Disadvantages

- Left-turn lanes between the ramp termini usually need to be overlapped (i.e., side-by-side opposing left-turn lanes). Consequently, the cross section of the crossroad is generally wider than a conventional diamond.

- Signal timing and interconnection are necessary in order to eliminate left-turn queues from overlapping each other and causing gridlock.

- Due to the close proximity of the two intersections, the compressed diamond typically will need to operate as a six-phase overlap signal system. Consequently, longer clearance times are required.

- Length of access control on the crossroad may be more extensive than that for a conventional diamond.

37-3.04(b) Ramp/Crossroad Intersections

Section 37-5 presents the criteria for ramp/crossroad intersections which is also applicable to compressed diamonds. However, the minimum length for left-turn lanes is based on the storage length and not on the deceleration distance. See Section 36-3.02 to determine the minimum storage length. If there is insignificant space for storage, the designer will need to consider optimizing the traffic signals.

Figure 37-3F illustrates a schematic of a compressed diamond without frontage roads. Figure 37-5M presents the criteria for a compressed diamond with one-way frontage roads and slip ramps. Where there are one-way frontage roads and where there is significant U-turn traffic to the opposite frontage road, the designer may want to consider using a turnaround design. Figure 37-3G illustrates the general layout and cross section for a turnaround design. Depending upon specific site conditions, this arrangement may significantly improve traffic operations at the interchange. The major operational feature of the turnaround is to provide access for traffic on the freeway to the one-way frontage road in the opposite direction without passing through the two intersections on the crossroad. If U-turn movements are considered to be significant, prepare an origin and destination study to determine the need for a turnaround prior to the development of IDS.

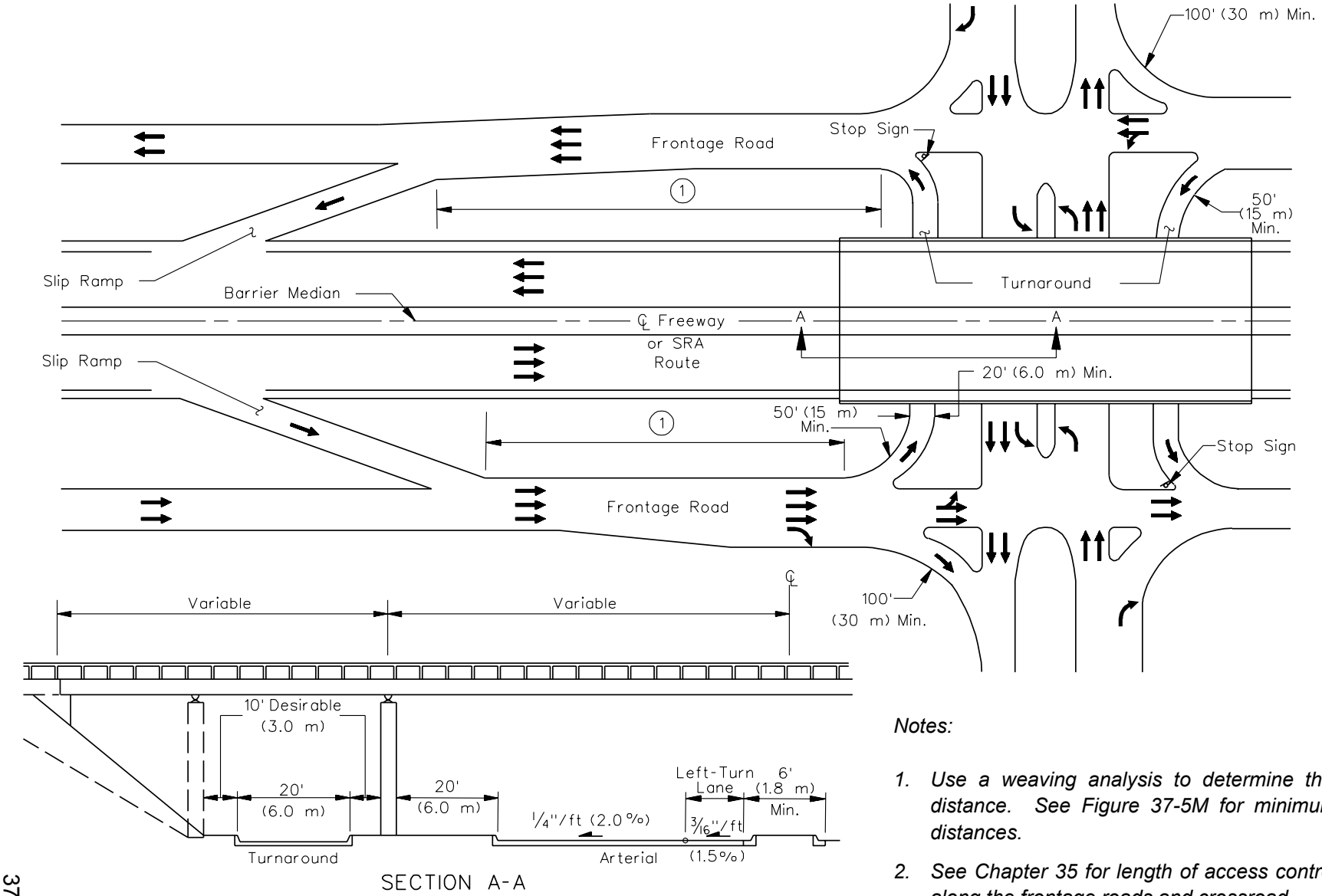

Notes:

1. *Use a weaving analysis to determine this distance. See Figure 37-5M for minimum distances.*
2. *See Chapter 35 for length of access control along the frontage roads and crossroad.*

COMPRESSED DIAMOND WITH TURNAROUND

Figure 37-3G

Some advantages and disadvantages of the turnaround design are as follows:

Advantages

- It preserves and enhances the accessibility to property abutting one-way frontage roads.
- U-turning vehicles do not have to pass through the two intersections on the crossroad.
- The capacity of the crossroad intersections is improved.

Disadvantages

- It is more costly than a typical compressed diamond due to the longer structure.
- It may be confusing to non-repeat drivers because it violates driver expectancy (i.e., driving to the left of the oncoming traffic).
- Longer distances are required between the slip ramp frontage road merge point and the crossroad.

37-3.05 Single-Point Urban Diamond

37-3.05(a) General

The single-point urban diamond interchange (SPUI) offers improved traffic-carrying capabilities, safer operations, and reduced right-of-way needs under certain conditions when compared with other interchange configurations. The distinguishing feature of this interchange is the convergence of all through and left-turning movements into a single, large signalized intersection area. Figure 37-3H illustrates a schematic of a SPUI. Some of its advantages and disadvantages include:

Advantages

- Only requires one intersection instead of two intersections at a typical diamond.
- Allows for better traffic signal progression on the crossroad.
- It can increase interchange capacity and alleviate storage problems from two closely spaced intersections on the crossroad.
- Opposing left turns operate to the left of each other so that their paths do not cross each other.
- Less right-of-way is required than any other interchange type.

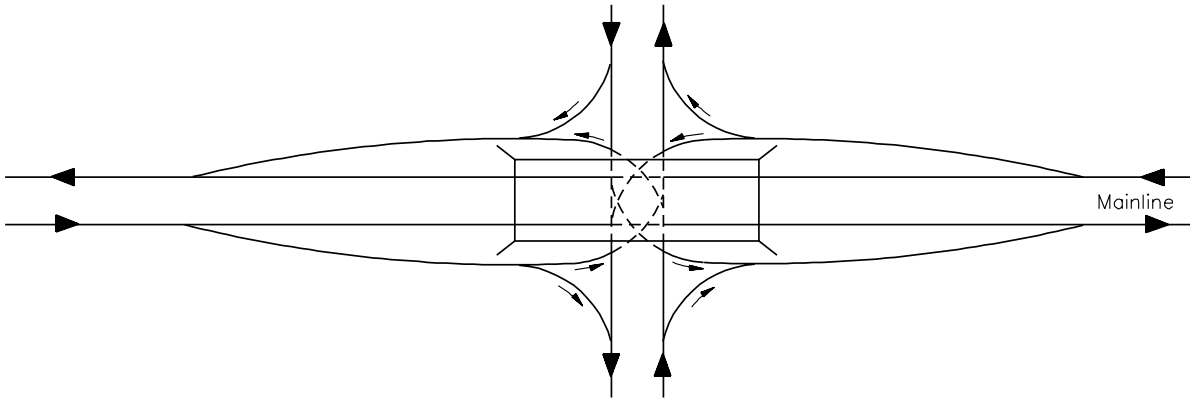

SINGLE-POINT URBAN DIAMOND INTERCHANGE
Figure 37-3H

- At the intersection of the ramps with the crossroad, the design typically includes, flatter curves for turning radii which allows left turns to be completed at higher speeds.

Disadvantages

- Special pavement markings and a centrally located diamond-shaped island are required to guide the left-turning drivers through the intersection.
- There is a significantly wider pavement area for pedestrians to cross and may create greater delays in traffic when compared to the conventional diamond.
- Because of wide pavement areas, it requires longer signal clearance times.
- It has a higher cost than the conventional or compressed diamond because of the need for a long, single-span structure and the need for retaining walls or reinforced earth walls along the mainline.
- In the case of the mainline over a crossroad, lighting is required under the structure.

37-3.05(b) Design Considerations

The interrelationship of the design elements is extremely important in the design of single-point diamond interchanges (SPUI). Therefore, every effort should be made to use the desirable values for all design features of the interchange. See NCHRP 345 *Single-Point Urban Interchange Design and Operational Analysis* for complete design details. Figures 37-3I and 37-3J illustrate the typical layout for a SPUI. In addition, consider the following:

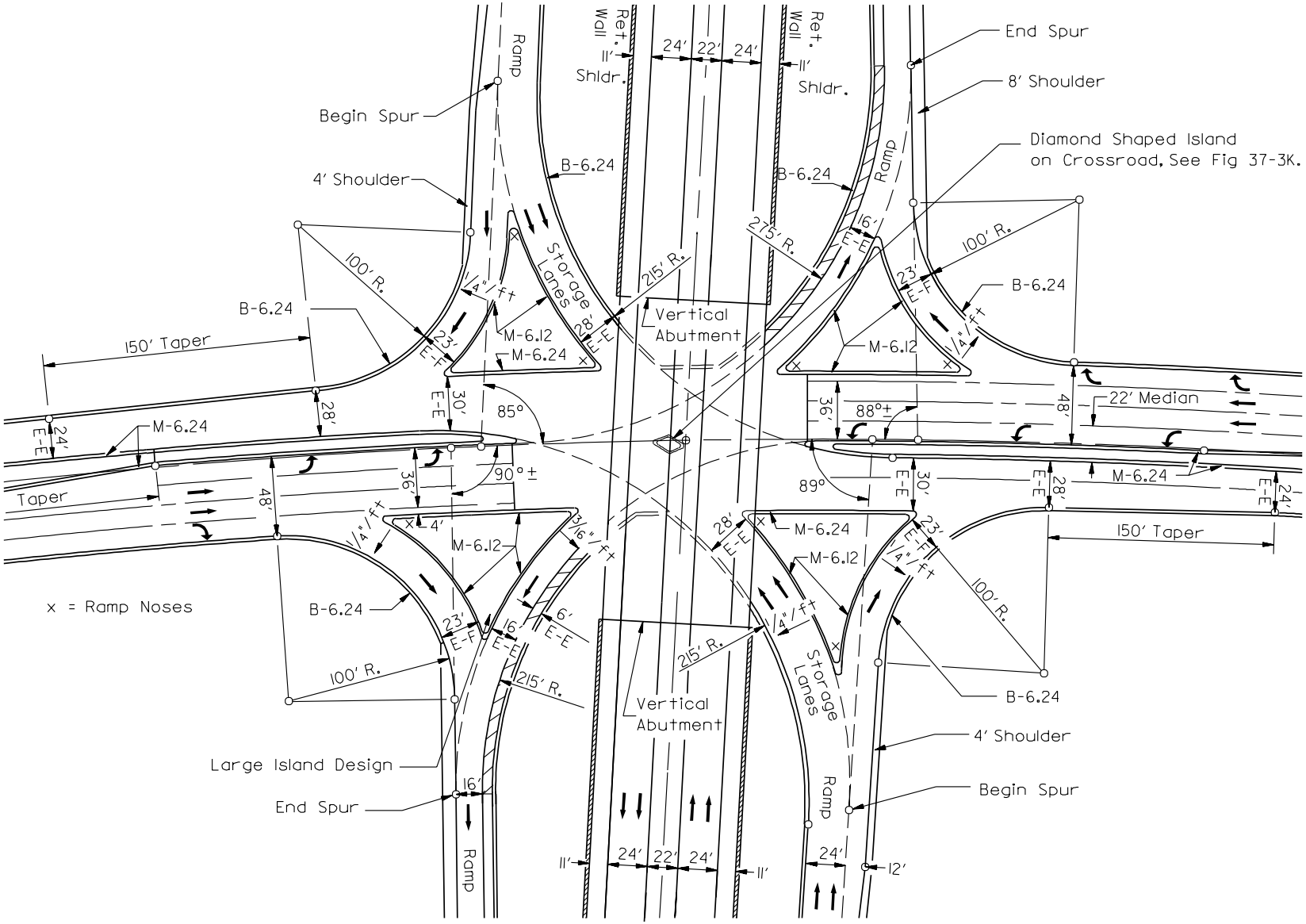

SINGLE-POINT URBAN DIAMOND INTERCHANGE
(Example of Central Intersection Details)

Figure 37-3I

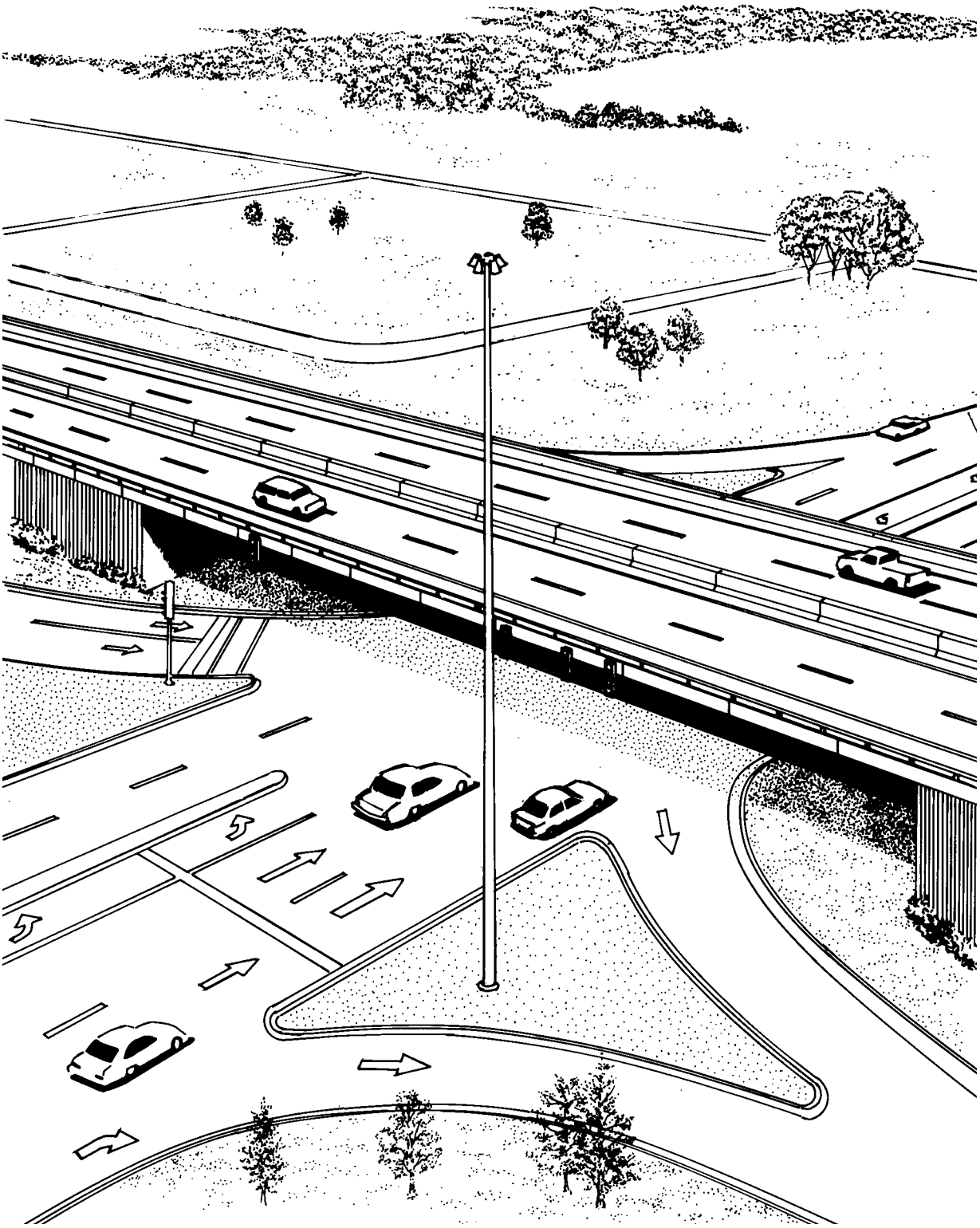

PERSPECTIVE VIEW OF SINGLE-POINT URBAN DIAMOND INTERCHANGE

Figure 37-3J

1. Over versus Under. One of the first things the designer must address is whether to place the freeway or expressway over or under the crossroad. The overpass SPUI, illustrated in Figure 37-3I, typically includes a conventional, single-span structure 220 ft (67 m) in length with a depth of 8 ft to 9 ft (2.4 m to 2.7 m). The underpass design (freeway over) typically includes two spans of approximately 65 ft (20 m) in length and a depth of 3 ft to 4 ft (1.0 m to 1.2 m). The underpass design tends to provide a more open and less restrictive feeling as the driver approaches the intersection area. For both designs, the crossroad profile should be flat as practical. Section 44-4.02 discusses additional considerations when determining whether to place the crossroad over or under the freeway.

2. Sight Distance. Sight distance along the exit ramp to the crossroad intersection is especially critical with the SPUI because the decision point to turn left or right generally will occur sooner at a SPUI than at other diamond type interchanges. The point of initial driver perception of the large triangular intersection island and the point for the left- or right-turn decision should occur at or just beyond the gore nose of the off ramp. At a minimum, provide the stopping sight distance as discussed in Section 31-3.01 and, desirably, decision sight distance wherever practical (Section 31-3.02). The designer must also check the horizontal sight distance to ensure that the sight distance is not blocked by the structure abutments or parapet walls.

3. Intersection Sight Distance. Provide adequate intersection sight distance as discussed in Section 36-6. The designer must check both the vertical and horizontal planes to ensure that adequate intersection sight distance is available. The profile of the crossroad should be flat to allow motorists to see the entire crossroad surface and all ramps in one view.

4. Design Speed. Desirably, the design speed for the turns should be 30 mph to 40 mph (50 km/h to 60 km/h). In highly restricted ROW areas, the left-turning roadway from the exit ramp onto the crossroad may be designed with a 25 mph (40 km/h) design speed.

5. Horizontal Alignment. One benefit of the SPUI is it provides high-speed, left-turning roadways in comparison to the compressed diamond interchange design. Design the left-turning roadways with 2% superelevation and radii between 200 ft and 400 ft (60 m and 120 m). See Figure 48-5B to determine radii for other design speeds.

6. Number of Lanes. A capacity analysis is required to determine the number of turn lanes for the overall intersection design. At a minimum, provide sufficient space to allow two through lanes for each direction on the crossroad, one left-turn lane on the crossroad, dual-turn lanes on the exit ramp for left-turning movements, and one right-turn lane from the exit ramp onto the crossroad.

7. Intersection Angle. The intersection angle should be approximately 90°.

8. Median Design. Crossroad medians should be in the range of 18 ft to 30 ft (5.5 m to 9.5 m) wide and with sufficient distance provided for left-turn storage in the median.

9. Central Island. Figure 37-3K illustrates the central island that should be used on the crossroad.

10. Offset Turning Movements. To allow ease of movements for left-turns, the separation between opposing left-turning vehicles on the crossroad should be at least 10 ft (3.0 m).

11. Right-Turn Lanes. Ensure the right-turn lanes on the exit ramps are of sufficient length to allow right-turning vehicles to bypass the queue of left-turning vehicles on the ramp.

12. Traffic Control Devices. To eliminate confusion at the SPUI, proper exit ramp guide signing, pavement markings, and lane-use signing must be included to provide the necessary positive guidance through the intersection. Contact the Bureau of Operations for the applicable signing and pavement marking criteria.

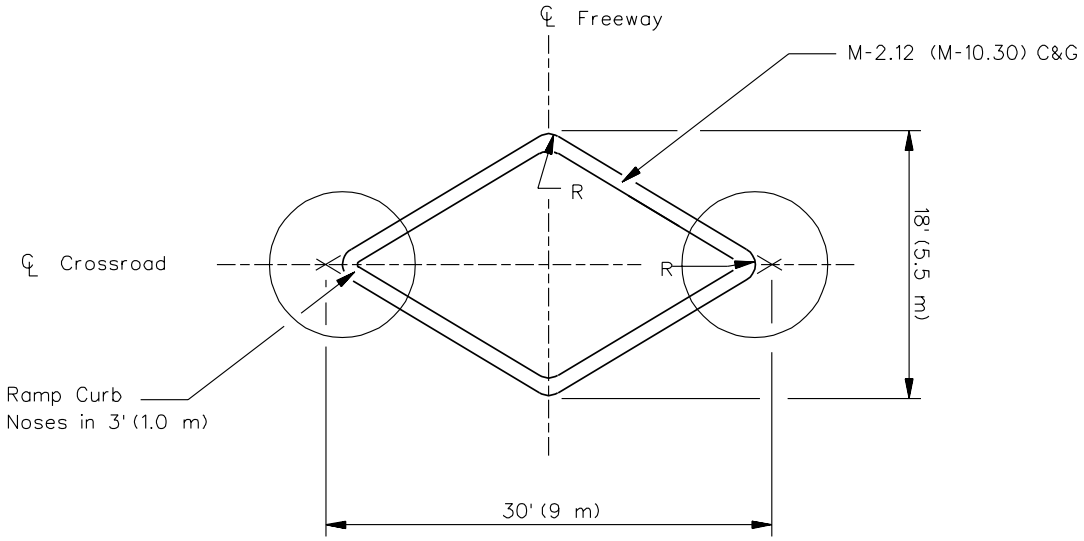

Note: R = 3 ft (1.0 m) to edge of pavement.

DIAMOND ISLAND ON CROSSROAD
(Single-Point Urban Diamond Interchange)

Figure 37-3K

13. Traffic Signal Placement. When determining signal locations, consider the following:

- Due to possible lane confusion, mount signal heads directly over the travel lanes.
- For overpass SPUI's, mount vertical signal heads outside the structure; see Figure 37-3J.
- The visibility of the signal heads controlling the exit-ramp left-turning movements is critical. An additional signal for advance notice may be required within the large triangular island.
- A "pull-through" signal on the opposite island may be required where travel distances through the intersection are relatively long.
- Contact the Bureau of Operations for the design of all signal installations.

37-3.06 Full Cloverleafs

37-3.06(a) General

Cloverleaf interchanges are used at four-leg intersections and employ loop ramps to accommodate left-turn movements. Full cloverleaf interchanges are those with loops in all four quadrants; all others are partial cloverleafs and are discussed in Section 37-3.07.

Where two access-controlled highways intersect, a full cloverleaf is the minimum type of interchange design that will suffice. In addition, they also may be used at the intersection of other multilane arterials to accommodate large volumes of traffic.

The operation of a cloverleaf with high weaving volumes is greatly improved through the addition of collector-distributor (C-D) roadways; see Section 37-4.02. The C-D roadways may be advantageous in suburban areas because of the need for smaller loops. This may reduce the amount of right-of-way acquisition necessary for the development of the interchange. Although right-of-way requirements may be reduced, overall costs usually increase due to longer and wider structures and additional pavement costs.

Figure 37-3L provides typical examples of full cloverleafs with and without C-D roads.

Some of the advantages and disadvantages of full cloverleafs include:

Advantages

- Full cloverleafs eliminate all vehicular stops through the use of free-flow terminals and they provide continuous free-flow operation on both intersecting highways.

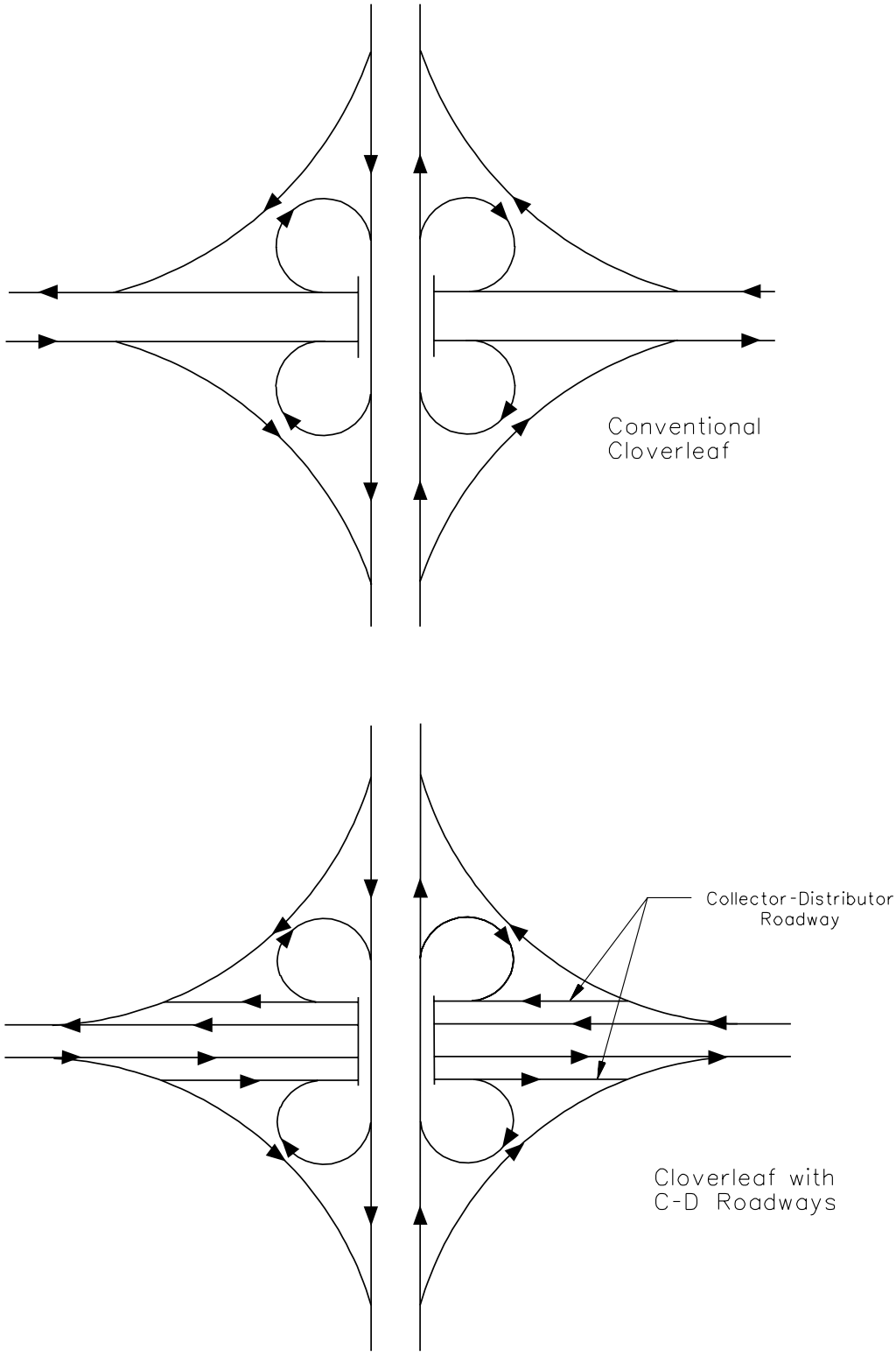

CLOVERLEAF INTERCHANGES

Figure 37-3L

- Full cloverleafs eliminate all at-grade intersections, eliminate left turns across traffic and, therefore, eliminate the need for traffic signals.

Disadvantages

- Because of the geometric design of loops, full cloverleafs require large amounts of right-of-way.

- They are typically more expensive than diamond interchanges due to considerably more lengths of ramps, wider structures, and the desirability of providing C-D roads.

- The loops in cloverleafs result in a greater travel distance for left-turning vehicles than do diamonds and the speeds on the ramps are generally slower.

- Exit and entrance terminals are located before and after the crossroad structure which require additional signing to guide motorists.

- Weaving sections between loop ramps must be made long enough to provide for satisfactory traffic operations.

- Where the crossroad is an expressway or other multilane highway, considerable length of access control distance is needed along the crossroad to the first point of access.

37-3.06(b) Design Considerations

Figure 37-3M illustrates the design and layout of a typical cloverleaf interchange. In developing the cloverleaf interchange, consider the following steps:

1. Exit Gore. The first step is to locate the physical nose of the exit gore of the weaving section a minimum of three seconds of travel time at the design speed beyond the structure on each of the four interchange legs; see Figures 37-3N.

2. Weaving Section. The second step is to determine the minimum lengths required for the weaving sections. The following will apply:

    a. Length. Figure 37-3N illustrates various weaving lengths based on the design speed of the highway and ramp curvature of the preceding entrance ramp. The length of the weaving section also must be determined using the *Highway Capacity Manual* (HCM) and the appropriate level of service; see Item 2b below. The minimum weaving section length will be based on the greater value from the HCM or Figure 37-3N.

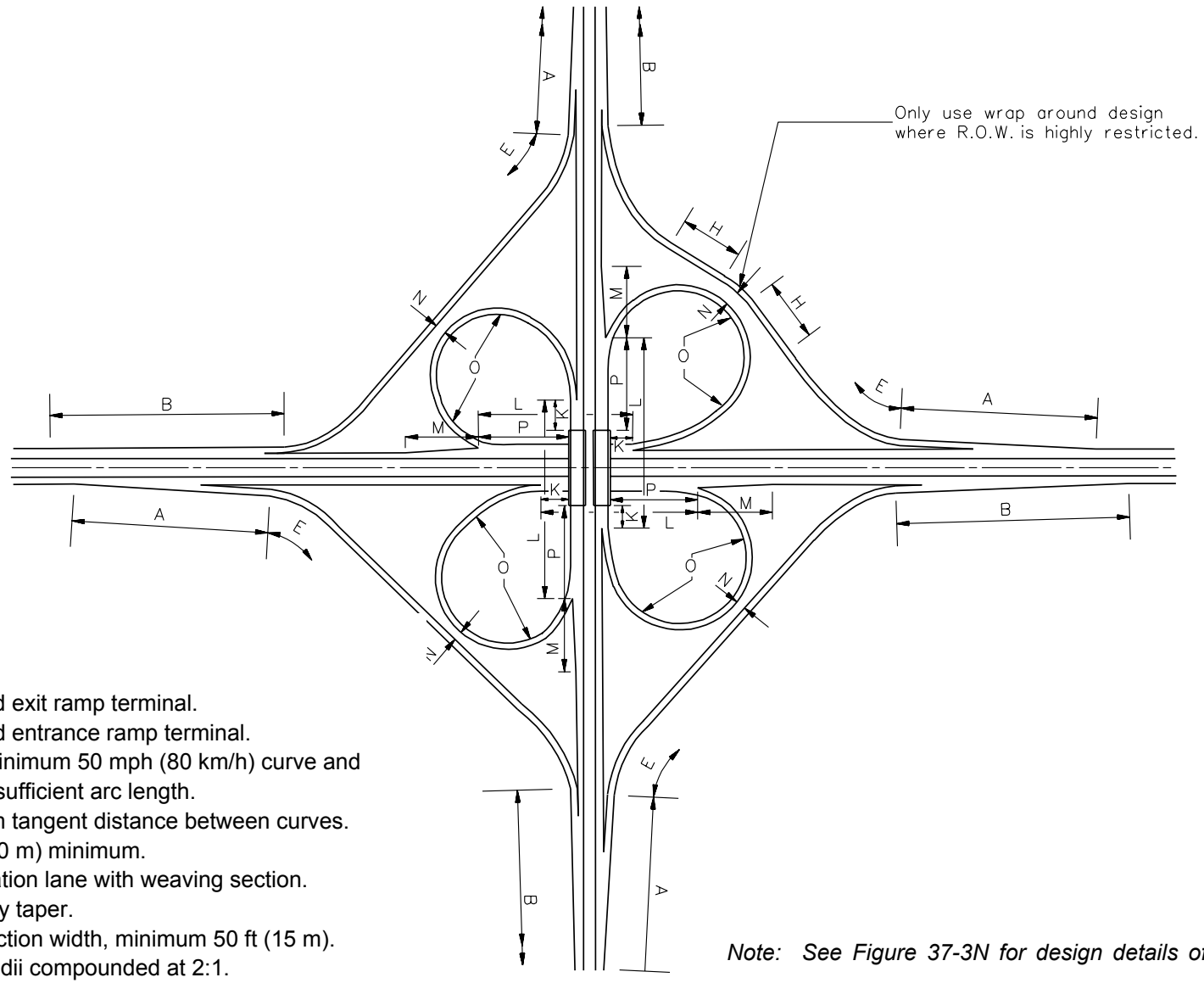

LEGEND

A - Standard exit ramp terminal.
B - Standard entrance ramp terminal.
E - Use a minimum 50 mph (80 km/h) curve and provide sufficient arc length.
H - Minimum tangent distance between curves.
K - 100 ft (30 m) minimum.
L - Acceleration lane with weaving section.
M - Recovery taper.
N - Ditch section width, minimum 50 ft (15 m).
O - Ramp radii compounded at 2:1.
P - Minimum 3 seconds travel time to physical nose of exit gore.

Note: See Figure 37-3N for design details of weaving

CLOVERLEAF INTERCHANGE LAYOUT

Figure 37-3M

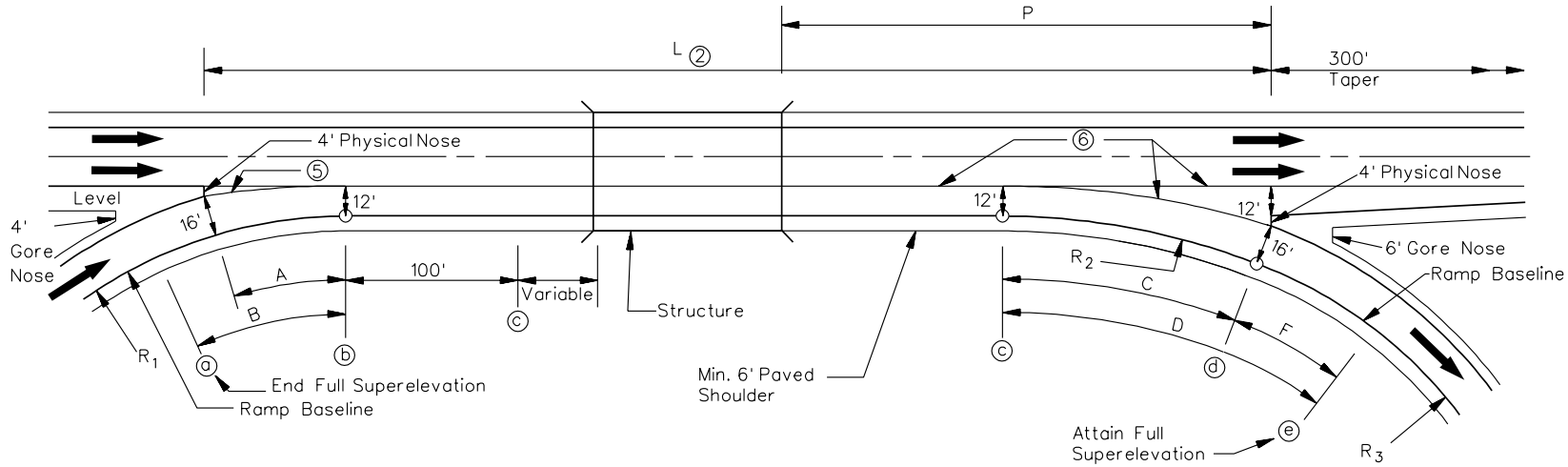

Mainline Design Speed (mph)	R_1 (ft)	A (ft)	B (ft)	L (ft)	P (ft)	R_2 (ft)	C (ft)	R_3 (ft)	F (ft)	D (ft)
70	465	87	100	650	310	835	174	465	55	229
				750				350(7)	51	225
60	465	87	100	650	265	660	154	350	51	205
				750				250(7)	48	202
50	350	75	90	550	220	510	136	250	48	184
				650				170(7)	45	181
40③	250	64	85	550	180	380	117	170	45	162

Elevation of Ramp Baseline at 8%
With Respect to Mainline Edge of Traveled Way

Elev.	Right	Left	S.E.
ⓐ Elev.	1.28'	–	(8%)
ⓑ Elev.	0.72'	–	(6%)
ⓒ Elev.	0.24'	–	(2%)
ⓓ Elev.	1.20'	0.24'	(6%)
ⓔ Elev.	1.52'	0.24'	(8%)

Notes:

1. *For weaving sections on curved alignments, see Section 37-3.06(b).*
2. *L must be analyzed for weaving and increased if necessary.*
3. *The design speed of C-D roadways must be 40 mph minimum to 50 mph maximum.*
4. *Superelevation transitions should not be used on structures.*
5. *Ramp narrowing should be effected throughout the limits of "A."*
6. *The maximum algebraic difference in slopes at the crossover crown lines should not exceed 5%.*
7. *Radii are only used with restrictive right-of-way.*

CLOVERLEAF INTERCHANGE
(Weaving Section)
(US Customary)

Figure 37-3N

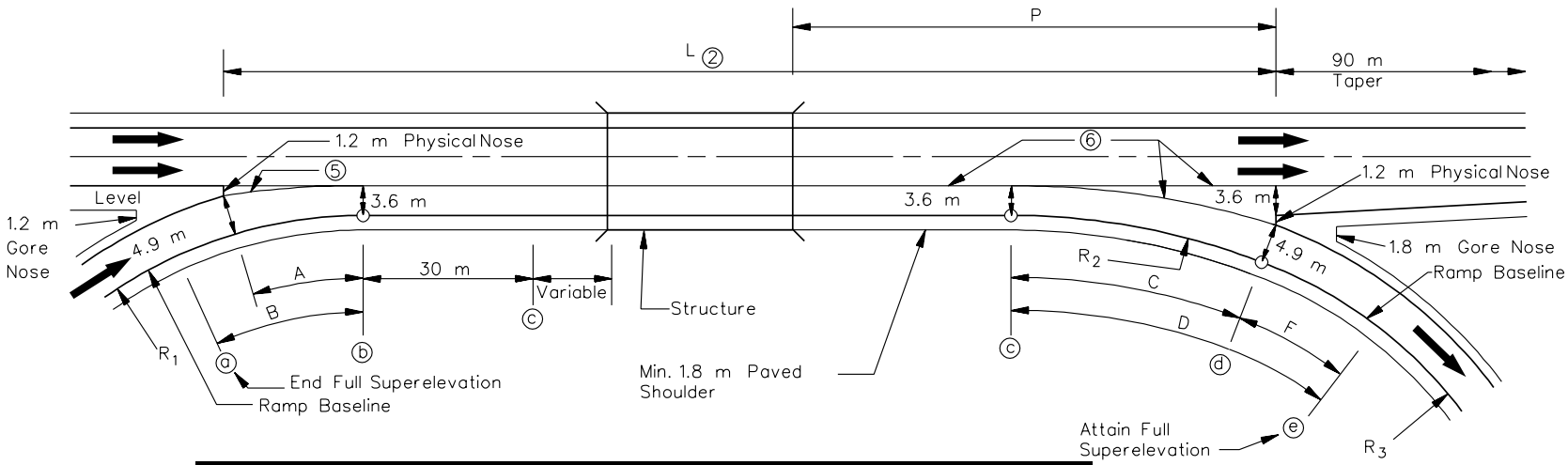

Mainline Design Speed (km/h)	R_1 (m)	A (m)	B (m)	L (m)	P (m)	R_2 (m)	C (m)	R_3 (m)	F (m)	D (m)
110	145	26.52	30	200	92	255	55.36	130	18	73.36
				230				110(7)	16	71.36
100	145	26.52	30	200	84	195	48.30	110	16	64.30
				230				85(7)	15	63.30
80	110	22.99	28	170	67	135	40.01	85	15	55.01
				200				55(7)	14	54.01
60③	80	19.46	26	170	50	90	32.45	55	14	46.45

Elevation of Ramp Baseline at 8%
With Respect to Mainline Edge of Traveled Way

Elev.	Right	Left	S.E.
ⓐ Elev.	392 mm	–	(8%)
ⓑ Elev.	216 mm	–	(6%)
ⓒ Elev.	72 mm	–	(2%)
ⓓ Elev.	366 mm	72 mm	(6%)
ⓔ Elev.	464 mm	72 mm	(8%)

Notes:

1. *For weaving sections on curved alignments, see Section 37-3.06(b).*
2. *L must be analyzed for weaving and increased if necessary.*
3. *The design speed of C-D roadways must be 60 km/h minimum to 80 km/h maximum.*
4. *Superelevation transitions should not be used on structures.*
5. *Ramp narrowing should be effected throughout the limits of "A."*
6. *The maximum algebraic difference in slopes at the crossover crown lines should not exceed 5%.*
7. *Radii are only used with restrictive right-of-way.*

CLOVERLEAF INTERCHANGE
(Weaving Section)
(Metric)

Figure 37-3N

b. Capacity. At a minimum, the level of service of the weaving sections may be one level lower than the adjacent freeway. Desirably, the level of service should be the same as the adjacent mainline. When the total volume on the two successive ramps reaches approximately 1000 vph, interference increases rapidly with a resulting reduction of the through traffic speed. At these weaving volume levels, consider using a collector-distributor road. Section 37-4.02 discusses the use and design of collector-distributor roadways. Expected design capacities for single-lane loops range from 800 to 1200 vph. The higher figures are generally only achievable where the design speed is 30 mph (50 km/h) or higher and few trucks use the loop.

c. Superelevation. Figure 37-3N provides the superelevation criteria for a weaving section adjacent to the tangent mainline. The cross slope of the auxiliary lane between control points c should not be flatter than 1/4″/ft (2%) draining toward the right edge. For mainline alignments curving to the right, control points a, b, d, and e are maintained as shown in Figure 37-3N. Control points c should be congruent with the cross slope of the traveled way, but not greater than 5%. For alignments curving to the left, control points a, d, and e are maintained according to Figure 37-3N. The superelevation rate at control point b is 4%. Where the mainline is curving to the left, the crossover crown at control point c should not exceed 5%. In all cases where weaving sections are located on a curved horizontal alignment, engineering judgment will be required where the above criteria cannot be maintained.

3. Entrance Gore. The location of the entrance gore is determined by adding the minimum weaving length to the exit gore nose location determined in Step 1. At a minimum, place the entrance gore 100 ft (30 m) before the structure and, desirably, 200 ft (60 m) before the structure; see Figure 37-3N.

4. Inner Loops. Once the physical noses of the exit and entrance gores have been determined, the horizontal alignment between the corresponding exit and entrance gores must be determined. Circular curve loop ramps are the most desirable geometrically because speeds and travel paths tend to be more uniform. However, this is often impractical and compound curvature is generally required. The initial and final arcs of the loops may preclude using the specified radii for the design speed of the respective highways and length of the weaving sections. A third intermediate arc is then compounded with initial and final arcs. If necessary, in obtuse quadrants, two arcs may be compounded between the initial and final curves. If the intermediate arc cannot be compounded with the minimum arc lengths provided in Section 37-4.07, one or both of the adjacent weaving sections containing the loop terminals must be adjusted and the process repeated.

5. Outer Connections. Once a satisfactory inner loop design has been developed, the designer must select the appropriate outer connection design. Desirably, this will be a

tangent section connected by radii at the exit and entrance terminals. In place of the tangent section, compound curves having a radius greater than the radius preceding the exit terminal may be used. In urbanized areas where right-of-way may be restricted, a "wrap around" design may be used. In this situation, the central curve of the outer connector is normally made concentric to the arc at the center of the inner loop and the selected radius should provide a minimum design speed of 40 mph (60 km/h). Set the outer connector to provide a common drainage section between the inner loop and the outer connection. Figure 37-3O illustrates a typical layout with a wrap around design.

37-3.07 Partial Cloverleafs

37-3.07(a) General

Partial cloverleaf (parclo) interchanges are those with loops in one, two, or three quadrants. Several of the disadvantages listed for full cloverleafs also apply to partial cloverleafs (e.g., geometric restriction of loops). However, some specific advantages of partial cloverleafs include:

- Partial cloverleafs provide access where one or more quadrants present adverse right-of-way and/or topographic problems which preclude a typical diamond interchange.
- Partial cloverleafs may accommodate heavy left-turn traffic by means of a loop and thereby improve capacity, operations, and safety.
- Depending upon site conditions, partial cloverleafs may offer the opportunity to increase weaving distances.

Partial cloverleaf designs can be segregated into the two-quadrant and four-quadrant partial cloverleaf. These are further explained as follows:

1. Two-Quadrant Partial Cloverleaf Interchanges. The two-quadrant partial cloverleaf interchange is normally used at those locations where cultural or natural features restrict the development of the diamond interchange. The two-quadrant parclo interchanges Type A (Figure 37-3P) and Type B (Figure 37-3Q) are used where right-of-way and/or construction is precluded in opposite quadrants of the interchange. The two-quadrant parclo interchange Type C (Figure 37-3R) is used at intersections where additional structures or extensive relocation of the crossroad would be required to develop the diamond interchange (e.g., adjacent to rivers, railroads).

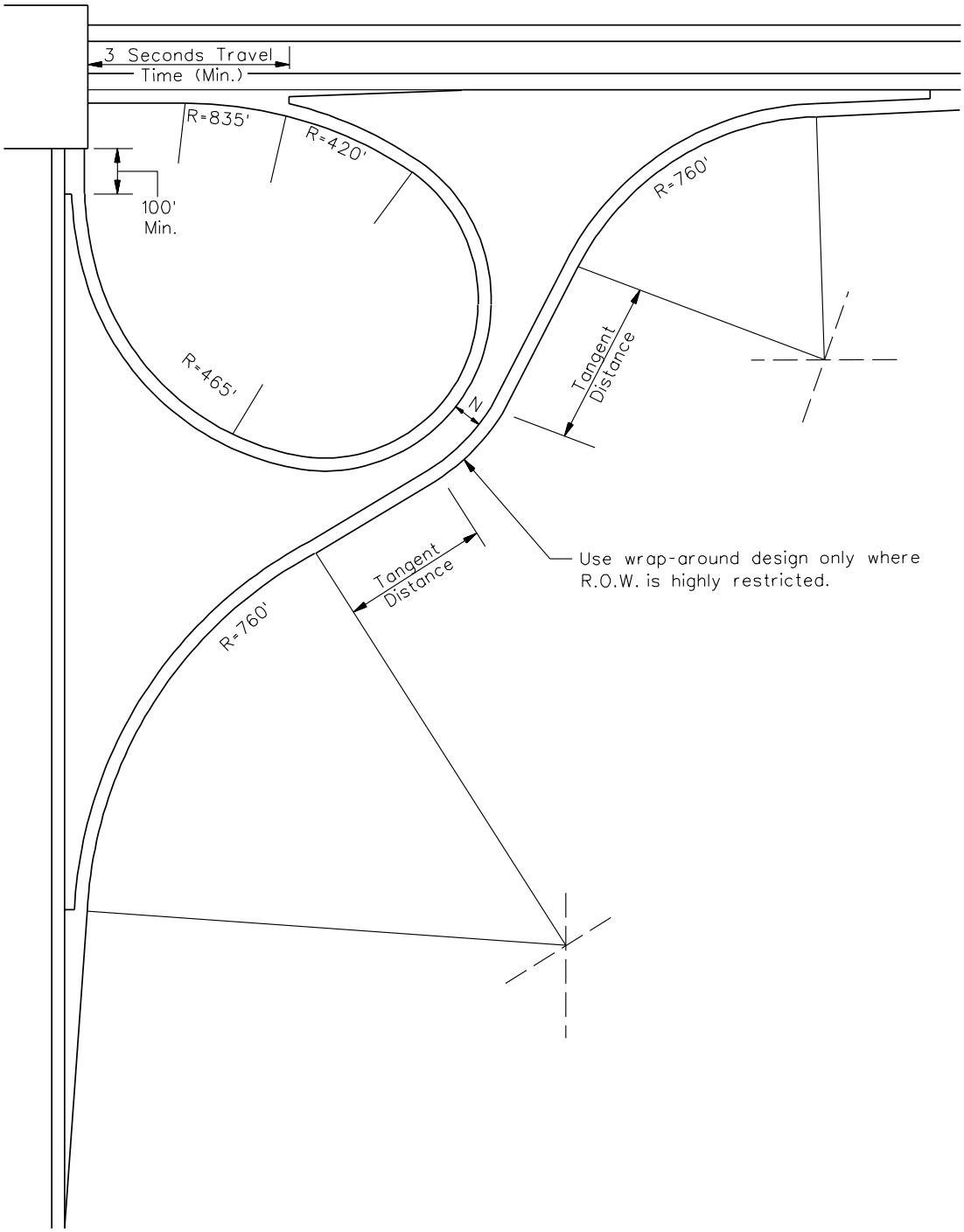

Note: Where the two ramps parallel each other, the elevations of the left edge of the outer ramp should approximately match the elevation of the inner loop ramp.

EXAMPLE OF CLOVERLEAF QUADRANT DESIGN
(Wrap-Around Outer Ramp)

Figure 37-3O

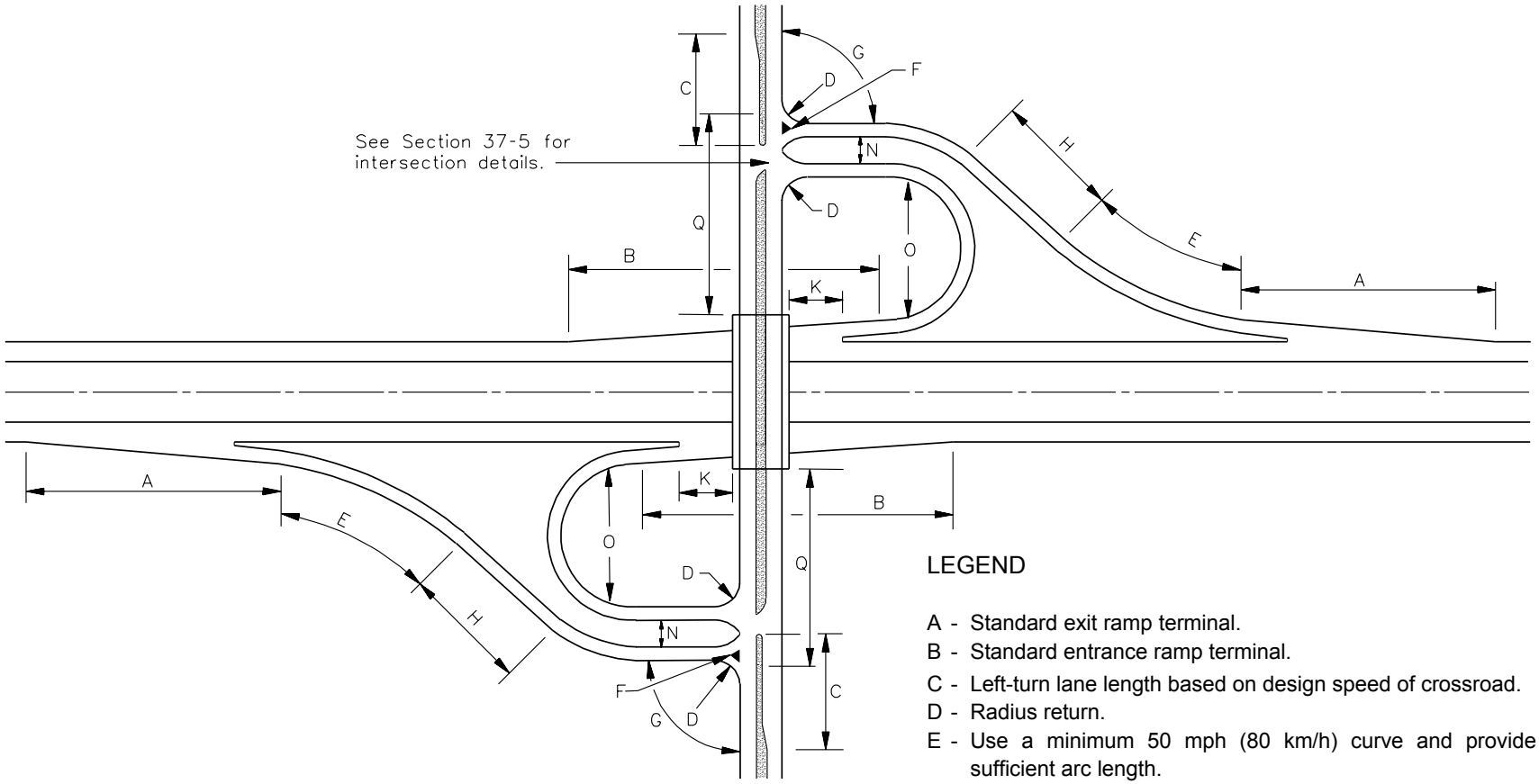

LEGEND

A - Standard exit ramp terminal.
B - Standard entrance ramp terminal.
C - Left-turn lane length based on design speed of crossroad.
D - Radius return.
E - Use a minimum 50 mph (80 km/h) curve and provide sufficient arc length.
F - Directional corner island.
G - Typically 90°.
H - Minimum tangent distance between curves.
K - 100 ft (30 m) minimum.
N - Ditch section width, minimum 50 ft (15 m).
O - Ramp radii compounded at 2:1.
Q - Minimum distance between structure and exit ramp based on intersection sight distance.

Note: Where the two ramps parallel each other, the elevations of the left edge of the outer ramp should approximately match the left edge elevations of the inner loop ramp.

PARTIAL CLOVERLEAF INTERCHANGE LAYOUT
(Two-Quadrant - Type A)

Figure 37-3P

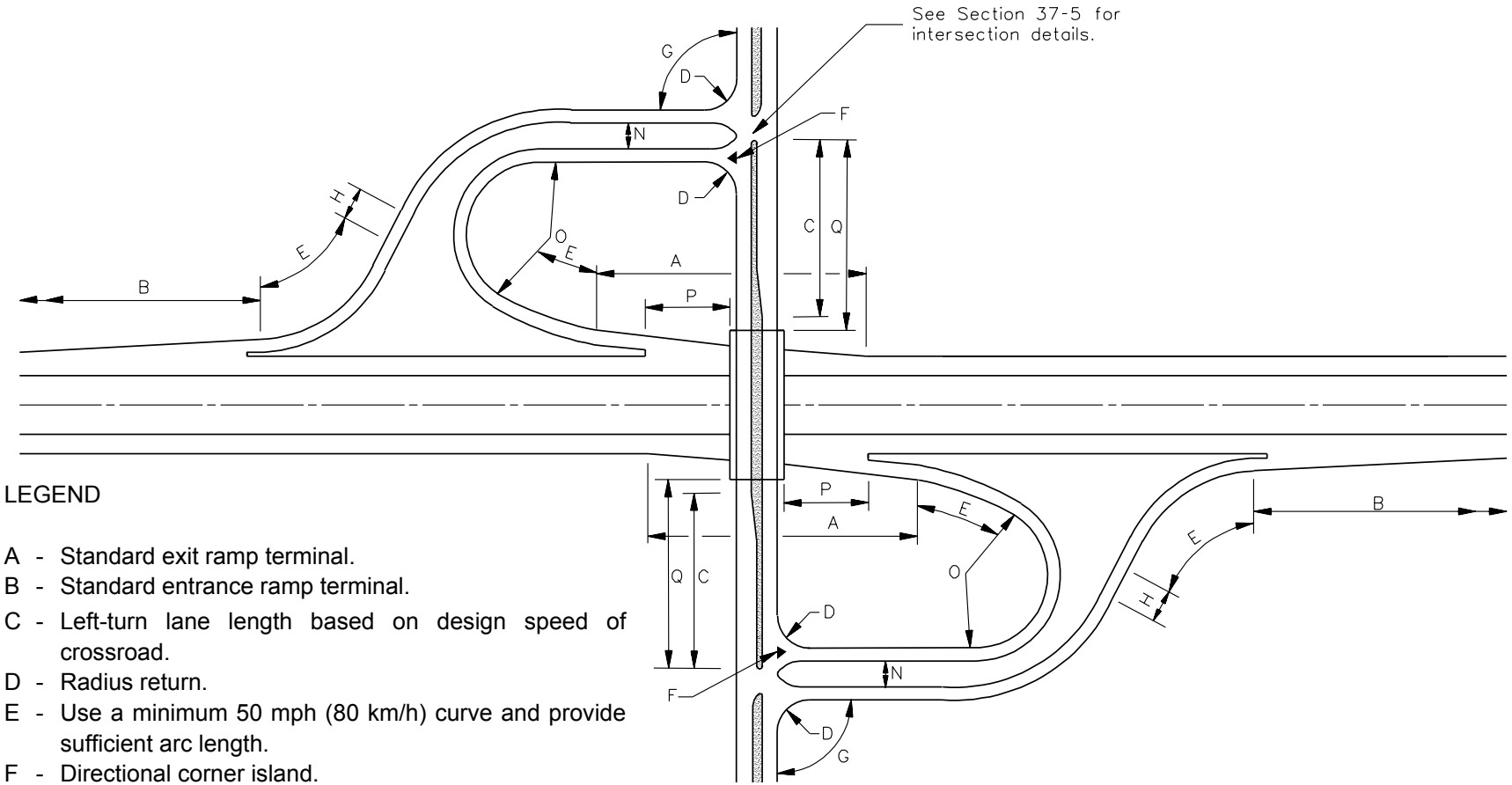

LEGEND

A - Standard exit ramp terminal.
B - Standard entrance ramp terminal.
C - Left-turn lane length based on design speed of crossroad.
D - Radius return.
E - Use a minimum 50 mph (80 km/h) curve and provide sufficient arc length.
F - Directional corner island.
G - Typically 90°.
H - Minimum tangent distance between curves.
N - Ditch section width, minimum 50 ft (15 m).
O - Ramp radii compounded at 2:1.
P - Minimum 3 seconds travel time at design speed of mainline to physical nose.
Q - Minimum distance between structure and exit ramp based on intersection sight distance.

Note: Where the two ramps parallel each other, the elevations of the left edge of the outer ramp should approximately match the left edge elevations of the inner loop ramp.

PARTIAL CLOVERLEAF INTERCHANGE LAYOUT
(Two-Quadrant - Type B)

Figure 37-3Q

LEGEND

A - Standard exit ramp terminal.
B - Standard entrance ramp terminal.
C - Left-turn lane length based on design speed of crossroad.

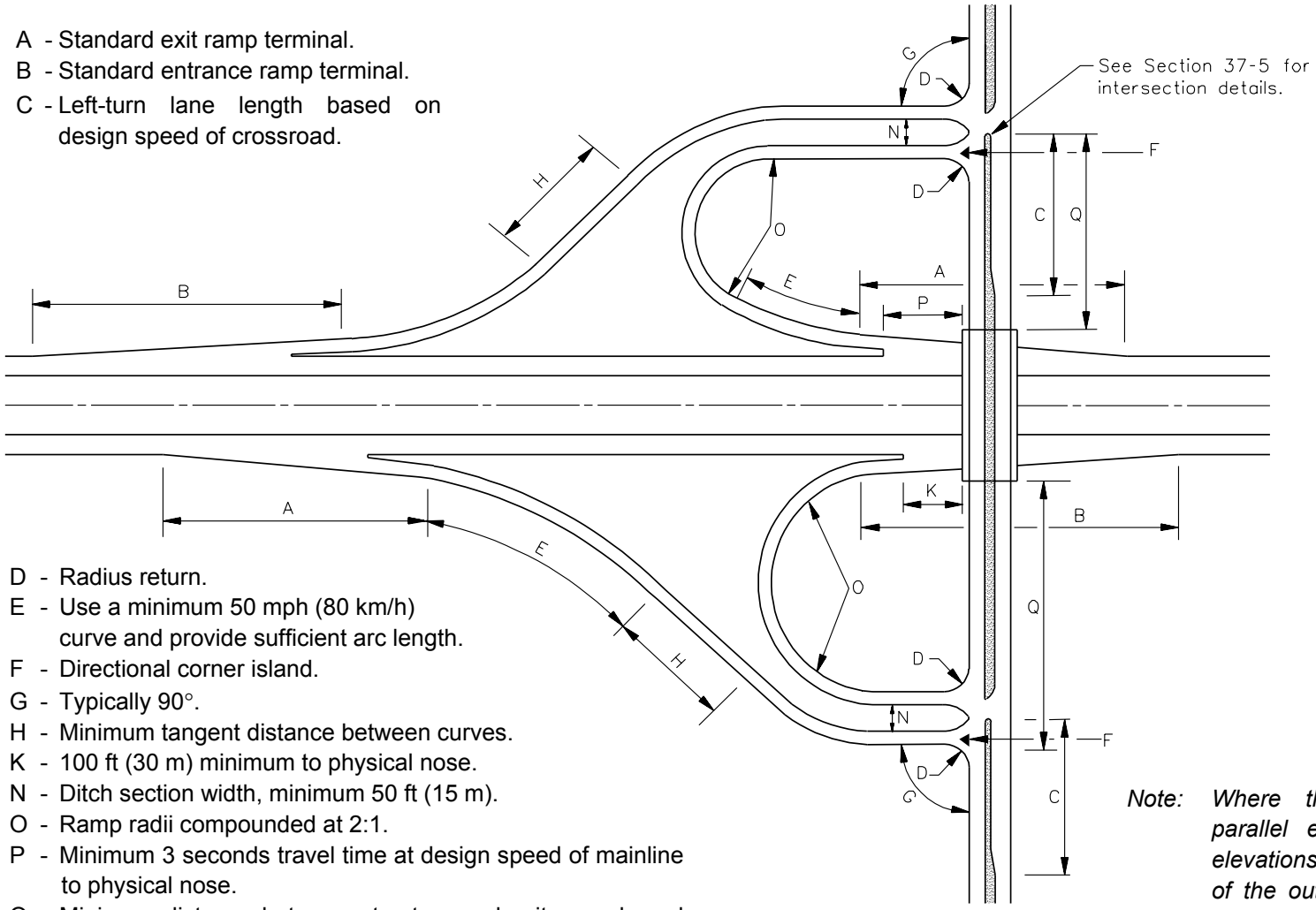

D - Radius return.
E - Use a minimum 50 mph (80 km/h) curve and provide sufficient arc length.
F - Directional corner island.
G - Typically 90°.
H - Minimum tangent distance between curves.
K - 100 ft (30 m) minimum to physical nose.
N - Ditch section width, minimum 50 ft (15 m).
O - Ramp radii compounded at 2:1.
P - Minimum 3 seconds travel time at design speed of mainline to physical nose.
Q - Minimum distance between structure and exit ramp based on intersection sight distance.

Note: Where the two ramps parallel each other, the elevations of the left edge of the outer ramp should approximately match the left edge elevations of the inner loop ramp.

PARTIAL CLOVERLEAF INTERCHANGE LAYOUT
(Two-Quadrant - Type C)

Figure 37-3R

The operations of the two-quadrant parclo interchanges can be further defined as follows:

a. Type A. Both the exit and entrance terminals are located in advance of the structure and two channelized "T" intersections are formed on the crossroad. This arrangement reduces the probability of wrong-way movements. However, all turning movements from the crossroad must undergo a "reverse" operation; i.e., drivers traveling to the right must turn left and those traveling to the left must turn right.

b. Type B. Because the "T" intersections allow normal operations for turning movements from the crossroad, the probability of wrong-way movements are greatly reduced. The exit terminals are located beyond the structure and, due to the lower design speed on the loop ramp, drivers tend to decelerate more on the mainline through lanes in advance of the exit.

c. Type C. No uniform pattern of operation is realized because traffic on the freeway exits in advance of the structure in one direction and beyond the structure in the other. Movements to the right or left from the crossroad are made by turning to the right for one direction and by turning left for the opposite direction. Consequently, channelization of the crossroad, with separate left-turn lanes is essential for proper operation.

2. Four-Quadrant Partial Cloverleaf Interchange. Figures 37-3S and 37-3T illustrate the Type A and Type B four-quadrant parclo interchanges, respectively. The four-quadrant parclo interchange is used to provide for higher traffic volumes than the conventional diamond through the elimination of left-turning traffic at the crossroad ramp terminals.

Although there is a mixture of free-flowing and controlled terminals on the crossroad, there is little operational difficulty because the relative turning volumes and the arrangement of the ramp designs are compatible. Of the two types, Type A is probably more desirable, because it eliminates all conflicting left-turns from the crossroad.

LEGEND

A - Standard exit ramp terminal.
B - Standard entrance ramp terminal.
C - Left-turn lane length based on design speed of crossroad.
D - Radius return.
E - Use a minimum 50 mph (80 km/h) curve and provide sufficient arc length.
F - Directional corner island.
G - Typically 90°.
H - Minimum tangent distance between curves.

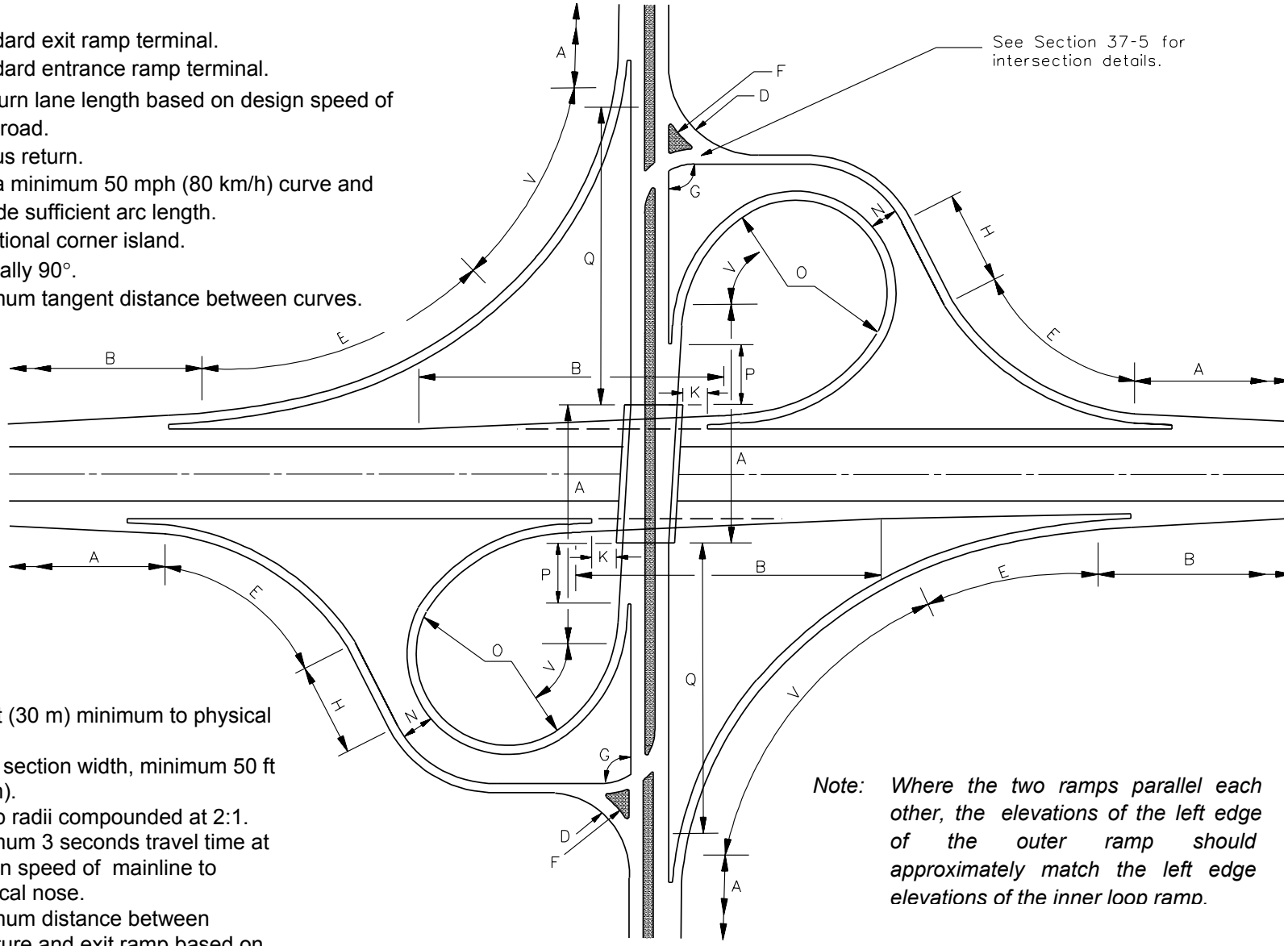

K - 100 ft (30 m) minimum to physical nose.
N - Ditch section width, minimum 50 ft (15 m).
O - Ramp radii compounded at 2:1.
P - Minimum 3 seconds travel time at design speed of mainline to physical nose.
Q - Minimum distance between structure and exit ramp based on intersection sight distance.
V - Curve not less than 10 mph (20 km/h) below cross-road design speed and provide sufficient arc length.

Note: Where the two ramps parallel each other, the elevations of the left edge of the outer ramp should approximately match the left edge elevations of the inner loop ramp.

PARTIAL CLOVERLEAF INTERCHANGE LAYOUT
(Four-Quadrant - Type A)

Figure 37-3S

LEGEND

A - Standard exit ramp terminal.

B - Standard entrance ramp terminal.

C - Left-turn lane length based on design speed of crossroad.

D - Radius return.

E - Use a minimum 50 mph(80 km/h) curve and provide sufficient arc length.

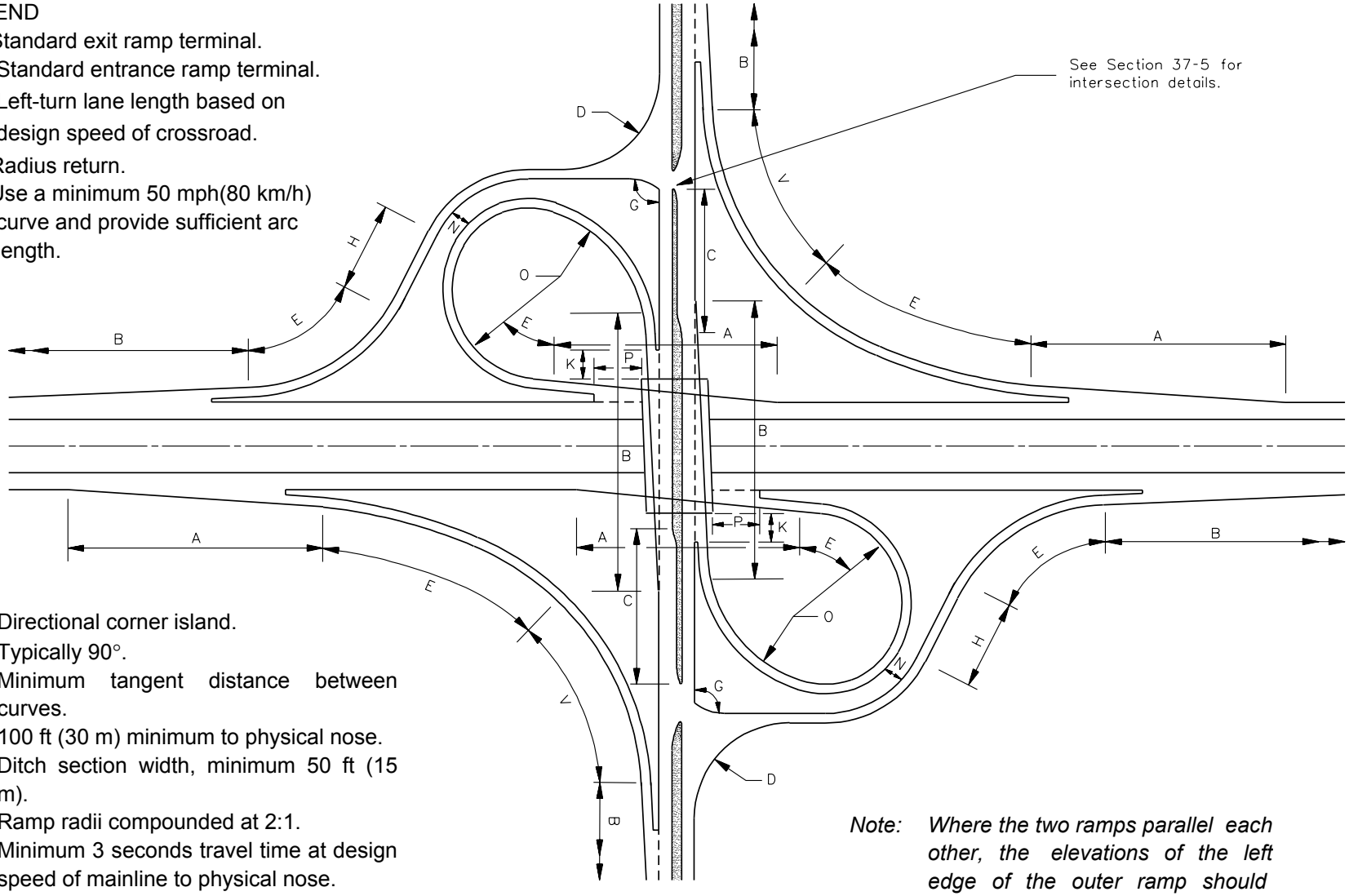

F - Directional corner island.

G - Typically 90°.

H - Minimum tangent distance between curves.

K - 100 ft (30 m) minimum to physical nose.

N - Ditch section width, minimum 50 ft (15 m).

O - Ramp radii compounded at 2:1.

P - Minimum 3 seconds travel time at design speed of mainline to physical nose.

Q - Minimum distance between structure and exit ramp based on intersection sight distance.

V - Curve not less than 10 mph (20 km/h) below crossroad design speed and provide sufficient arc length.

Note: Where the two ramps parallel each other, the elevations of the left edge of the outer ramp should approximately match the left edge elevations of the inner loop ramp.

PARTIAL CLOVERLEAF INTERCHANGE LAYOUT
(Four-Quadrant - Type B)

Figure 37-3T

37-3.07(b) Two-Quadrant Parclo Interchange

Figures 37-3P, 37-3Q, and 37-3R provide the general design and layout criteria for Type A, Type B, and Type C parclo cloverleafs, respectively. During the lay out and design of the two-quadrant partial cloverleaf, consider the following steps:

1. Ramp/Crossroad Intersection Location.:

   a. Type A. Place the physical nose of the standard entrance terminal a minimum of 100 ft (30 m) upstream from the structure. Design the smallest loop radius with a 30 mph or 40 mph (50 km/h or 60 km/h) design speed in rural areas and 25 mph or 30 mph (40 km/h or 50 km/h) design speed in urban areas. Project a tangent line from the loop radius to intersect with the crossroad at approximately 90°. This procedure sets the location of both ramps and the location for the beginning of the left-turn lane on the crossroad. Check the intersection sight distance at the intersection of the exit ramp with the crossroad back to the left along the crossroad; see Section 36-6.

   b. Type B. Place the physical nose of the exit terminal three seconds of travel time beyond the structure. Design the smallest loop radius with a 30 mph to 40 mph (50 km/h or 60 km/h) design speed in rural areas and 25 mph or 30 mph (40 km/h or 50 km/h) design speed in urban areas. Project a tangent line from the loop radius to intersect with the crossroad at approximately 90°. Layout the location of the left-turn lane on the crossroad to fit into the intersection of the entrance ramp. Check the intersection sight distance at the intersection of the exit ramp with the crossroad back to the right along the crossroad; see Section 36-6.

   c. Type C. The ramp/crossroad intersections for a Type C parclo are located in the same manner as the respective terminals for Types A and B.

2. Loop Ramps. For Type A parclos, the radii of succeeding arcs should increase in the direction of travel so that the traffic may enter the mainline highway at a reasonably high operating speed. For Type B parclos, the radii of succeeding arcs should decrease at a ratio of 2:1, with the arc of the sharpest curve being located immediately before the tangent section of the ramp.

3. Outer Connections. The tangent portions of the outer connectors are set parallel to the tangent portions of the loop ramps and are separated by a 50 ft (15 m) median. This width provides for a suitable common drainage section and minimizes headlight glare from opposing traffic. The remaining portion of the outer connection is developed concentric with the loop ramp and then follows a line approximately 45° in relationship to the mainline. The intervening tangent length between the reverse curves should be no less than the sum of 67% of the two superelevation runoff lengths.

37-3.07(c) Four-Quadrant Parclo Interchange

Figures 37-3S and 37-3T illustrate the typical design and layout criteria for four-quadrant partial cloverleaf interchange Types A and B. The design procedures for the four-quadrant parclo are similar to those for the cloverleaf and the corresponding two-quadrant parclo. The loop ramps are designed in the same manner as those of the cloverleaf. However, because they use the standard entrance and exit terminals rather than the weaving section terminals, the loops are smaller than the conventional cloverleaf loops. The outer connectors are designed in the same manner as those of the two-quadrant parclo interchange.

Provide a common drainage section between the outer connectors and the free-flow loops and set the tangent approach to the crossroad to intersect the crossroad at approximately 90°. The right-turn free-flow directional ramps located in opposite quadrants consist of compound circular arcs where the adjacent radii should not exceed a ratio of 2:1. The standard exit and entrance terminals of the directional ramps are located a certain minimum distance from the intersection of the outer connections with the crossroad. These features are illustrated in Figures 37-5K and 37-5L.

37-3.08 Trumpet Interchange

37-3.08(a) General

The trumpet type interchanges, illustrated in Figures 37-3U and 37-3V, are examples of three-leg interchanges where three of the turning movements are accommodated with directional or semi-directional ramps and one movement by a loop ramp.

Trumpet Types A and B are used primarily:

- at intersections with non-freeway spur connections or routes which are terminated at the freeway,
- at intersections with other highways which are contiguous with the freeway for a short distance and then diverge on their own alignment, or
- where future expansion to the unused quadrant is not practical or likely.

They are typically limited to intermediate traffic volumes that can be accommodated by single-lane ramps.

LEGEND

A - Standard exit ramp terminal.
B - Standard entrance ramp terminal.
E - Use a minimum 50 mph (80 km/h) curve and provide sufficient arc length.
F - Directional corner island.
G - Typically 90°.

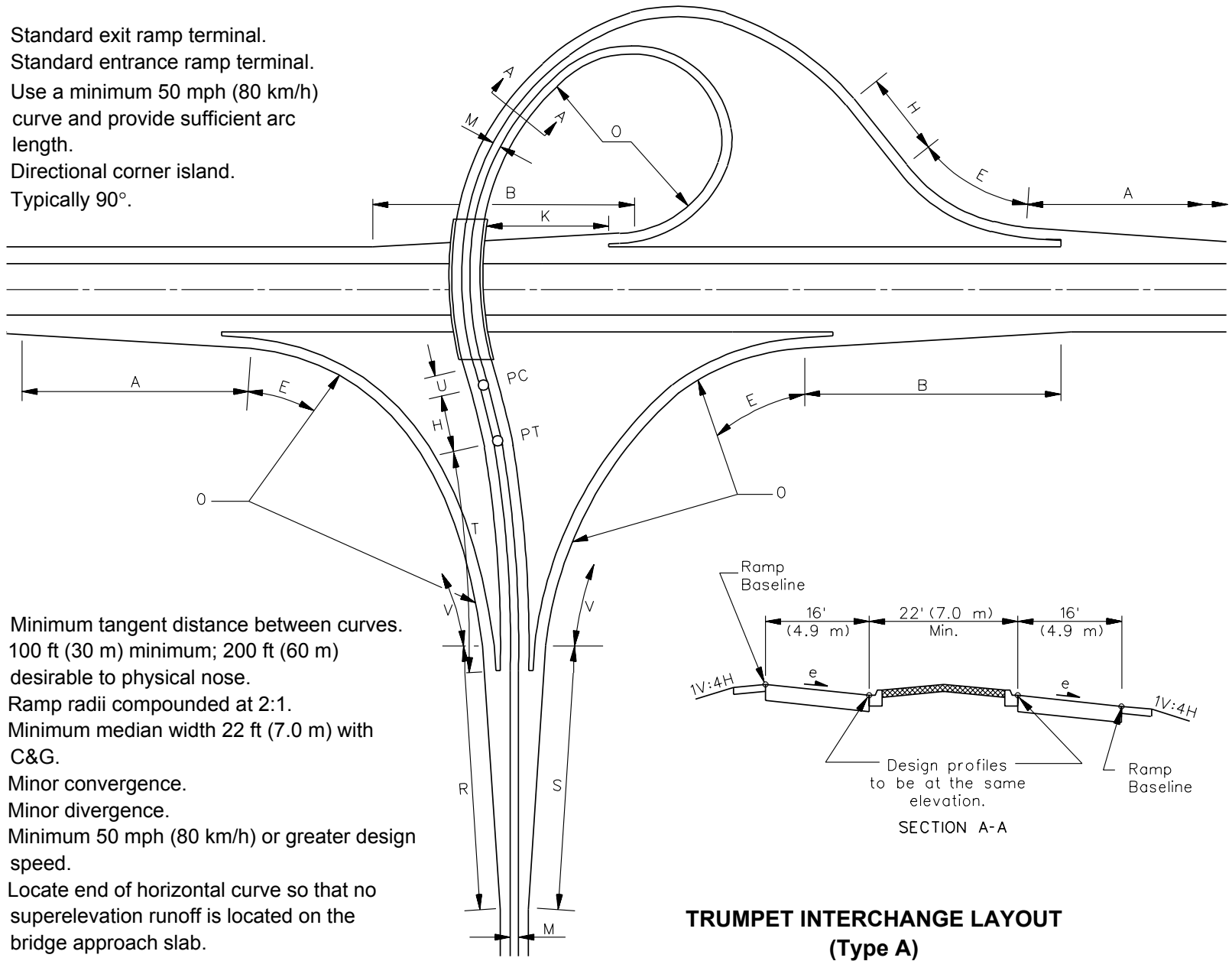

H - Minimum tangent distance between curves.
K - 100 ft (30 m) minimum; 200 ft (60 m) desirable to physical nose.
O - Ramp radii compounded at 2:1.
M - Minimum median width 22 ft (7.0 m) with C&G.
R - Minor convergence.
S - Minor divergence.
T - Minimum 50 mph (80 km/h) or greater design speed.
U - Locate end of horizontal curve so that no superelevation runoff is located on the bridge approach slab.
V - Curve not less than 5 mph (10 km/h) below crossroad design speed and provide sufficient arc length.

TRUMPET INTERCHANGE LAYOUT
(Type A)

Figure 37-3U

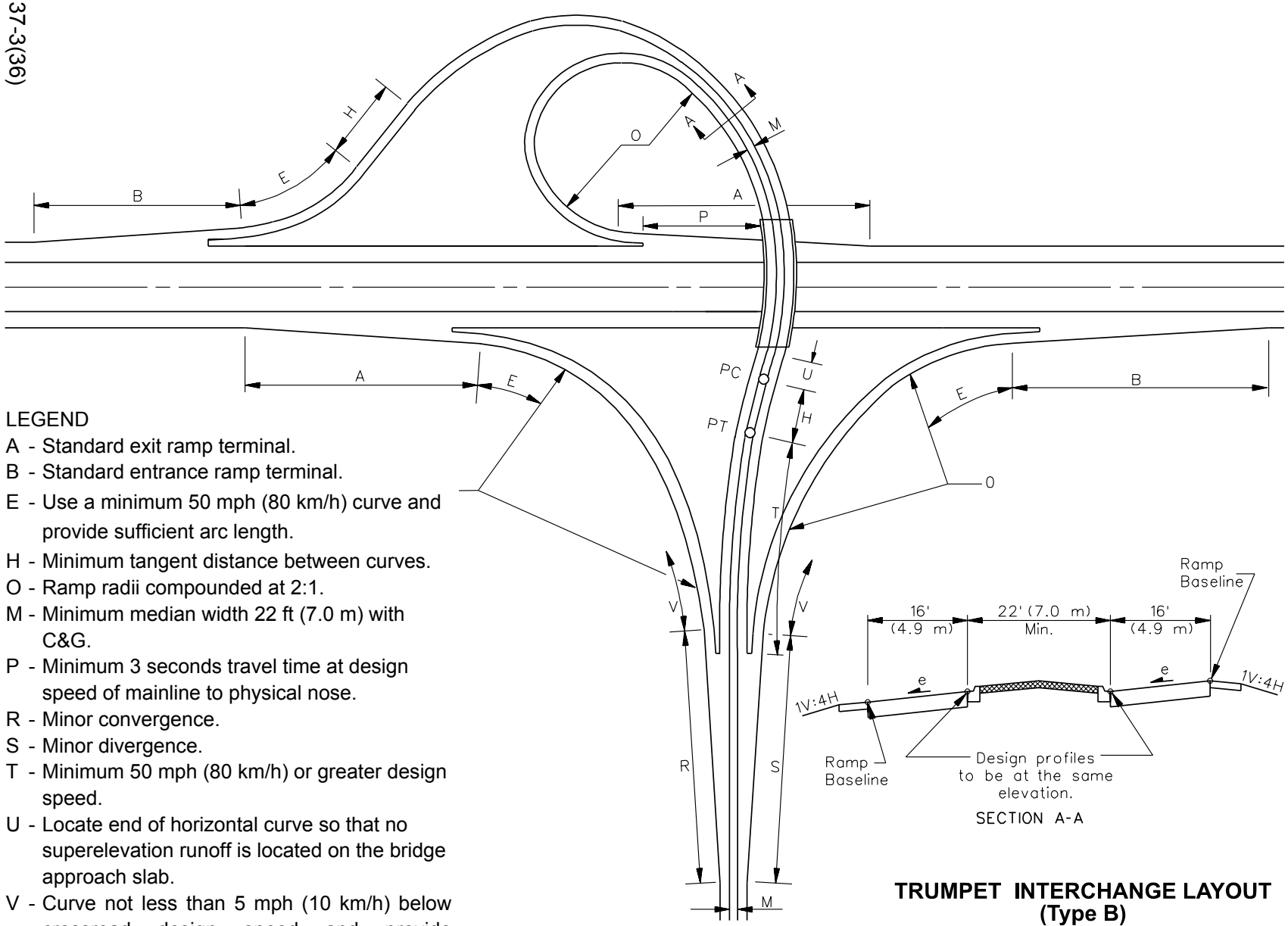

LEGEND

A - Standard exit ramp terminal.
B - Standard entrance ramp terminal.
E - Use a minimum 50 mph (80 km/h) curve and provide sufficient arc length.
H - Minimum tangent distance between curves.
O - Ramp radii compounded at 2:1.
M - Minimum median width 22 ft (7.0 m) with C&G.
P - Minimum 3 seconds travel time at design speed of mainline to physical nose.
R - Minor convergence.
S - Minor divergence.
T - Minimum 50 mph (80 km/h) or greater design speed.
U - Locate end of horizontal curve so that no superelevation runoff is located on the bridge approach slab.
V - Curve not less than 5 mph (10 km/h) below crossroad design speed and provide sufficient arc length.

TRUMPET INTERCHANGE LAYOUT (Type B)

Figure 37-3V

The “bell” of the trumpet is normally oriented to favor the predominant turning movements. Where the volume of traffic exiting from the freeway exceeds the volume entering from the minor highway, use the trumpet Type A. Where the volume entering from the minor highway exceeds the volume exiting from the freeway, use the trumpet Type B. Where the entering and exiting volumes are comparable, the trumpet Type A is preferred due to its better operational characteristics.

37-3.08(b) Design Considerations

Figures 37-3U and 37-3V illustrate the design and layout criteria for Type A and Type B trumpet interchanges. Use Type A configuration where the predominate movement is left-turns from the freeway to the minor road. Use Type B configuration where the predominate movement is right turns from the freeway to the minor road.

In designing the trumpet interchange, first develop the location of the loop ramp and structure. This requires a certain amount of trial and error because the loop is a continuation of the minor highway rather than a connection to a standard entrance and exit terminal. The loop and the outer connection are placed on curved alignment as they pass over the major highway. Reverse curvature is used before the structure for operational purposes. Because the minor highway is typically carried over, full superelevation should be attained before the structure approach slab so that the structure and approach slabs may be designed with a constant superelevation rate.

The outer connector is located adjacent and parallel to the roadway of the loop ramp and the rest of the ramp is located based on the selected design speed. These directional ramps provide turning movements to and from the minor highway through the use of standard entrance and exit terminals on the freeway and minor convergence and divergence terminals on the minor highway. Design the directional ramps for right turns to and from the minor highway using compound curves and a minimum design speed of 50 mph (80 km/h).

As shown in Figures 37-3U and 37-3V, the loop ramps or outer connectors do not exit from the minor highway with the standard terminals, but are a continuation of the single-lane roadways formed by the minor divergence and convergence terminals; see Figures 37-6R and 37-6T. Because of sight distance restrictions, due to the presence of the structure or piers and higher possible speeds on the stem approach, motorists’ may be confronted with an abrupt transition in speed and alignment immediately beyond the structure. To minimize these operational difficulties, place the ramps on curved alignment before passing over or under the freeway with larger radii.

37-3.09 <u>Directional and Semi-Directional Interchanges</u>

Directional or semi-directional ramps are used for heavy left-turn movements, to reduce travel distance, to increase speed and capacity, and to eliminate weaving. These types of connections

allow an interchange to operate at a better level of service than is possible with loops. Figures 37-3W and 37-3X illustrate common directional and semi-directional ramps and/or roadways. Left-hand exits and entrances should be avoided.

Directional or semi-directional interchanges are most often provided in urban or suburban areas at freeway-to-freeway or freeway-to-arterial intersections. In rural areas, there is generally an insufficient traffic volume to justify the use of directional or semi-directional ramps in all quadrants. A directional interchange provides the highest possible capacity and level of service, but it is often costly to construct due to the number of structures required and amount of embankment.

No uniform design procedures can be established for directional or semi-directional ramps at interchanges due to the great variety of configurations. Loop ramps and weaving sections, where used, are designed as discussed in Sections 37-3.06 and 37-3.07. Because motorists perceive that higher operating speeds are possible on directional and semi-directional roadways, the alignment of these facilities should be as free flowing as practical.

37-3.10 Selection

Typically, several interchange types will be evaluated for potential application considering the following:

- compatibility with the highway system and functional classification of the intersecting highway;
- route continuity and uniformity with adjacent interchanges;
- level of service for each interchange element (e.g., freeway ramp terminal, ramp proper, ramp/crossroad terminal);
- operational and safety considerations (e.g., signing);
- availability of access control along the crossroad;
- road-user impacts (e.g., travel distance and time, convenience, comfort);
- driver expectancy;
- topography and geometric design;
- right-of-way impacts and availability, construction and maintenance costs, and potential for stage construction;
- accommodation of pedestrians and bicyclists on crossroad;

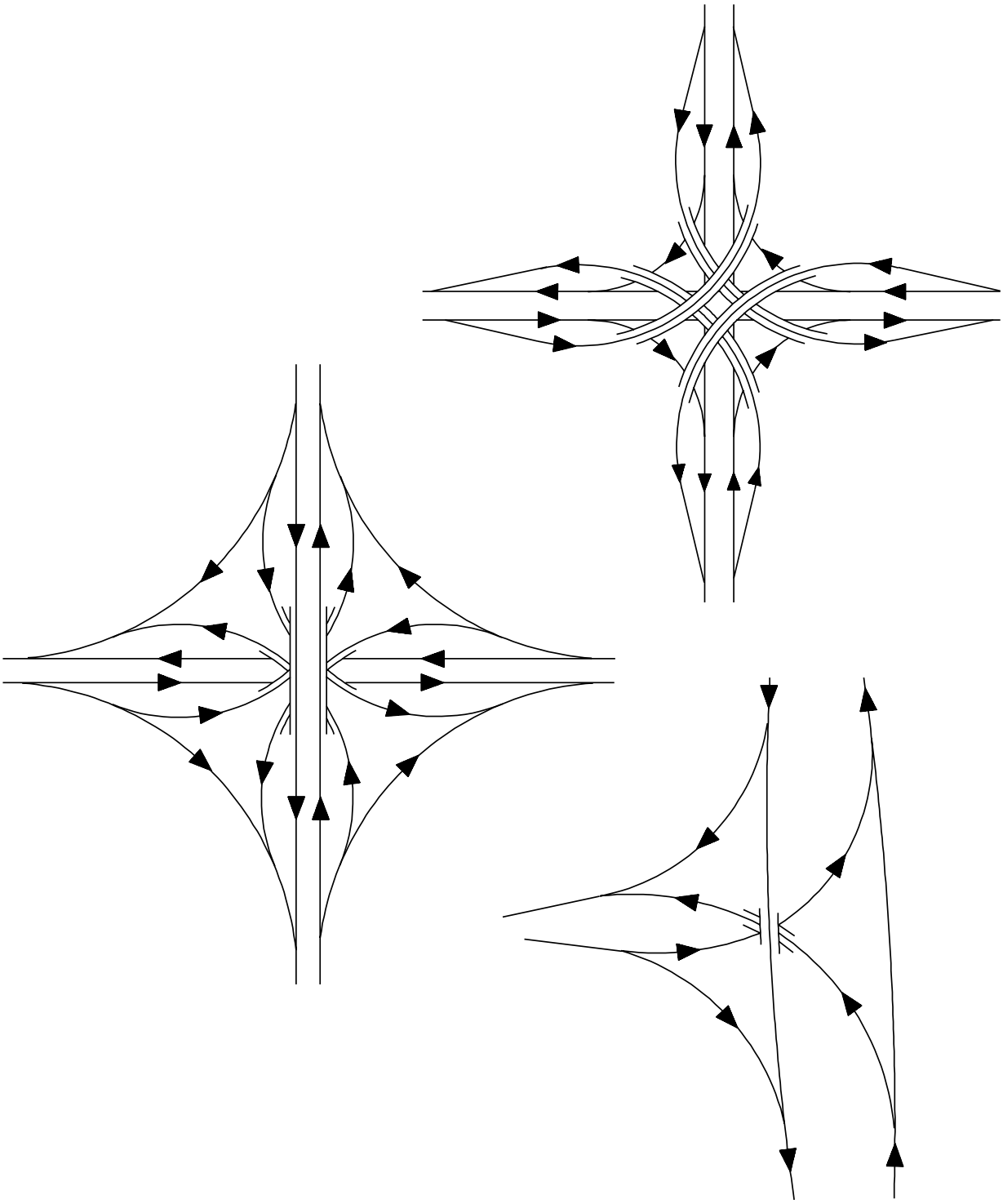

DIRECTIONAL INTERCHANGES
Figure 37-3W

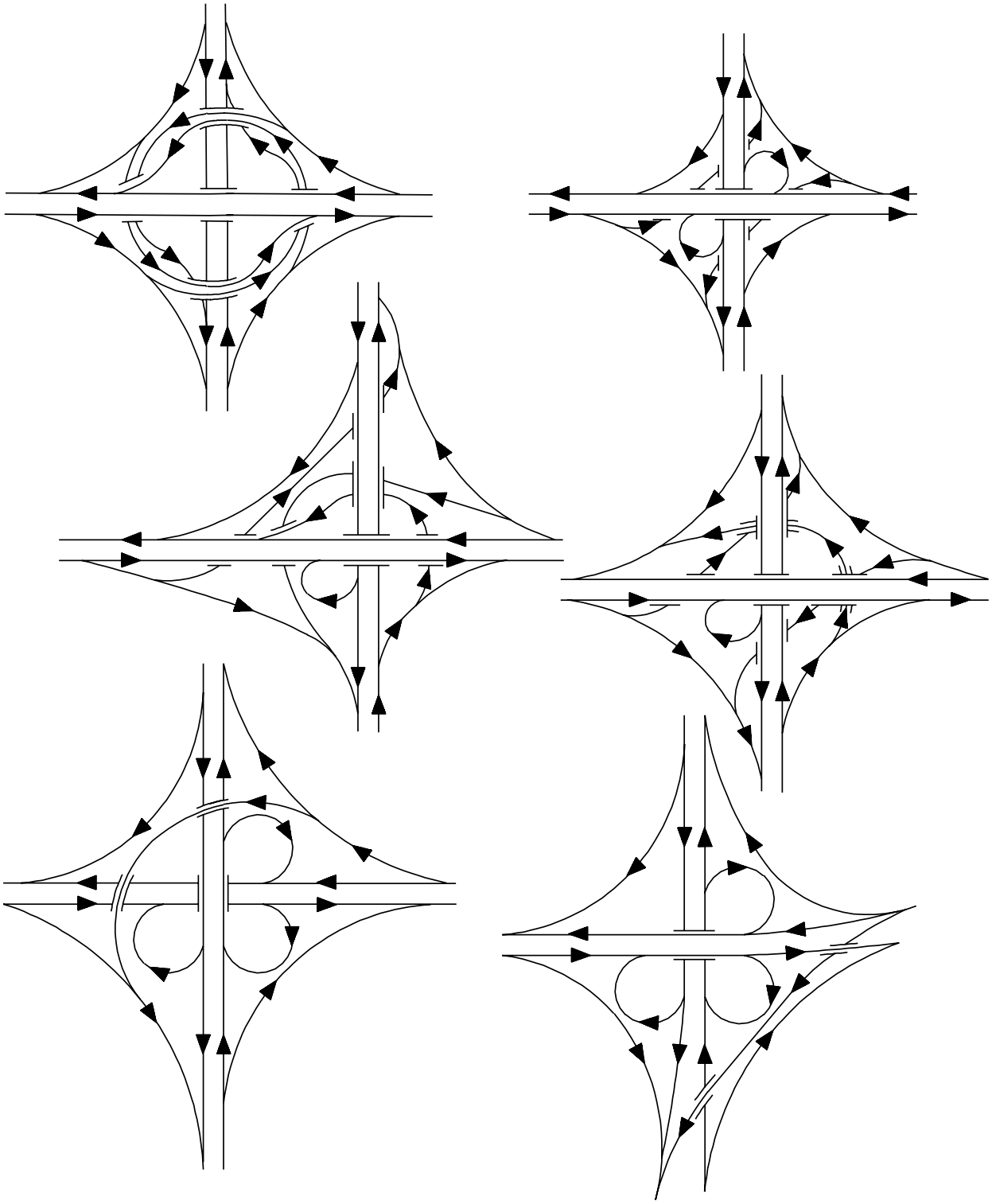

SEMI-DIRECTIONAL INTERCHANGES
Figure 37-3X

- environmental impacts; and
- potential growth of surrounding area.

In addition, consider the following which will influence the selection of an interchange type:

1. Basic Types. A freeway interchange will be one of two basic types. A "systems" interchange will connect a freeway to a freeway; a "service" interchange will connect a freeway to a lesser facility.

2. Urban/Rural. In rural areas where interchanges occur relatively infrequently, the type selected is normally influenced by existing topography and environmental factors. In urban areas where restricted right-of-way and close spacing of interchanges are common, the type selection and design of the interchange may become more complex. The operational characteristics of the crossroad and proximity of nearby interchanges must be considered when selecting and designing an urban interchange.

3. Capacity. The need for loop ramps or other free-flowing ramps may depend upon the capacity of the ramp termini to adequately accommodate the turning traffic. Conduct a capacity analysis to determine if the ramp termini will be adequate and to determine the appropriate number of approach lanes on the crossroad and ramps.

4. Movements. All interchanges should provide for all movements, even when the anticipated turning volume is low.

37-4 RAMP DESIGN

37-4.01 Ramp Types

The components of a ramp include the freeway ramp terminal, the ramp proper, and a free-flow or controlled ramp terminal at the crossroad. Although ramps have varying shapes, each can be classified into one or more of the types illustrated in Figure 37-4A and discussed in the following sections.

37-4.01(a) Loop Ramps

There are two types of loop ramps:

1. Free-Flow. The free-flow loop, Figure 37-4A(a), consists of compounded circular arcs which turn through approximately 270°. The initial and final curves of the loop are tangent to the standard exit or entrance terminal or to a weaving section, depending upon the interchange type. The free-flow loop is a standard component of the cloverleaf interchange, the four-quadrant partial cloverleaf interchange, and the trumpet interchange. Free-flow loops are designed so that the central arc is a sharper radius than that of either the initial or final arcs, or the central arc is intermediate between the two. Motorists decelerate from the speed of the through highway over the initial portion of the ramp and accelerate uniformly over the final portion of the ramp.

   Avoid flatback loops or loop ramps where the central arc has a greater radius than either the initial or final arcs.

2. Controlled Terminal. Controlled terminal loops, Figure 37-4A(b), are a component of the two-quadrant partial cloverleaf interchange. They are used most often with the standard entrance and exit terminals. Controlled terminals are provided at the intersections with the crossroad and permit both right- and left-turning movements. Wherever practical, design the angle of intersection for 90°.

37-4.01(b) Diagonal Ramps

Diagonal ramps, Figure 37-4A(c), are a component of the diamond interchange. Standard entrance and exit terminals are used on the major road, and controlled terminals are provided on the crossroad. The angle of intersection with the crossroad varies between 60° and 90°; see Section 37-3.02(d).

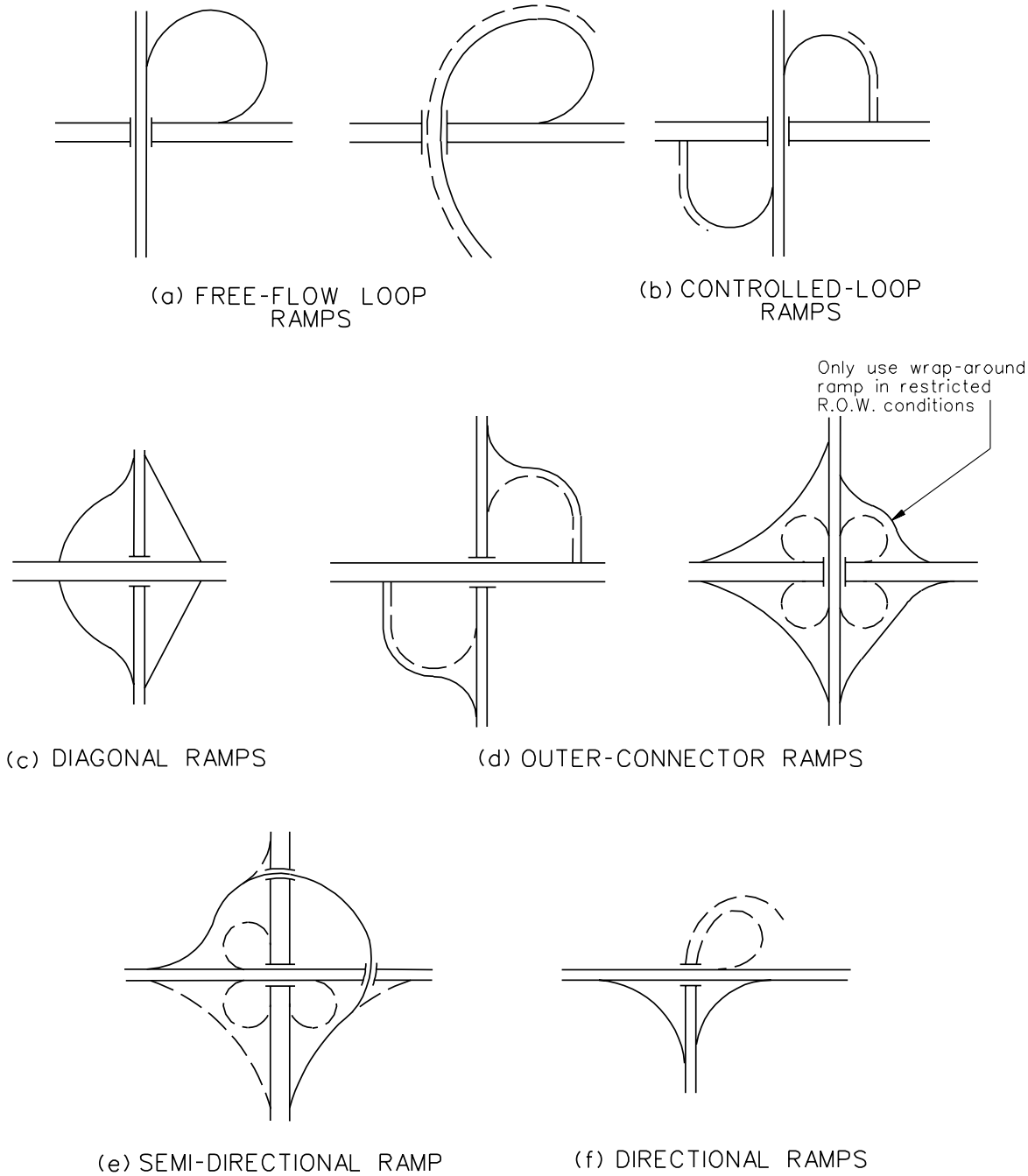

RAMP TYPES

Figure 37-4A

37-4.01(c) Outer-Connector Ramps

Outer-connector ramps are in the same quadrant and to the outside of loop ramps; see Figure 37-4A(d). They may have free-flow operation (e.g., at cloverleaf or trumpet interchanges) or have controlled operations (e.g., at partial cloverleaf interchanges).

37-4.01(d) Semi-Directional Ramps

Semi-directional ramps are indirect in alignment, yet more direct than a loop ramp. These ramps are illustrated in Figure 37-4A(e). Motorists making a left turn normally exit to the right and initially turn to the right, reversing direction before entering the intersecting highway. The outer connection of the trumpet interchange is also a semi-directional ramp.

37-4.01(e) Directional Ramps

Directional ramps do not deviate greatly from the intended direction of travel. These are illustrated in Figure 37-4A(f) as an element of a trumpet interchange. They are also used to accommodate single lane, right-turning traffic on four-quadrant partial cloverleafs, semi-directional, and directional interchanges.

37-4.02 Collector-Distributor Roadways

37-4.02(a) Usage

A collector-distributor (C-D) roadway is an auxiliary roadway parallel to and separated from the main traveled way which serves to collect and distribute traffic from several access points. It provides greater capacity and permits higher operating speeds to be maintained on the main traveled way. C-D roadways may be provided at single interchanges, through two adjacent interchanges or, in urban areas, continuously through several interchanges. Figure 37-3L illustrates a schematic of a C-D roadway within a full cloverleaf interchange.

Usually, interchanges designed with single exits are superior to those with two exits, especially if one exit is a loop ramp or the second exit is a loop ramp preceded by a loop entrance ramp. Whether used in conjunction with a full cloverleaf or with a partial cloverleaf interchange, the single-exit design may improve the operational efficiency of the entire interchange. C-D roadways use the single exit approach to improve the interchange operational characteristics. C-D roadways will:

- remove weaving maneuvers from the mainline and transfer them to the slower speed C-D roadways,
- provide high-speed single exits and entrances from and onto the mainline,

- satisfy driver expectancy by placing the exit before the grade separation structure,
- simplify signing and the driver decision-making process, and
- provide uniformity of exit patterns.

C-D roadways are most often warranted when traffic volumes (especially in weaving sections) are so high that the interchange cannot operate at an acceptable level of service. They also may be warranted where the speed relationship between weaving and non-weaving vehicles is significant.

37-4.02(b) Design

When designing C-D roadways, consider the following:

1. Design Speed. The design speed of a C-D roadway usually ranges from 40 to 50 mph (60 to 80 km/h). Typically, use a design speed within 20 mph (30 km/h) of the mainline design speed.

2. Lane Balance. Maintain lane balance at the exit and entrance points of the C-D roadways; see Section 37-2.03.

3. Width. C-D roadways may be one or two lanes, depending upon the traffic volumes and weaving conditions. C-D roadways are designed similar to ramps with traveled way widths of either 16 ft or 24 ft (4.9 m or 7.2 m).

4. Separations. The separation between the C-D roadway and mainline should be as wide as practical. Figure 37-4B provides the minimum separation that should be provided with and without a median barrier.

5. Terminal Designs. Figure 37-4C illustrates typical entrance terminal designs for C-D roadways. Figure 37-4D illustrates typical exit terminal designs.

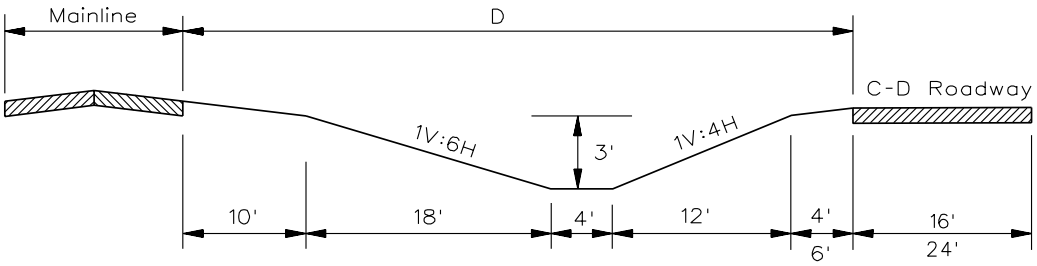

WITHOUT MEDIAN BARRIER

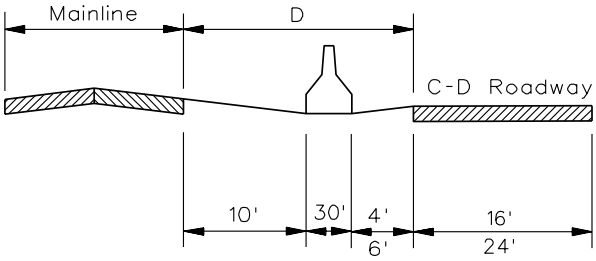

WITH MEDIAN BARRIER

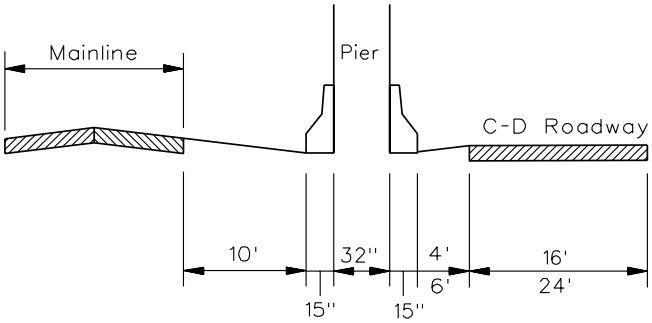

WITH PIER AND MEDIAN BARRIER

SEPARATION WIDTH BETWEEN C-D ROADWAY AND MAINLINE
(US Customary)

Figure 37-4B

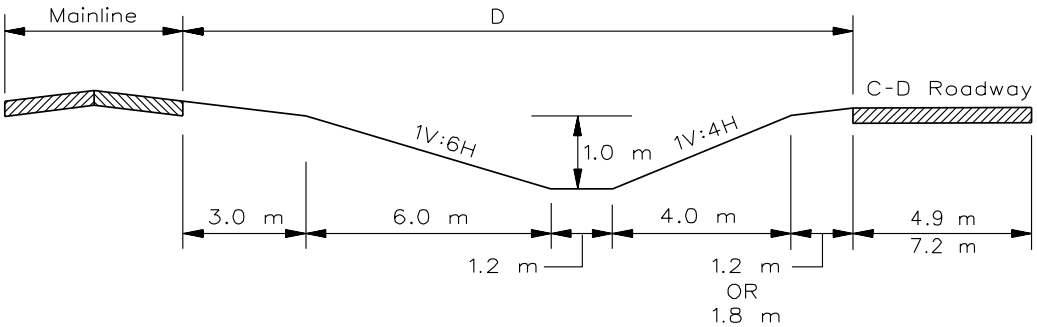

WITHOUT MEDIAN BARRIER

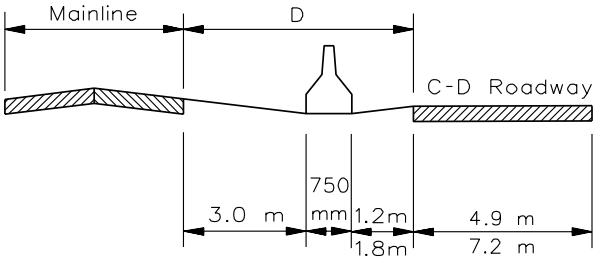

WITH MEDIAN BARRIER

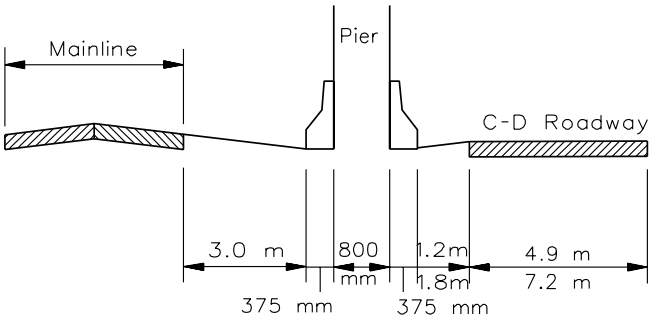

WITH PIER AND MEDIAN BARRIER

SEPARATION WIDTH BETWEEN C-D ROADWAY AND MAINLINE
(Metric)

Figure 37-4B

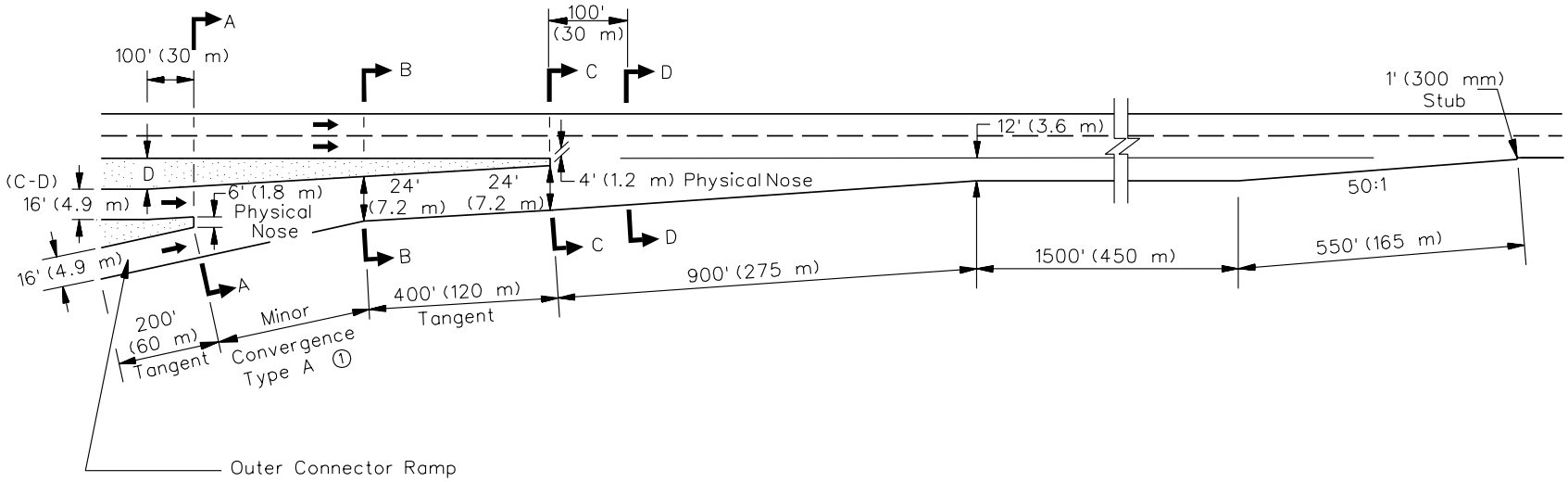

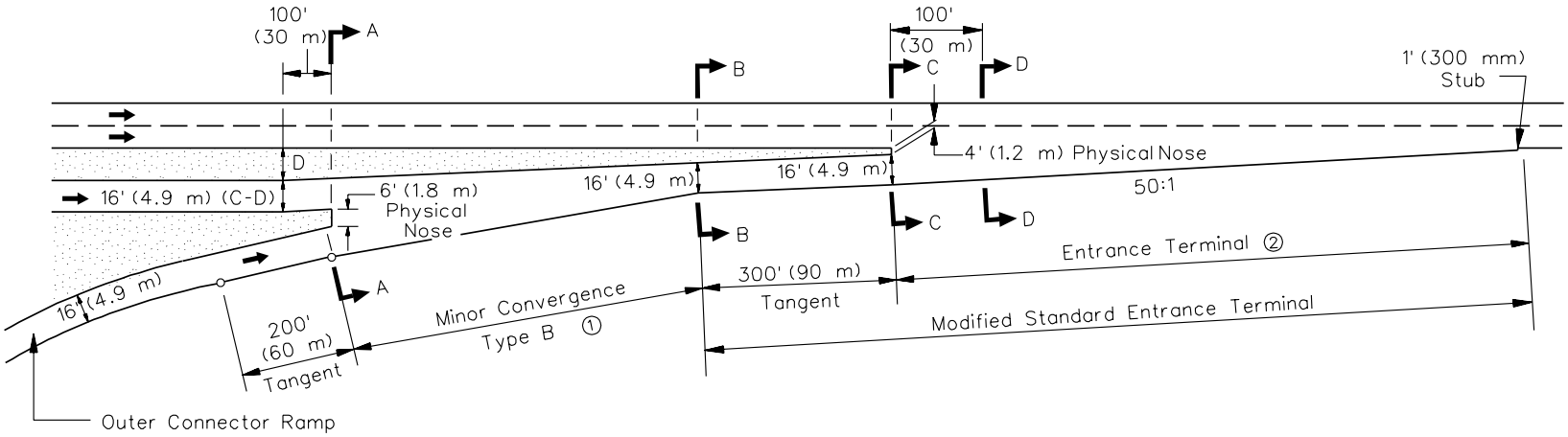

COLLECTOR-DISTRIBUTOR ENTRANCE TERMINAL DESIGNS

Figure 37-4C

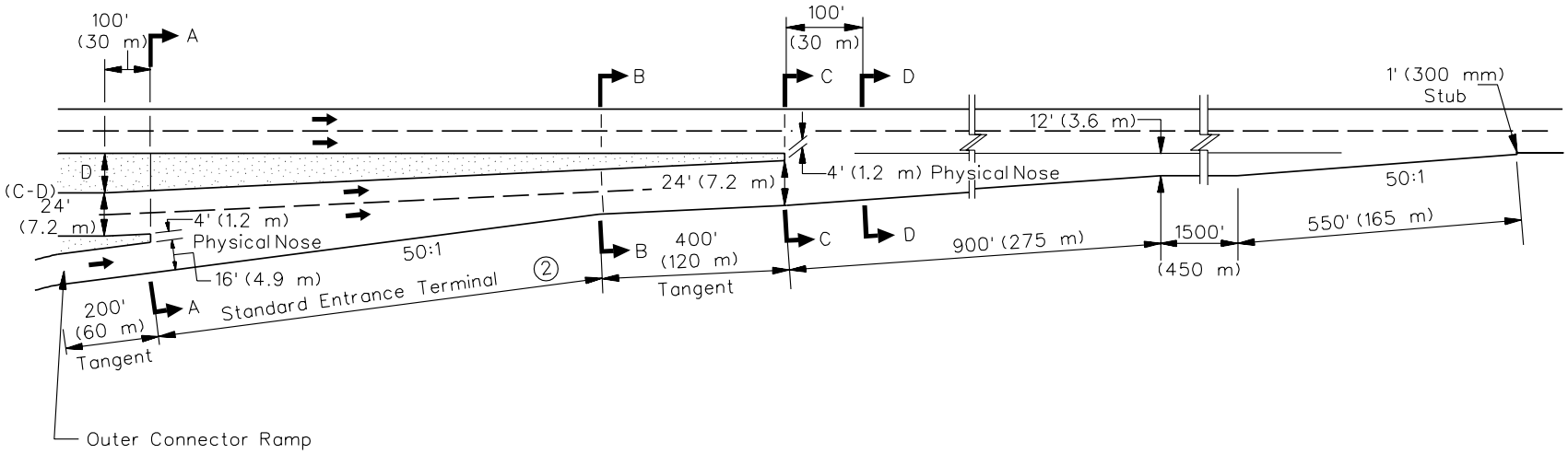

Notes:

1. *See Figure 37-6T for minor convergence designs.*
2. *See Figure 37-6K for standard entrance design.*
3. *D = Median Width, see Figure 37-4B.*
4. *Develop cross sections A-A, B-B, C-C, and D-D during the preparation of the IDS.*

COLLECTOR-DISTRIBUTOR ENTRANCE TERMINAL DESIGNS

Figure 37-4C
(Continued)

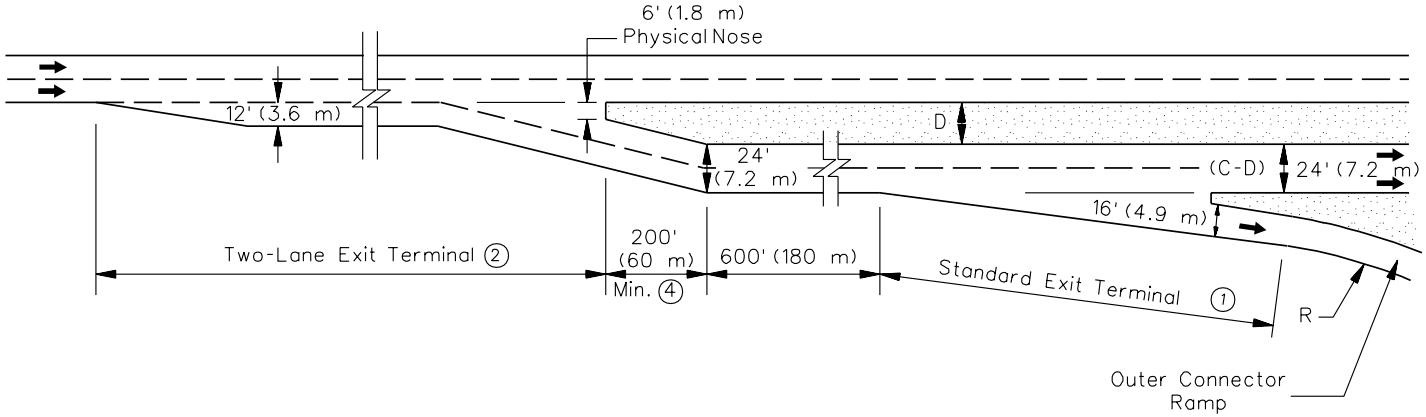

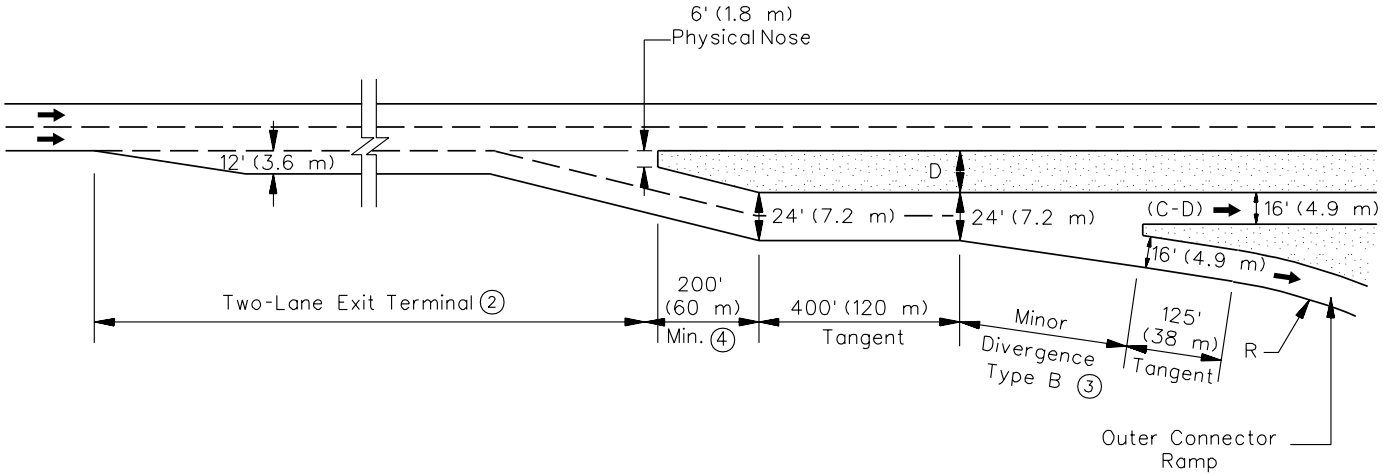

COLLECTOR-DISTRIBUTOR EXIT TERMINAL DESIGNS

Figure 37-4D

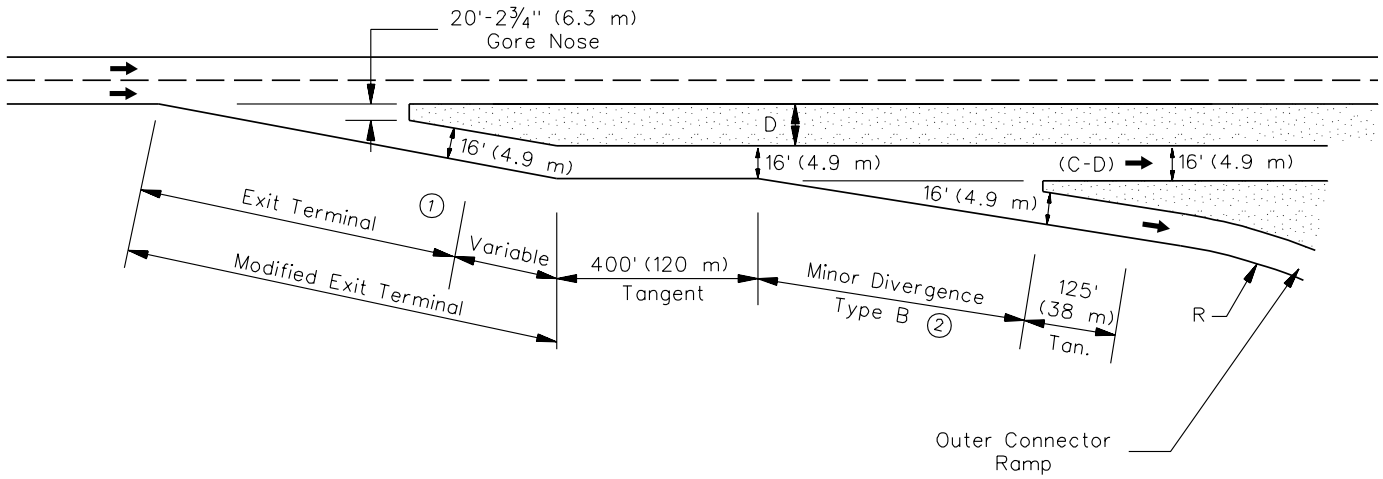

Notes:

1. *See Figure 37-6A for standard exit design.*
2. *See Figure 37-6C for two-lane exit design.*
3. *See Figure 37-6R for minor divergence designs.*
4. *D = median width, see Figure 37-4B. Note minimum lengths may increase median width "D."*
5. *Develop cross sections for all critical locations during the preparation of the IDS.*

COLLECTOR-DISTRIBUTOR EXIT TERMINAL DESIGNS

Figure 37-4D
(Continued)

37-4.03 High-Speed Directional/Semi-Directional Roadways

High-speed directional or semi-directional roadways, like ramps, accommodate turning movements at interchange facilities, but they are distinguished from ramps in that they provide two-lane, one-way operations. These roadways are provided for large traffic movements that exceed the capacity of a one-lane ramp, for route continuity, or for improved traffic operations. For route continuity purposes, directional roadways may carry any route including expressways and freeways. These roadways are directional or semi-directional in alignment and generally have major divergence and convergence at their terminals. Design criteria for these roadways are:

1. Directional Roadways. The design speed of directional roadways, in rural areas may be 60 mph or 70 mph (100 km/h or 110 km/h). In urban areas, directional roadways may be designed for 50 mph, 55 mph, or 60 mph (80 km/h, 90 km/h, or 100 km/h) depending on traffic volumes, right-of-way, motorist expectations, and importance of route. In all cases, the maximum superelevation rate is 6%. Shoulder widths are the same as the mainline roadway.

2. Semi-Directional Roadways. Desirably, use the criteria for directional roadways. However, use minimum design speeds, 55 mph (90 km/h) in rural areas and 50 mph (80 km/h) in urban areas. Where two-lane roadways are required for capacity or route continuity, the maximum superelevation rate is 6%. However, where a two-lane roadway is desirable because of the long design length of a single-lane ramp, a maximum superelevation rate of 8% may be used.

37-4.04 Design Speed

Figure 37-4E provides the recommended ranges of ramp design speeds based on the design speed of the mainline. In addition to Figure 37-4E, consider the following when selecting the ramp design speed:

1. Loop Ramps. Design speeds in the middle and high ranges are generally not attainable for loop ramps. The following apply to loop ramps:

   - For loop ramps on collector-distributor roadways or in restricted urban conditions, the minimum design speed for loops should be 25 mph (40 km/h).

   - Where the truck ADT is greater than 15%, use a minimum design speed of 30 mph (50 km/h) for the initial curve after the exit curve; see Figure 37-3N.

   - For rural loop ramps, a 30 mph (50 km/h) design speed is preferred.

   - Use a design speed of 40 mph (60 km/h) for cloverleaf interchange loop ramps between freeways.

Mainline Design Speed	US Customary					Metric			
	50 mph	55 mph	60 mph	65 mph	70 mph	80 (km/h)	90 (km/h)	100 (km/h)	110 (km/h)
	Ramp Design Speed (mph)					Ramp Design Speed (km/h)			
High Range	40	45	45-55*	50-55*	50-70*	60	70	70-90*	80-110*
Middle Range	35	40	45	45	50	50	60	70	80
Low Range	25	25-30	25-30	30	30	40	40-50	40-50	50

* *In general, design speeds greater than 50 mph (80 km/h) apply to two-lane directional or semi-directional roadways within interchanges.*

RAMP DESIGN SPEEDS

Figure 37-4E

2. Outer Connector Ramps. The design speed for the outer connector ramp of a rural cloverleaf interchange should be 50 mph (80 km/h). Where a wrap-around type ramp is used, use a minimum design speed of 45 mph (70 km/h) for the center curve.

3. Semi-Directional Ramps. Use design speeds in the middle to high ranges for semi-directional ramps. Do not use a design speed less than 40 mph (60 km/h).

4. Directional Ramps. These include both diagonal ramps at a diamond interchange and ramps at a directional interchange. The design speed should desirably be in the high range.

5. Directional Roadways. Two-lane directional roadways within an interchange are typically designed with a design speed in the high range.

6. Controlled Terminals. If a ramp is terminated at an intersection with a stop or signal control, the design speeds in Figure 37-4E are not applicable to a portion of the ramp near the intersection. The design speed on the ramp near the crossroad intersection is usually assumed to be 40 mph (60 km/h) but can be a minimum of 25 mph (40 km/h) in restricted areas.

7. Variable Speeds. The ramp design speed may vary based on the two design speeds of the intersecting roadways. Use a higher design speed on the portion of the ramp near the higher speed facility and a lower design speed near the lower speed facility. When using variable design speeds, the maximum speed differential between controlling design elements (e.g., horizontal curves, vertical curves) should not be greater than 10 to 15 mph (20 to 30 km/h). The designer must ensure that sufficient deceleration distance is available between design elements with varying design speeds (e.g., two horizontal curves).

Figure 37-4F presents geometric design criteria for interchange ramps based on the selected design speed (e.g., sight distance, horizontal alignment and vertical alignment). These are discussed in detail in the following sections.

37-4.05 Sight Distance

The designer should review the ramp cross-section, horizontal alignment, and vertical alignment to ensure that stopping sight distance is continuously provided along the interchange ramp. Because ramps are composed of curves of various radii and design speeds, sight distance requirements may vary over the length of the ramp. Figure 37-4F provides a summary of the geometric criteria for ramps, including stopping sight distance.

37-4.06 Cross Section Elements

Figure 37-4G presents the typical cross section criteria for tangent and superelevated portions of ramps. The following also applies to the ramp cross section:

1. Width. The minimum width of a one-way, one-lane ramp is 30 ft (9.1 m). The 30 ft (9.1 m) width includes a 6 ft (1.8 m) left shoulder (4 ft (1.2 m) paved), an 8 ft (2.4 m) right shoulder (6 ft (1.8 m) paved), and a 16 ft (4.9 m) paved traveled way. This arrangement is illustrated in the ramp cross sections in Figure 37-4G. For multilane directional roadways, the cross sectional width is the same as the freeway design (e.g., 24-ft (7.2-m) traveled way width plus shoulders); see Chapter 44.

2. Pavement Design. For pavement design information which is also applicable to ramps, see Chapter 54.

3. Cross Slope. For tangent sections, the 16 ft (4.9 m) traveled way is sloped unidirectionally at 3/16″/ft (1.5%) towards the right shoulder. Shoulder cross slopes, for both the paved and unpaved portions, are typically 1/2″/ft (4%). The left shoulder is typically sloped away from the traveled way. For all superelevated ramps, the ramp traveled way and shoulders are sloped as discussed for open roadways conditions in Section 32-3.

4. Curbs. If curb and gutter is required, place it on the outside edge of the full-width paved shoulders. See Chapters 34 and 38 for information on the use of curbs.

5. Bridges and Underpasses. Carry the full paved width of the ramp, including the paved shoulders over a bridge. See Chapters 38 and 39 when determining the clear ramp width for an underpass.

6. Side Slopes/Ditches. For the ramp proper, use a side slope of 1V:4H or flatter. Chapters 34 and 38 provide the applicable design information for side slopes and ditches.

GEOMETRIC REQUIREMENTS							
RAMP DESIGN SPEED (mph)		50	45	40	35	30	25
STOPPING SIGHT DISTANCE (ft)		425	360	305	250	200	155
HORIZONTAL ALIGNMENT							
Minimum Radius (ft)	8%	760	600	465	350	250	170
for e = e_{max}	(6%)	(835)	(660)	(510)	(380)	(275)	(185)
Minimum Length of Arc (ft)		See Figure 37-4H					
SUPERELEVATION							
e_{max}		8% (6%)					
Superelevation Runoff Lengths (ft)	8%	255	235	220	205	195	185
for e = e_{max}	(6%)	(190)	(180)	(165)	(155)	(145)	(135)
VERTICAL ALIGNMENT							
Maximum Grades		+4% and -6%					
Crest Vertical Curves K-values		84	61	44	29	19	12
Sag Vertical Curves K-values		96	79	64	49	37	26

GENERAL NOTES:

- Where radii greater than 760 ft (835 ft) are used, determine the ramp superelevation rate according to Section 32-3.
- Values in parentheses (e_{max} = 6%) are applicable to areas with snow and ice conditions and/or highly congested traffic operations.

SUMMARY OF ROADWAY DESIGN CRITERIA
FOR INTERCHANGE RAMPS
(US Customary)

Figure 37-4F

GEOMETRIC REQUIREMENTS						
RAMP DESIGN SPEED (km/h)		80	70	60	50	40
STOPPING SIGHT DISTANCE (m)		129	105	83	64	47
HORIZONTAL ALIGNMENT						
Minimum Radius (m)	8%	230	180	175	85	50
for e = e_{max}	(6%)	(255)	(195)	(135)	(90)	(55)
Minimum Length of Arc (m)		See Figure 37-4H				
SUPERELEVATION						
e_{max}		8% (6%)				
Superelevation Runoff Lengths (m)	8%	80	70	65	60	55
for e = e_{max}	(6%)	(60)	(55)	(50)	(45)	(40)
VERTICAL ALIGNMENT						
Maximum Grades		+4% and -6%				
Crest Vertical Curves K-values		26	17	11	7	4
Sag Vertical Curves K-values		30	23	17	12	8

GENERAL NOTES:

- Where radii greater than 230 m (255 m) are used, determine the ramp superelevation rate according to Section 32-3.
- Values in parentheses (e_{max} = 6%) are applicable to areas with snow and ice conditions and/or highly congested traffic operations.

SUMMARY OF ROADWAY DESIGN CRITERIA
FOR INTERCHANGE RAMPS
(Metric)

Figure 37-4F

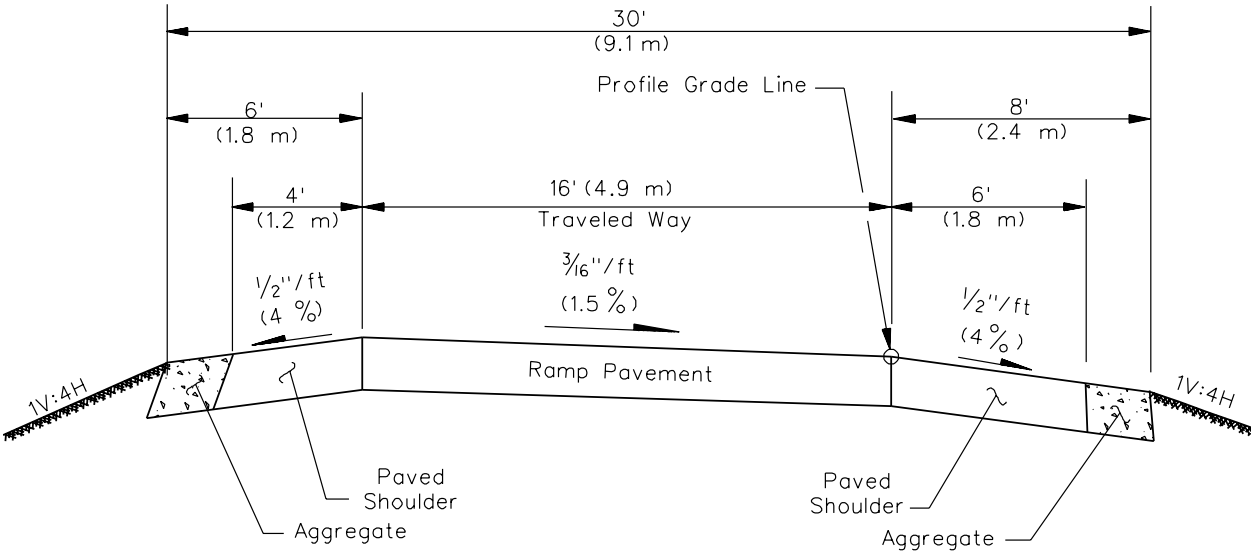

TANGENT SECTION

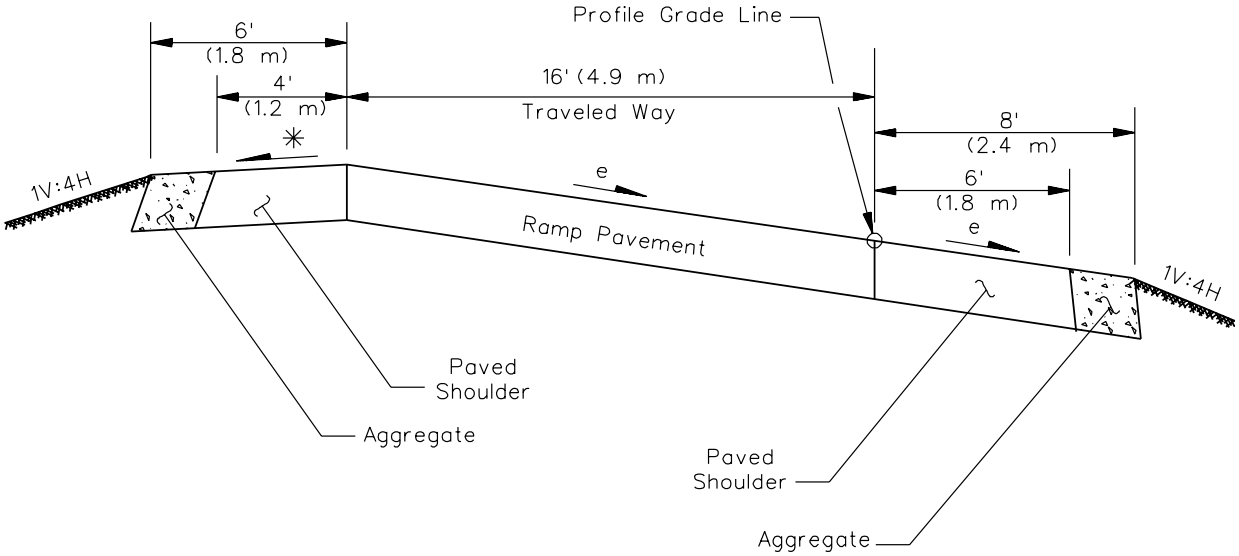

SUPERELEVATED SECTION

**See Section 32-3 for maximum shoulder break.*

TYPICAL RAMP CROSS SECTIONS
Figure 37-4G

7. Clear Zones. Measure the clear zone from the edge of the traveled way on both sides of the ramp using the criteria in Section 38-3.

8. Right-of-Way. The right-of-way adjacent to the ramp is fully access controlled and the right-of-way is fenced.

37-4.07 Horizontal Alignment

37-4.07(a) Theoretical Basis

Establishing horizontal alignment criteria for any highway element requires a determination of the theoretical basis for the various alignment factors. These include the side-friction factor (f), the distribution method between side friction and superelevation, the relative longitudinal gradients, and the distribution of the superelevation runoff length between the tangent and horizontal curve. For horizontal alignment on the ramp proper, the theoretical basis will be open-roadway conditions as discussed in Chapter 32. In summary, this includes:

- relatively low side-friction factors (i.e., a relatively small level of driver discomfort);
- the use of AASHTO Method 5 to distribute side friction and superelevation;
- relatively flat longitudinal gradients for superelevation runoff lengths; and
- distributing 67% of the superelevation runoff length on the tangent and the remainder on the horizontal curve.

The following sections discuss the specific horizontal alignment criteria for ramps.

37-4.07(b) Design Controls

The following will apply to the horizontal alignment of ramps:

1. Minimum Curve Radii. Figure 37-4F provides the minimum curve radii based on ramp design speed, open-roadway conditions, and e_{max}.

2. Superelevation Rates. For most areas, the maximum superelevation rate on the ramp is e_{max} = 8%. For areas with snow and ice conditions and/or areas with high congestion, the maximum superelevation rate is e_{max} = 6%. For two-lane directional roadways within an interchange, use an e_{max} = 6% throughout the State.

   Because of the typically restricted site conditions for interchanges (e.g., the need to minimize right-of-way), the majority of horizontal curves on ramps will be superelevated at e_{max}. Where practical, curves flatter than R_{min} should be used. For these curves, the

design superelevation rate will be determined from the applicable e_{max} figure in Section 32-3 for open roadways.

3. Trucks. Where there are a significant number of trucks on loop ramps, the designer may need to consider how the design may increase the rollover potential for large trucks. To reduce this potential, consider using flatter curve radii on the second curve. Modiifed radii can be obtained by reducing the superelevation rates and/or lowering the side-friction factors. For additional guidance on modified truck friction factors, see Transportation Research Record No. 1385 entitled "Interchange Ramp Geometrics — Alignment and Superelevation Design."

4. Superelevation Runoff Lengths. Open-roadway conditions, as discussed in Section 32-3, apply to transitioning the ramp from its normal cross slope on tangent to the needed superelevation on curves. The relative longitudinal slopes in Figure 32-3F apply to ramps. Based on these gradients, $e = e_{max}$, and a 16 ft (4.9 m) ramp traveled way, Figure 37-4F presents the superelevation runoff lengths for horizontal curves on ramps.

5. Ramp Baseline. Typically, the right edge of the ramp traveled way is used for horizontal and vertical control, and the control point for the axis of rotation.

6. Shoulder Superelevation. The criteria presented in Section 32-3 for superelevating the high and low side of shoulders for open roadways will apply to superelevated curves on ramps.

7. Reverse Curves. Reverse curves may be required to:

   - meet restrictive right-of-way conditions,
   - provide for a better location of the intersection on the crossroad, and/or
   - provide a preferred angle of intersection with the crossroad.

   Design the reverse curves with a minimum tangent section consisting of a continuously rotating plane between the curves. This continuously rotating plane will determine the necessary distance between the PT and the succeeding PC and is based on the 67% superelevation runoff lengths for each curve. See Section 32-3 for more information on superelevating reverse curves.

8. Sight Distance. Section 32-4 presents the criteria for sight distance around horizontal curves based on the curve radii and design speed. These criteria also apply to curves on ramps.

9. Controlled Ramp Termini. Exit ramps may end at a controlled intersection — stop control or signal control. If horizontal curves on the ramps are near the intersection, a design speed for the curve should be selected which is appropriate for expected operations at the curve. See Section 36-1.05(b) for more information.

37-4.07(c) Length of Arc

Where compound arcs of decreasing radius are used on exit ramps, the arcs should have sufficient length to enable motorists to decelerate at a reasonable rate over the range of design speeds. See Figure 37-4H. The radii of the flatter arc compared to the radii of the sharper arc should not exceed a ratio of 2:1 to prevent abruptness in operation and appearance.

Comparable radii and length controls may be used on entrance ramps with compound arcs of increasing radii. However, for entrance ramps, the 2:1 ratio of compound curves is not critical because the vehicle is accelerating into a curve with a larger radius or into a tangent section.

US Customary							
Radius (ft)	100	150	200	250	300	400	500 or more
Minimum (ft)	40	50	60	80	100	120	140
Desirable (ft)	60	70	90	120	140	180	200
Metric							
Radius (m)	30	50	60	75	100	125	150 or more
Minimum (m)	12	15	20	25	30	35	45
Desirable (m)	20	20	30	35	45	55	60

Note: These lengths are applicable where the ramp curve is followed by a curve 1/2 the radius or preceded by a curve of double radius.

ARC LENGTHS FOR COMPOUND CURVES
Figure 37-4H

37-4.08 <u>Vertical Alignment</u>

37-4.08(a) Grades

Values of limiting gradients are +4% to -6% regardless of the design speed but, for any one ramp, the selected gradient is dependent upon several factors. These include:

- Where steep grades are required, locate them within the center portion of the ramp.
- Locate freeway ramp terminals and approach areas near intersections on as flat a grade as practical; see Section 37-5 for grades near ramp/crossroad intersections and Section 37-6 for freeway ramp terminal grades.
- Ramp grades may affect the location of ramp termini. This may be a concern where the ramp intersects the crossroad at an angle of 70° or less. Section 37-5.01 further discusses the location of ramp/crossroad intersections.

37-4.08(b) Vertical Curvature

Design vertical curves on ramps to meet the stopping sight distance criteria based on the ramp design as presented in Chapter 33. Figure 37-4F provides the K-values for both crest and sag vertical curves. The ramp profile often assumes the shape of the letter S with a sag vertical curve at one end and a crest vertical curve at the other. In addition, design the vertical curvature adjacent to the standard exit and entrance terminals using a design speed of 50 mph (80 km/h) or greater.

37-4.08(c) Cross Sections Between Adjacent Ramps

Where the horizontal alignment of a ramp is designed to be parallel to an adjacent ramp (e.g., parclo, cloverleaf, trumpet interchanges), first establish the profile of the loop ramp and then set the profile of the outer ramp to be approximately parallel to the inner-loop ramp profile. This is accomplished by calculating the left-edge elevations of the loop ramp and matching those elevations for the left-edge elevations of the outer ramp. To ensure the median edges between the two ramps are approximately level, develop a typical cross section during the preparation of the IDS.

37-4.09 Roadside Safety

The criteria in Chapter 38 (e.g., clear zones, barrier warrants, length of need) will apply to the roadside safety design of interchange ramps.

37-5 RAMP/CROSSROAD INTERSECTIONS

37-5.01 General Design Criteria

At diamond and partial cloverleaf interchanges, the ramp will terminate or begin at a controlled intersection on the crossroad, either with a stop sign or traffic signal. In general, the intersection should be designed as described in Chapter 36. Consider the following in the design of ramp/crossroad intersections:

1. Length of Left-Turn Lanes. For diamond interchanges, typically the minimum distance between ramp/crossroad intersections is set by the length of overlapping left-turn lanes. Note that in rural areas, the minimum design speed for determining the length of left-turn lanes on the crossroad is 55 mph (90 km/h). Left-turn lanes are usually designed with straight-line tapers when the crossroad goes over the freeway and with reverse curves when the crossroad goes underneath the freeway; see Figure 37-5A. For compressed diamond interchanges, the length of the left-turn lanes will be determined based on left-turn storage requirements, see Section 36-3.02 and Figure 37-5B. The left-turn control radii into the ramps are set at the ends of the left-turn lanes. This also determines the location of the ramp baselines.

2. Turn Lanes on Ramps. Exclusive turn lanes are often required at the end of an exit ramp. Chapter 36 provides information on the design of turn lanes at intersections which are also applicable for ramps.

3. Signalization. Where queuing at one intersection is long enough to effect operations at another, the two intersections may need a larger separation, interconnected signals, or a six-phase overlap signal design.

4. Ramp Grades. Where the exit and entrance ramps intersect with the crossroad, design the first 150 ft to 200 ft (45 m to 60 m) of the ramp with a profile grade of 1.5% to 2%.

5. Crossroad Grades. Design the crossroad grades for a maximum of 2% through the ramp/ crossroad intersection.

6. Capacity. Ensure that sufficient capacity and storage for the ramp/crossroad intersection is available. This may require adding lanes at the intersection or on the ramp proper. The analysis must also consider the operational impacts of the traffic characteristics in either direction on the crossroad.

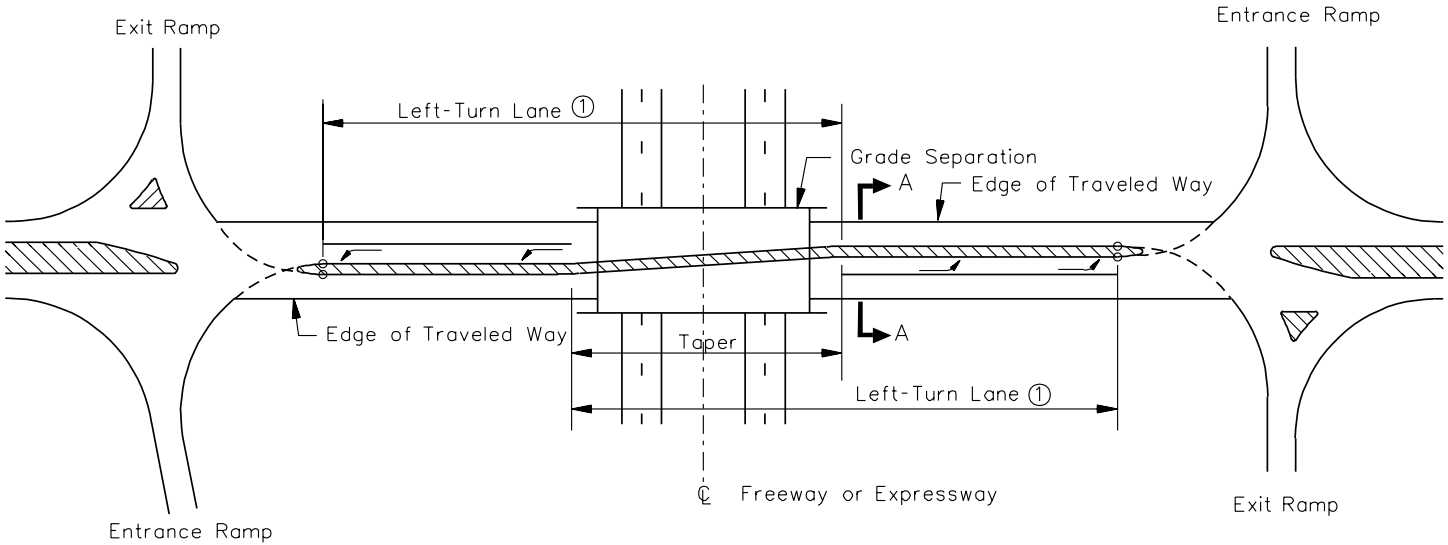

Notes:

1. *Determine the left-turn length on the crossroad using Section 36-3.02 and by assuming the distance needed for a stop condition.*
2. *Set the location of left-turn control radii to and from the crossroad at the same crossroad station.*
3. *See Figure 37-5C for Section A-A.*

LEFT-TURN LANES ON CROSSROADS
(Diamond Interchanges)

Figure 37-5A

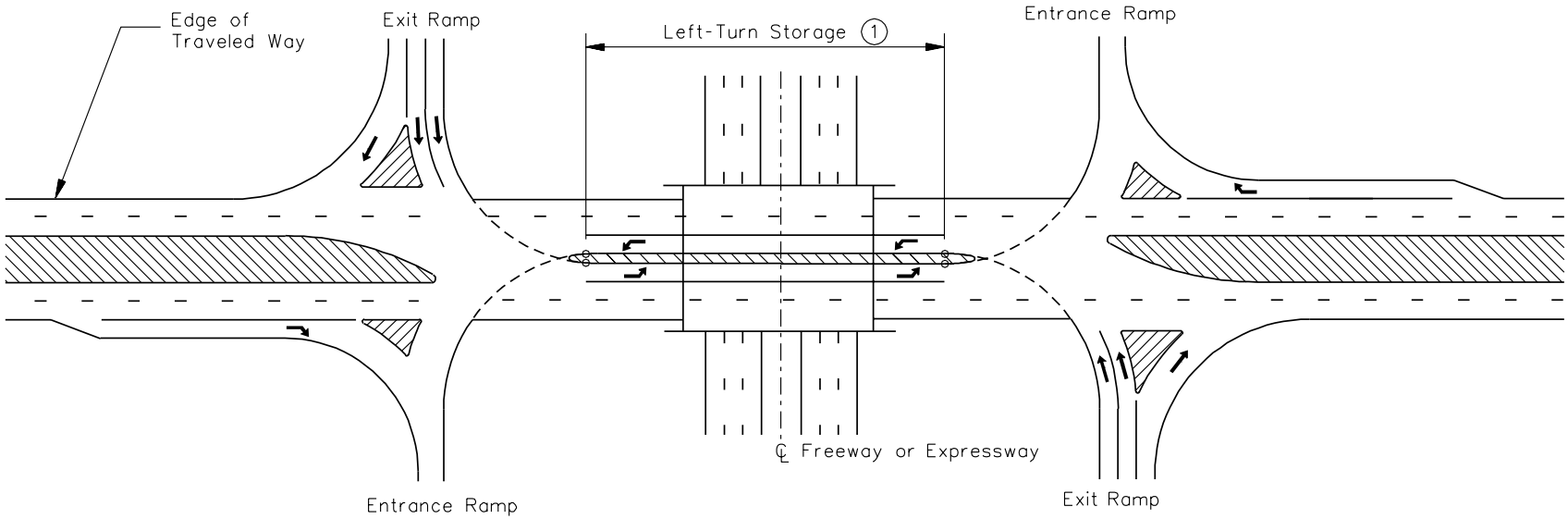

Notes:

1. *Determine the left-turn length on the crossroad using Section 36-3.02. For this design, the storage requirements will govern.*
2. *Set the location of left-turn control radii to and from the crossroad at the same crossroad station.*
3. *For new construction, use a 30 ft (9.0 m) minimum median width on the crossroad.*

LEFT-TURN LANES ON CROSSROAD
(Compressed Diamond Interchange)

Figure 37-5B

7. Sight Distance. Section 36-6 discusses the criteria for intersection sight distance. These criteria also apply to the ramp/crossroad intersection. Give special attention to the location of the bridge piers, abutments, sidewalks, bridge railing, roadside barrier, etc.; these elements may present major sight distance obstacles. The bridge obstruction and the required intersection sight distance may result in the relocation of the ramp/crossroad intersection further from the structure. Also, the crest vertical curve on the crossroad may need to be lengthened to provide adequate sight distance in the vertical plane.

8. Wrong-Way Movements. Wrong-way movements may originate at the ramp/crossroad intersection onto an exit ramp. To minimize the probability of these movements, provide a raised-curb median on the crossroad and sign the ramp according to the *ILMUTCD*.

9. Crossroad Cross Section. For safety and capacity, the crossroad through an interchange should be as wide as practical. The minimum cross section is an 18 ft (5.5 m) raised-curb median separating two 14 ft (4.2 m) lanes and 8 ft (2.4 m) outside shoulders. See Figure 37-5C and Section 37-2.14 for additional information on the crossroad dimensions.

10. Design Vehicle. Radius returns and left-turn control radii for ramp/crossroad intersections should be designed using a WB-65 (WB-20) design vehicle, see Section 36-1.08.

37-5.02 Typical Intersection Designs

37-5.02(a) Diamond Interchange

Typical ramp/crossroad intersections at a diamond interchange are shown in Figures 37-5D, 37-5E, 37-5F, and 37-5G. The appropriate radius returns, based on the WB-65 (WB-20) design vehicle, are used to delineate the right-turning paths for the corner island design. For left turns from an exit ramp onto a 14 ft (4.2 m) traveled way, offset the median nose as shown in Figure 37-5H.

37-5.02(b) Two-Quadrant Partial Cloverleaf Interchange

The ramp/crossroad intersections with a two-quadrant partial cloverleaf interchange are similar in design to a channelized “T” intersection; see Figure 37-5I. To discourage wrong-way movements into the exit ramp, use a maximum left-turn control radius of 80 ft (24 m) from the crossroad into the entrance ramp and a 100 ft (30 m) left-turn control radius from the exit ramp onto the crossroad.

Figure 37-5J illustrates a typical median design on the crossroad for a parclo type interchange.

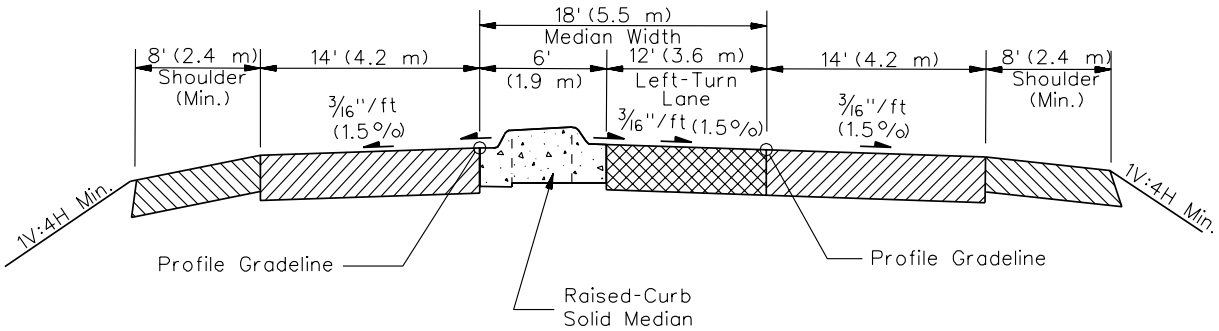

MINIMUM CROSS SECTION

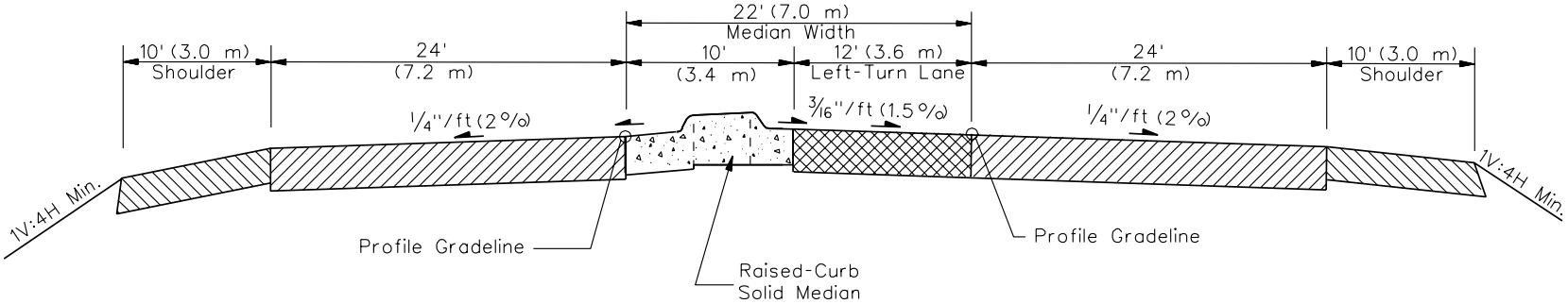

MULTILANE CROSS SECTION

Notes:

1. *See Figure 37-5A for location of Section A-A.*
2. *See Section 34-2.04(c) for curb type determination.*

TYPICAL CROSS SECTIONS FOR AN INTERCHANGE CROSSROAD
(Left-Turn Bay at Section A-A)

Figure 37-5C

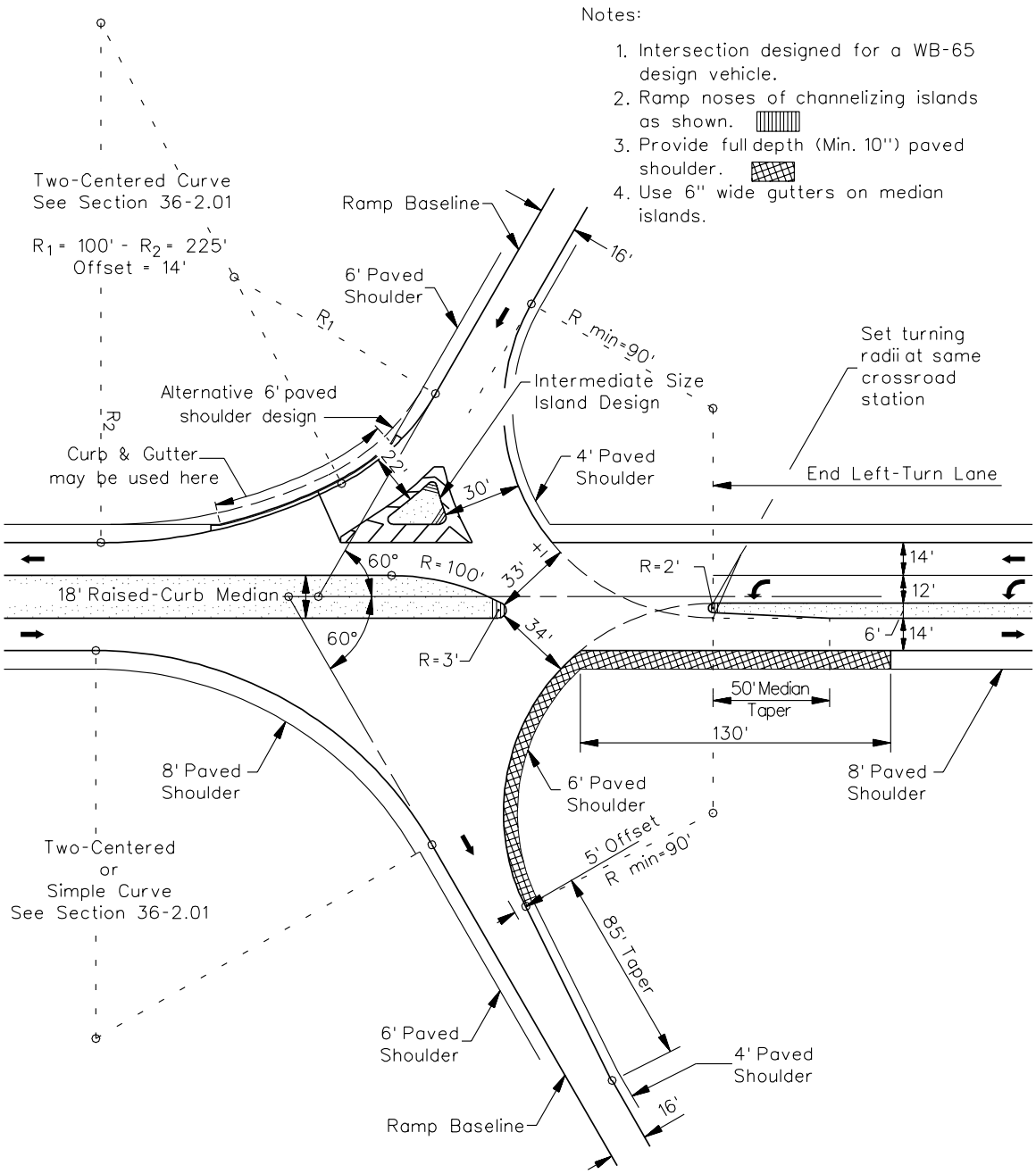

TYPICAL RAMP/CROSSROAD INTERSECTION — DIAMOND INTERCHANGE
(60° On Exit and 60° On Entrance)
(US Customary)

Figure 37-5D

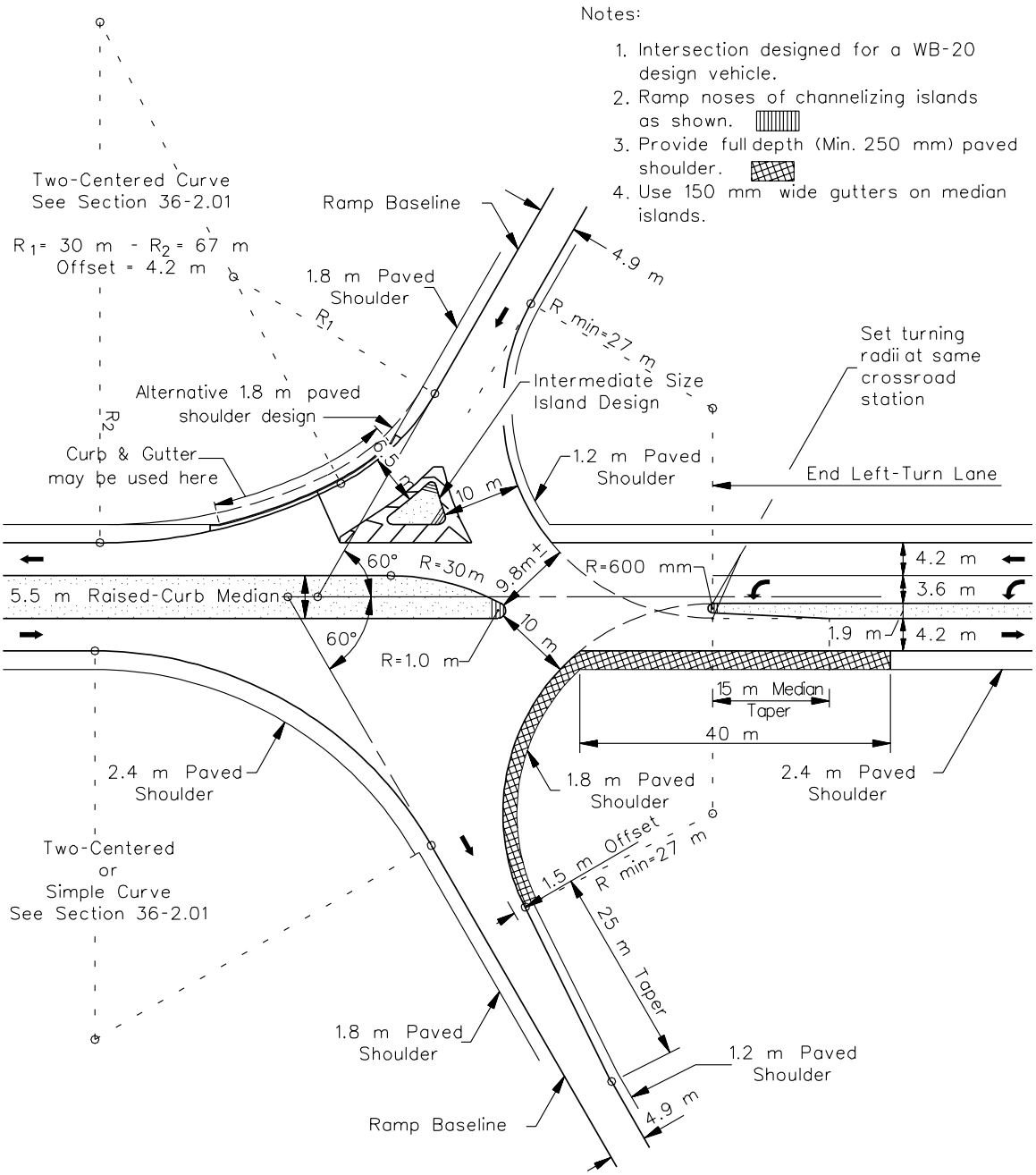

TYPICAL RAMP/CROSSROAD INTERSECTION — DIAMOND INTERCHANGE
(60° On Exit and 60° On Entrance)
(Metric)

Figure 37-5D

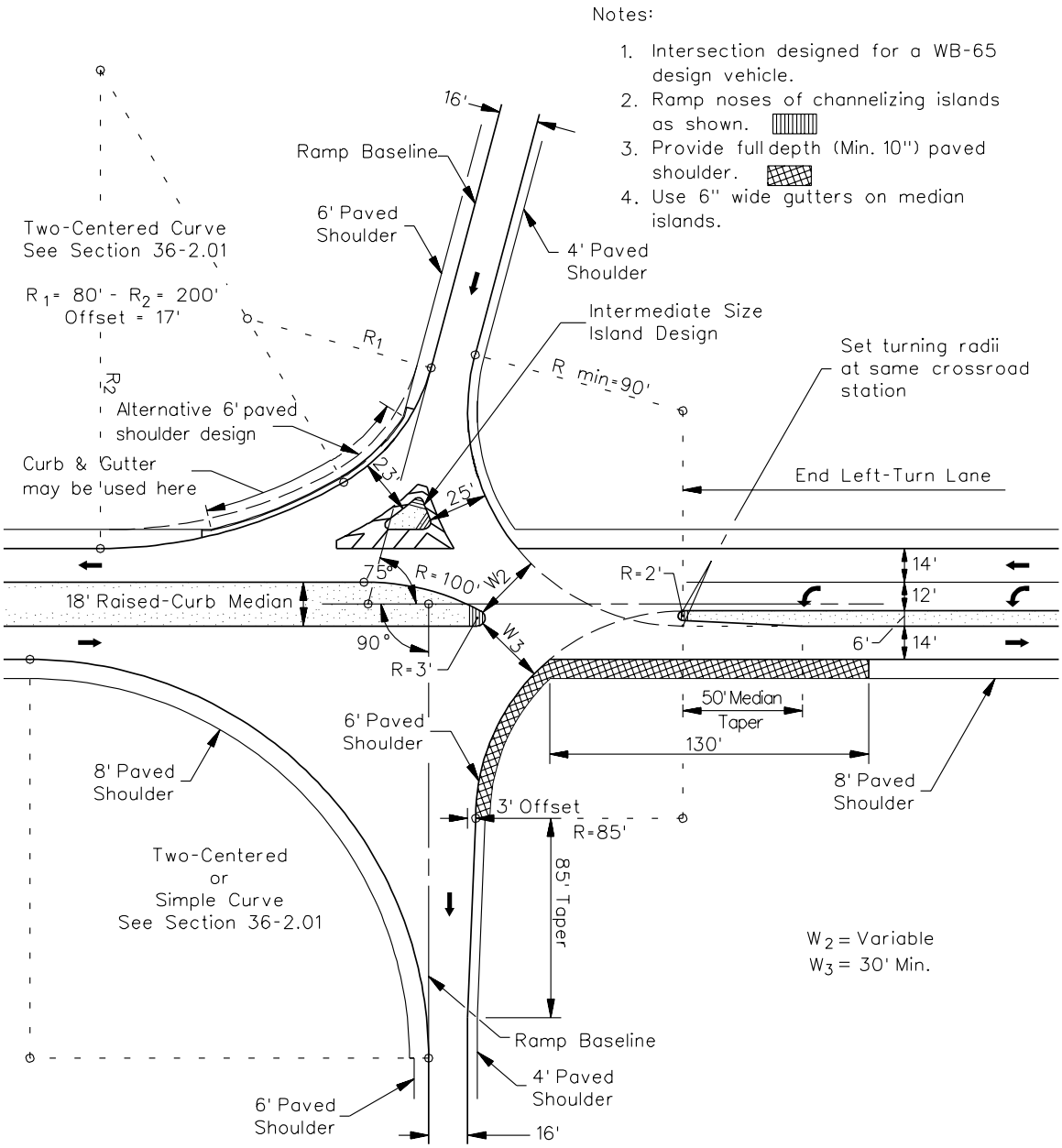

TYPICAL RAMP/CROSSROAD INTERSECTION — DIAMOND INTERCHANGE
(75° On Exit and 90° On Entrance)
(US Customary)

Figure 37-5E

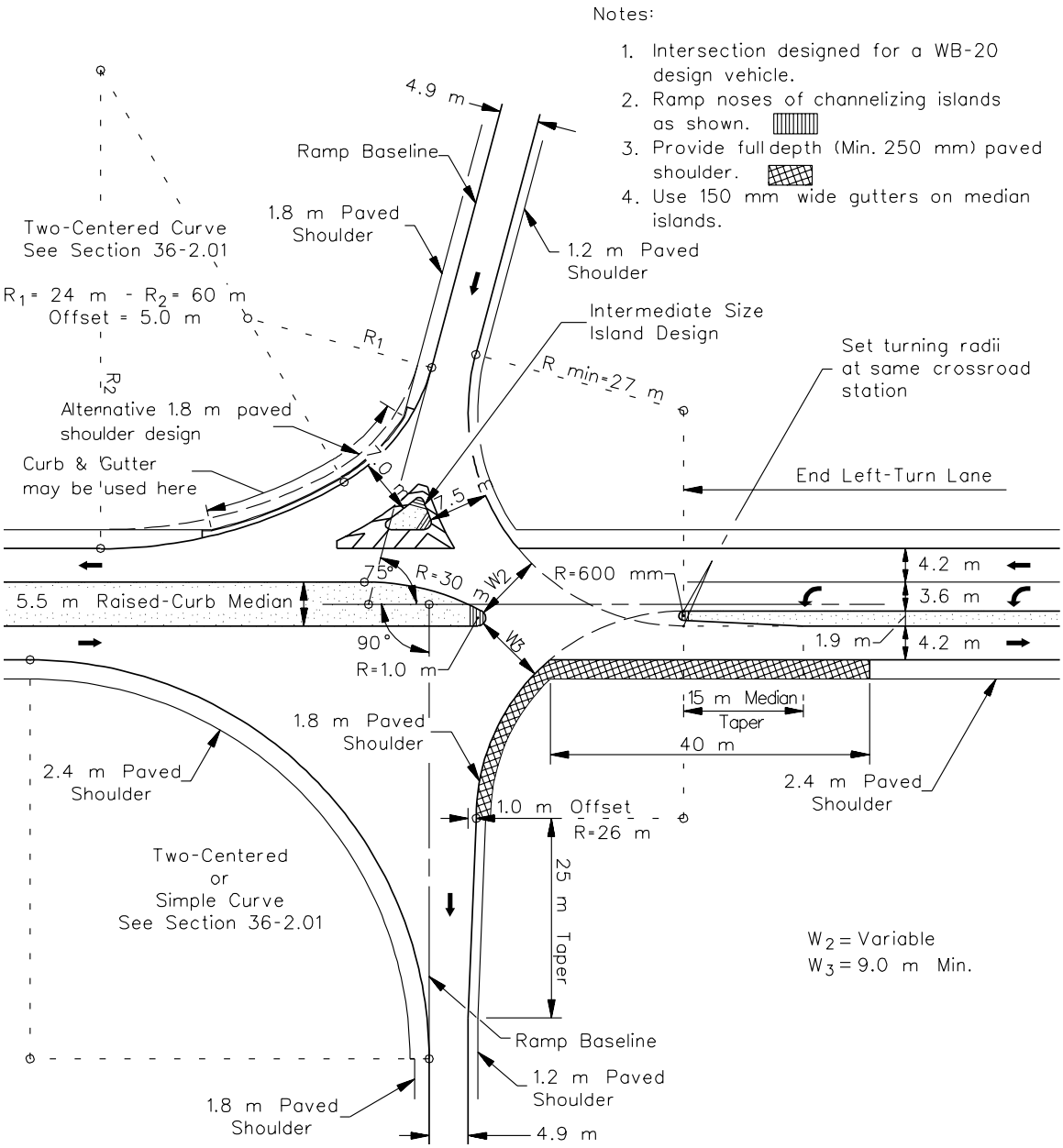

TYPICAL RAMP/CROSSROAD INTERSECTION — DIAMOND INTERCHANGE
(75° On Exit and 90° On Entrance)
(Metric)

Figure 37-5E

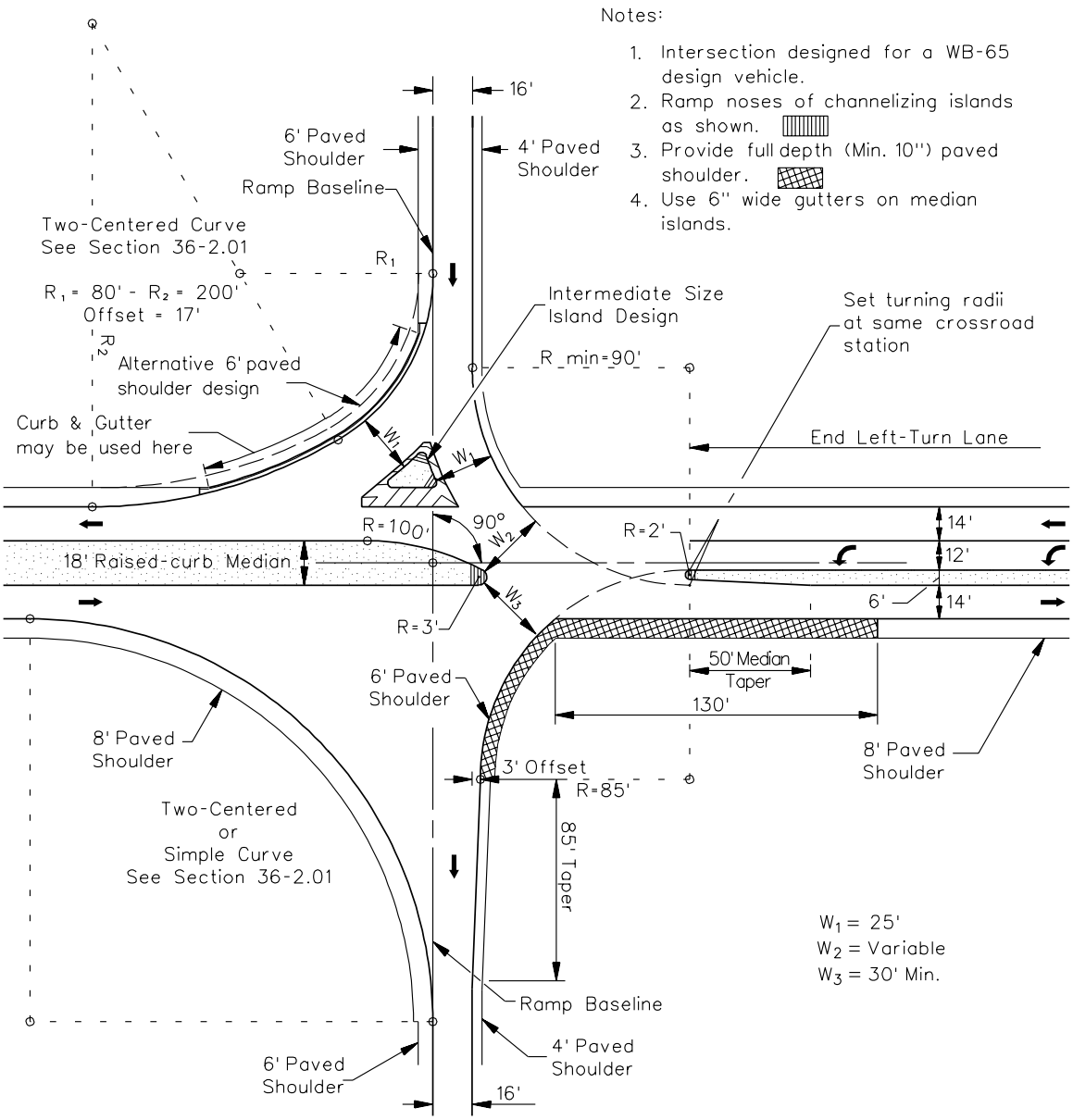

TYPICAL RAMP/CROSSROAD INTERSECTION — DIAMOND INTERCHANGE
(90° On Exit and 90° On Entrance)
(US Customary)

Figure 37-5F

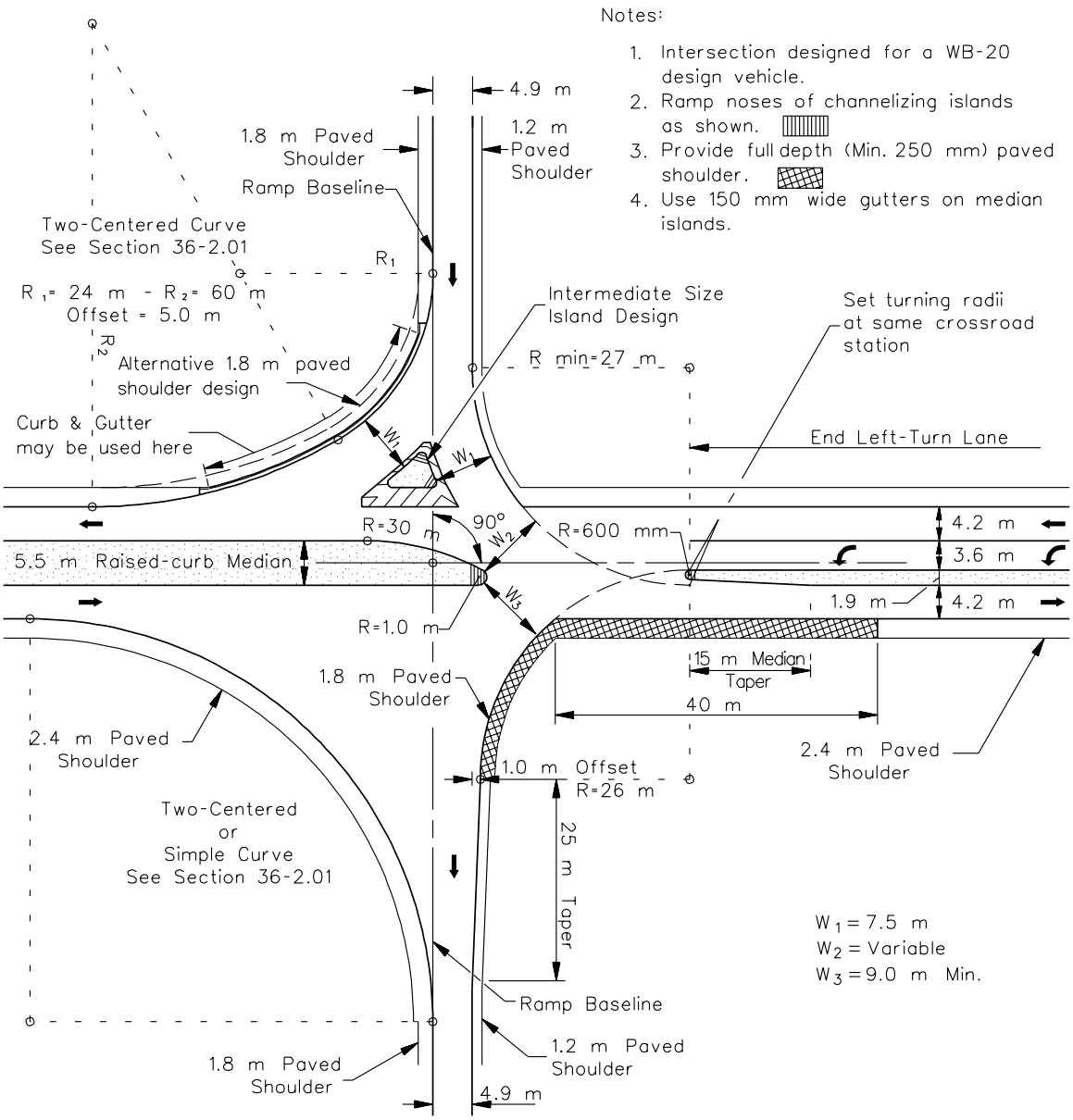

TYPICAL RAMP/CROSSROAD INTERSECTION — DIAMOND INTERCHANGE
(90° On Exit and 90° On Entrance)
(Metric)

Figure 37-5F

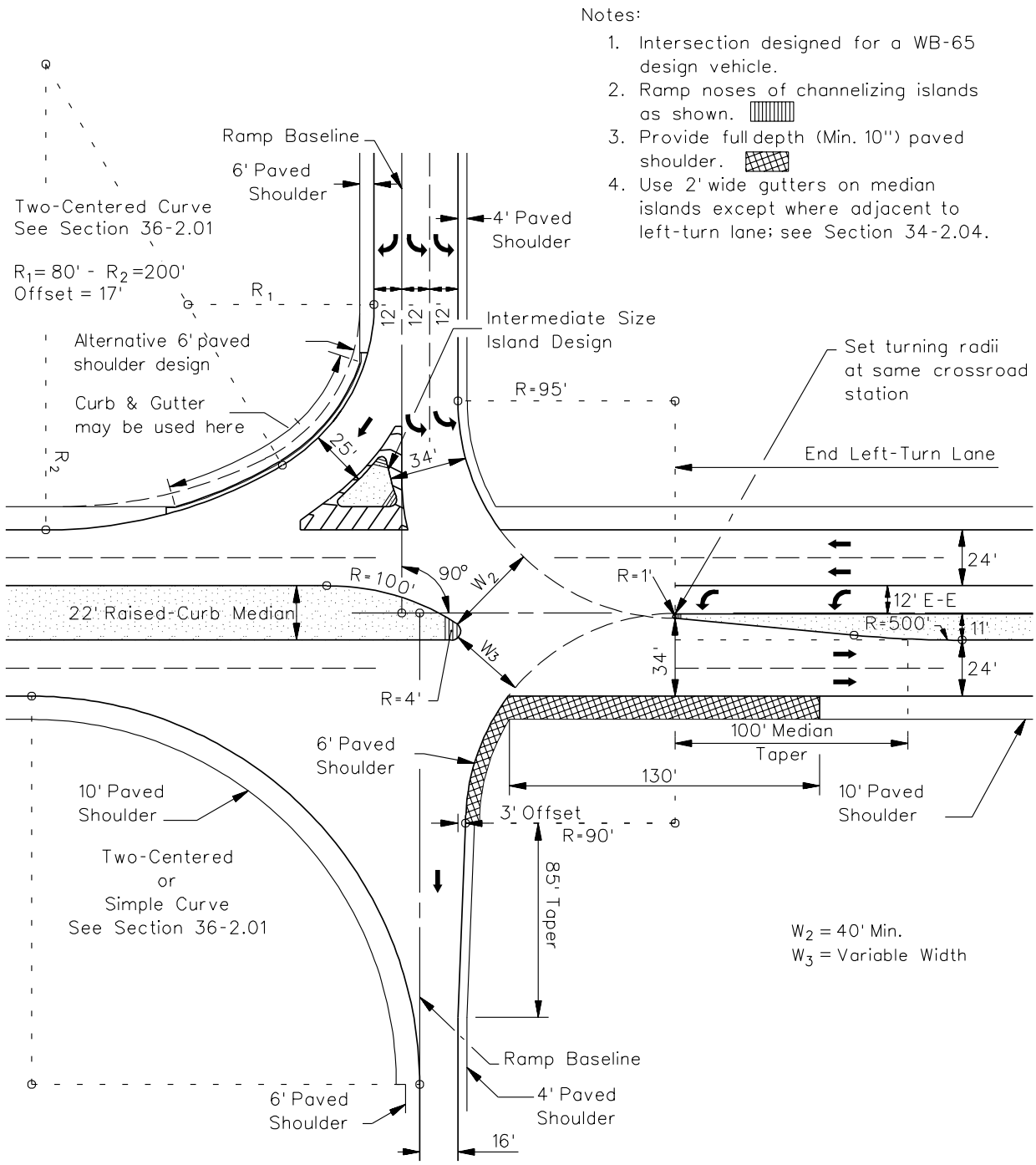

TYPICAL RAMP/CROSSROAD INTERSECTION — DIAMOND INTERCHANGE
(90° On Entrance and Exit and Dual Left Turns on Exit Ramp)
(US Customary)

Figure 37-5G

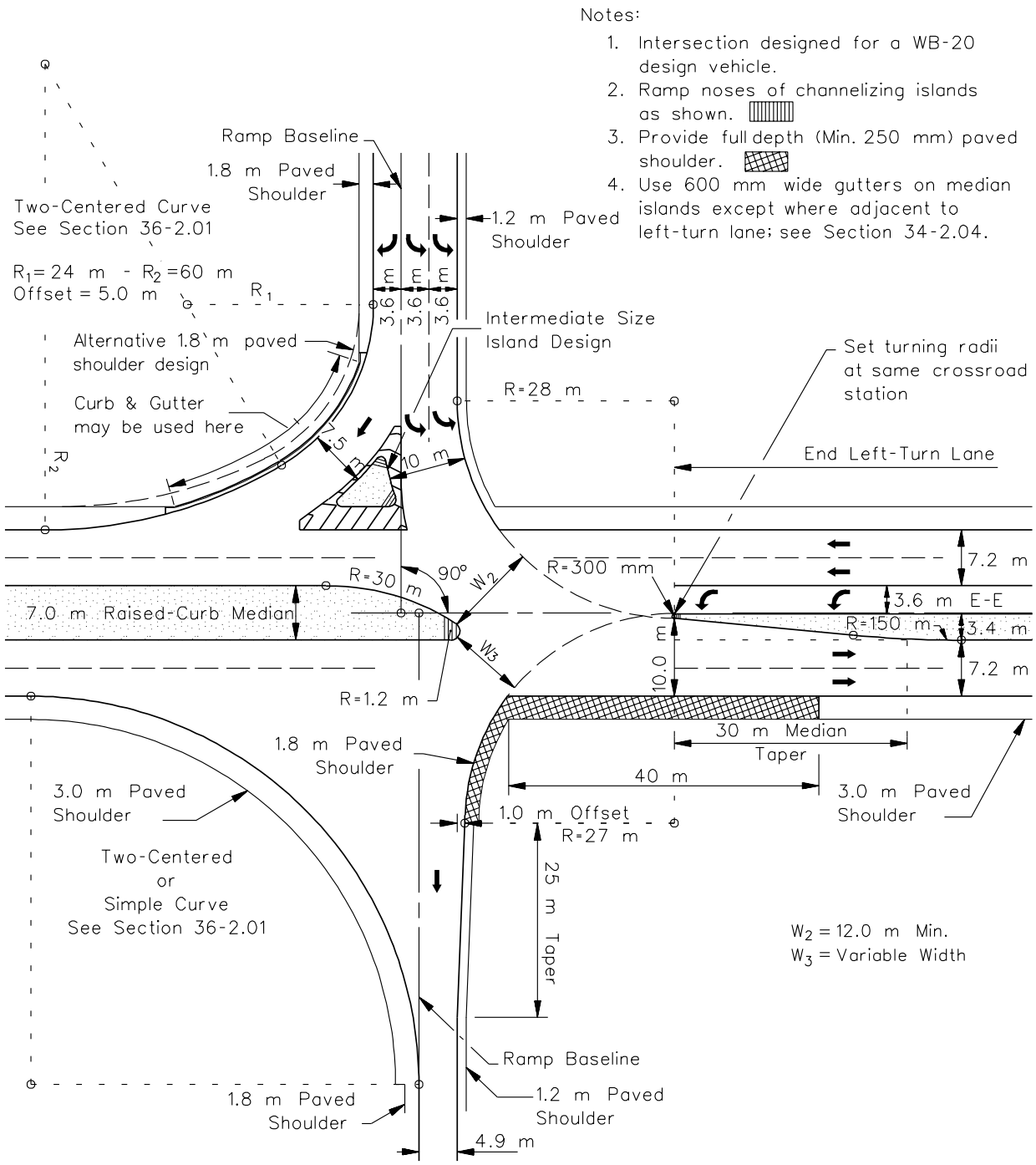

TYPICAL RAMP/CROSSROAD INTERSECTION — DIAMOND INTERCHANGE
(90° On Entrance and Exit and Dual Left Turns on Exit Ramp)
(Metric)

Figure 37-5G

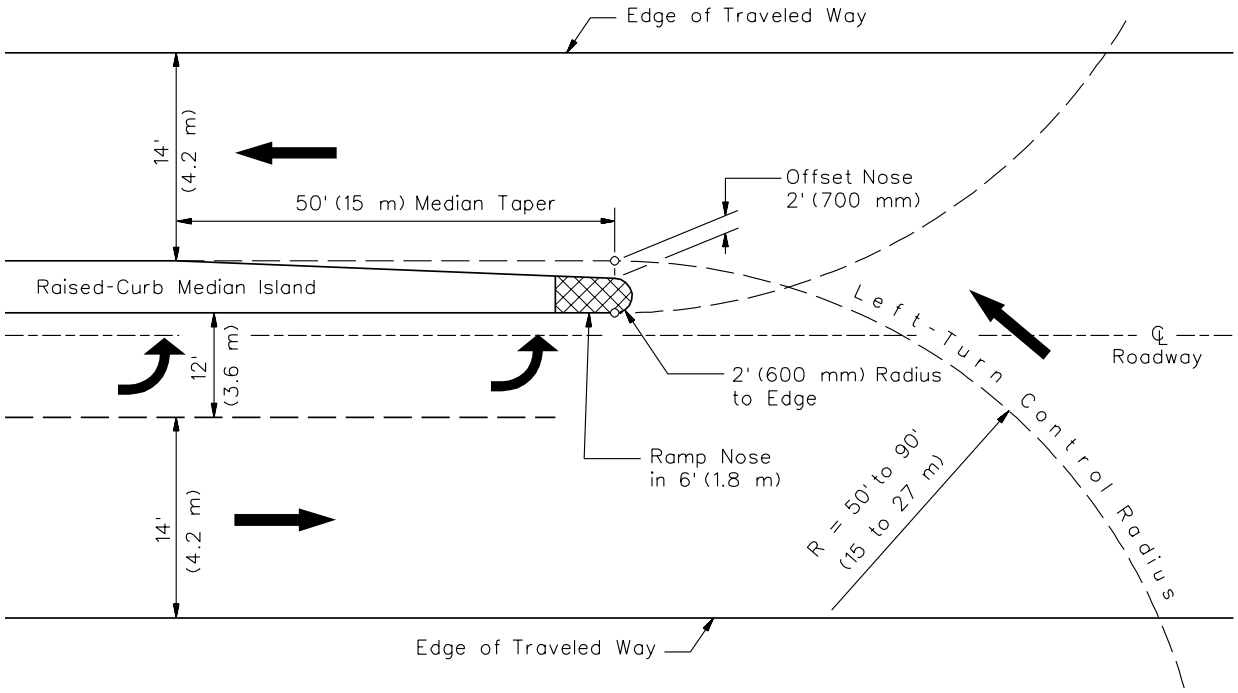

OFFSET MEDIAN NOSE DETAIL
(Interchange Crossroad)

Figure 37-5H

Notes:

1. Intersection designed for a WB-65 design vehicle.
2. Ramp noses of channelizing islands as shown.
3. The angle of ramp/crossroad intersection should be approximately 90°.
4. Use 6" wide gutters on median islands.
5. Use lighting to minimize wrong-way movements.

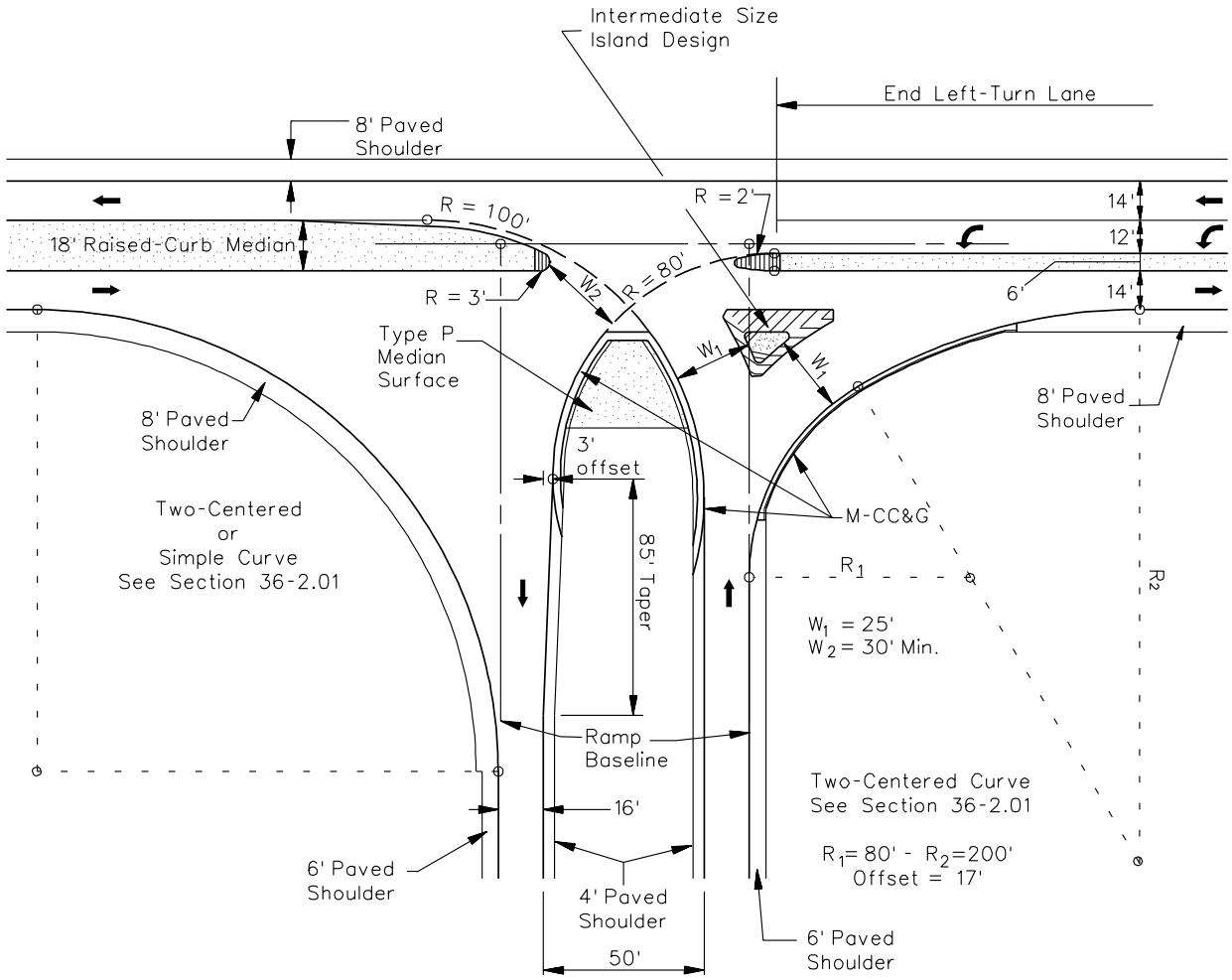

TYPICAL RAMP/CROSSROAD INTERSECTION — PARCLO INTERCHANGE
(Two-Quad)
(US Customary)

Figure 37-5I

Notes:

1. Intersection designed for a WB-20 design vehicle.
2. Ramp noses of channelizing islands as shown.
3. The angle of ramp/crossroad intersection should be approximately 90°.
4. Use 150 mm wide gutters on median islands.
5. Use lighting to minimize wrong-way movements.

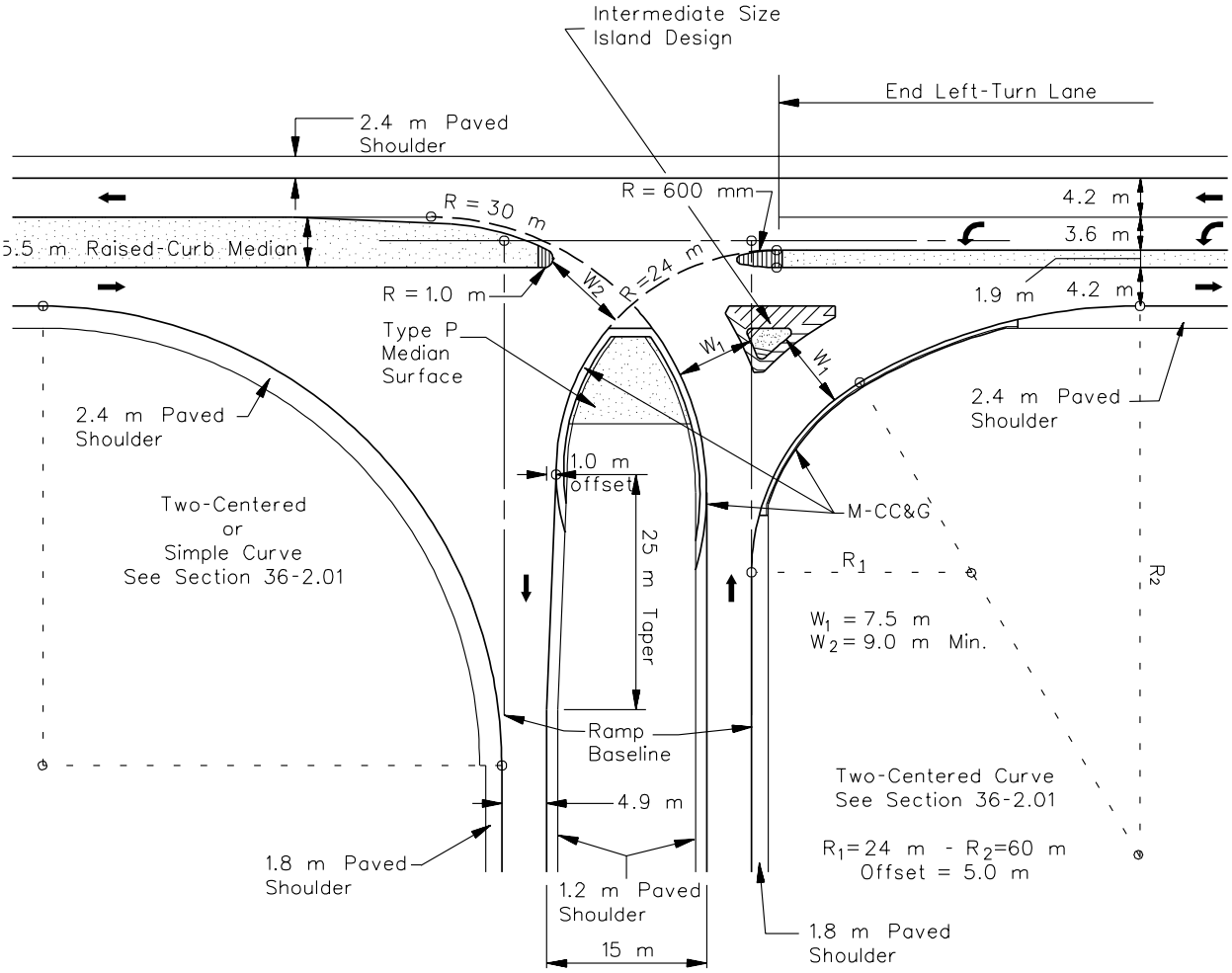

TYPICAL RAMP/CROSSROAD INTERSECTION — PARCLO INTERCHANGE
(Two-Quad)
(Metric)

Figure 37-5I

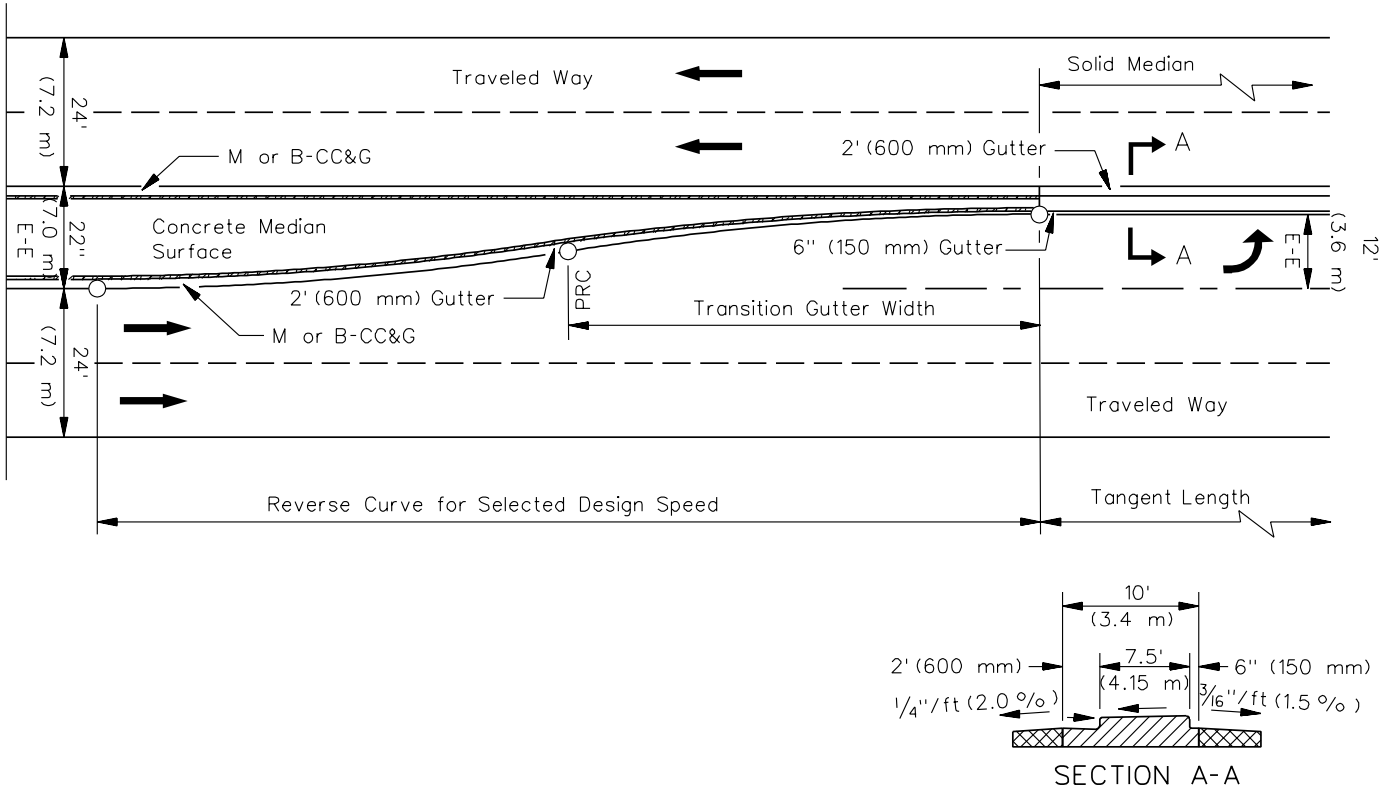

Notes:

1. *Ramp terminals with the crossroad usually will be signalized.*
2. *For the design speed of 50 mph (80 km/h), use an M-4.24 (M-10.60) curb and gutter on the median.*

TYPICAL CROSSROAD MEDIAN DETAIL
(Diamond Interchange)

Figure 37-5J

37-5.02(c) Four-Quadrant Partial Cloverleaf Interchange

The controlled ramp terminals of a four-quadrant partial cloverleaf interchange are similar in design to the ramp/crossroad intersections of a diamond interchange; however, they must be located to minimize any adverse operational effects on the directional ramps in the opposite quadrants. The left-turning path from the controlled ramp terminal of the four-quadrant partial cloverleaf Type A must intersect the crossroad downstream from the gore of the exit terminal, as illustrated in Figure 37-5K. The minimum distance of 200 ft (60 m) discourages wrong-way movements and allows for stored vehicles on the crossroad when signalized.

For the four-quadrant partial cloverleaf Type B, illustrated in Figure 37-5L, terminate the left-turn lane from the crossroad into the controlled entrance ramp in advance of the merging nose of the entrance terminal. Providing this separation minimizes confusion between two decision points on the crossroad and provides better traffic operations when signalized.

37-5.02(d) Compressed Diamond with Slip Ramps

The designer must consider the impact of frontage roads, where present, on interchange design. At some urban interchanges, separating the intersection of the ramp and frontage road with the crossroad may be impractical. In these cases, the only alternative is to provide a slip ramp to a one-way frontage road before the intersection with the crossroad. This can apply to either an exit or entrance ramp. Sufficient distance must then be provided between the freeway ramp terminal and the ramp/frontage road terminal to provide the necessary acceleration or deceleration distance and weaving distance.

Figure 37-5M provides the basic schematic for this design. The critical design element is the distance “A” between the ramp/frontage road merge and the crossroad. This distance must be sufficient to allow traffic weaving, vehicular deceleration and stopping, and vehicular storage to avoid interference with the merge point. Figure 37-5M presents general guidelines that may be used to estimate this distance during the preliminary design phase. A number of assumptions have been made including weaving volume, operating speeds, and intersection queue distance. Therefore, a detailed analysis will be necessary to firmly establish the needed distance to properly accommodate vehicular operations. Additional information can be found in a Transportation Research Record 682 report entitled, “Distance Requirements for Frontage-Road Ramps to Cross Streets: Urban Freeway Design” or in the Texas Transportation Institute publication *Procedures to Determine Frontage Road Level of Service and Ramp Spacing*.

Distance “B” in Figure 37-5M is determined on a case-by-case basis. It should be determined based on the number of frontage road lanes and the intersection design. This distance is typically determined by the necessary weave distance from the intersection to the ramp entrance. For capacity analysis of the weave section, see the *Highway Capacity Manual*.

Notes:

1. Intersection designed for a WB-65 design vehicle.
2. Ramp noses of channelizing islands as shown.
3. The angle of ramp/crossroad intersection should be approximately 90°.
4. Use 2' wide gutters on median islands.
5. Traffic signals may be required at the intersection.
6. Use lighting to minimize wrong-way movements.

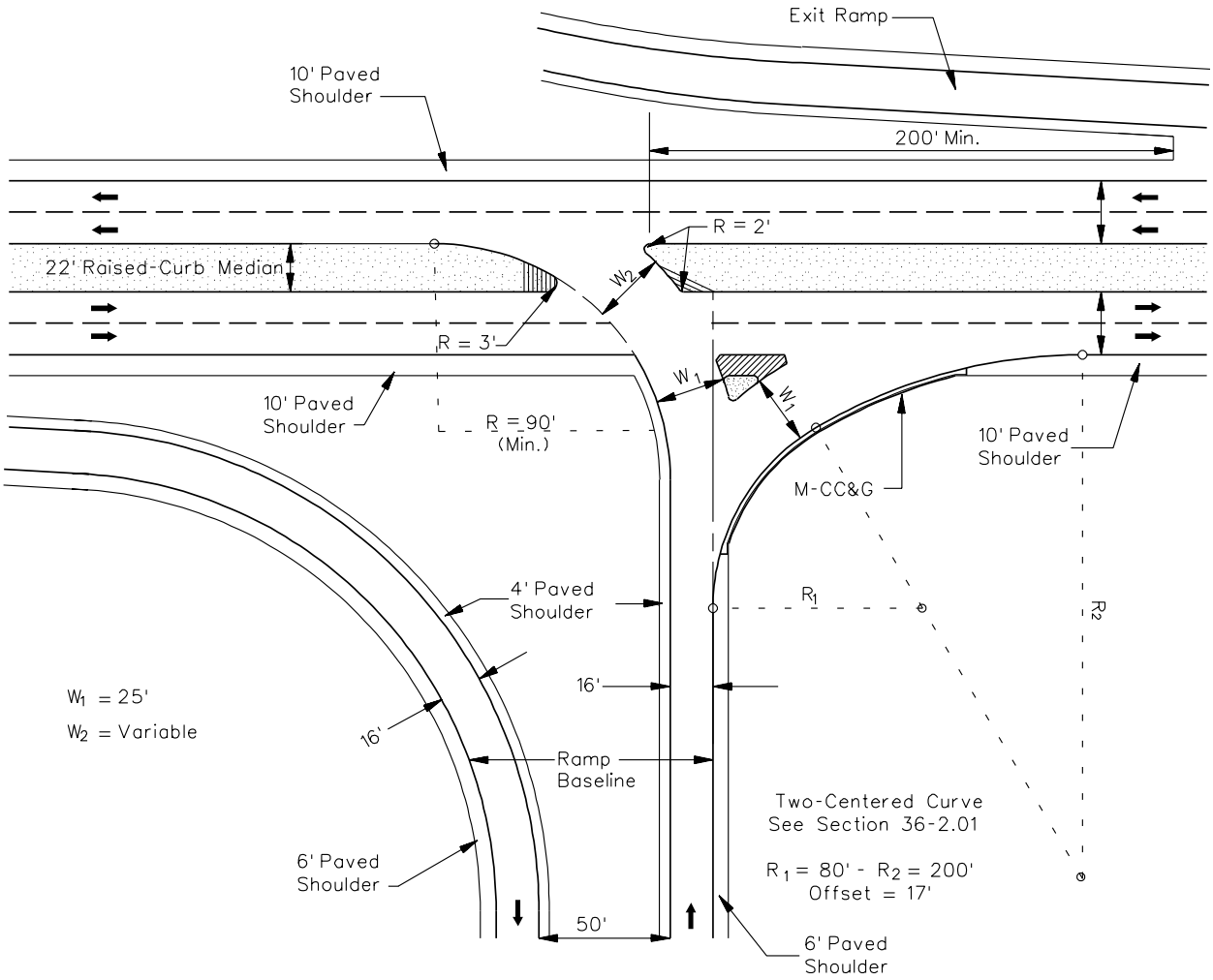

CONTROLLED TERMINAL — PARCLO INTERCHANGE
(Four-Quad - Type A)
(US Customary)

Figure 37-5K

Notes:

1. Intersection designed for a WB-20 design vehicle.
2. Ramp noses of channelizing islands as shown.
3. The angle of ramp/crossroad intersection should be approximately 90°.
4. Use 600 mm wide gutters on median islands.
5. Traffic signals may be required at the intersection.
6. Use lighting to minimize wrong-way movements.

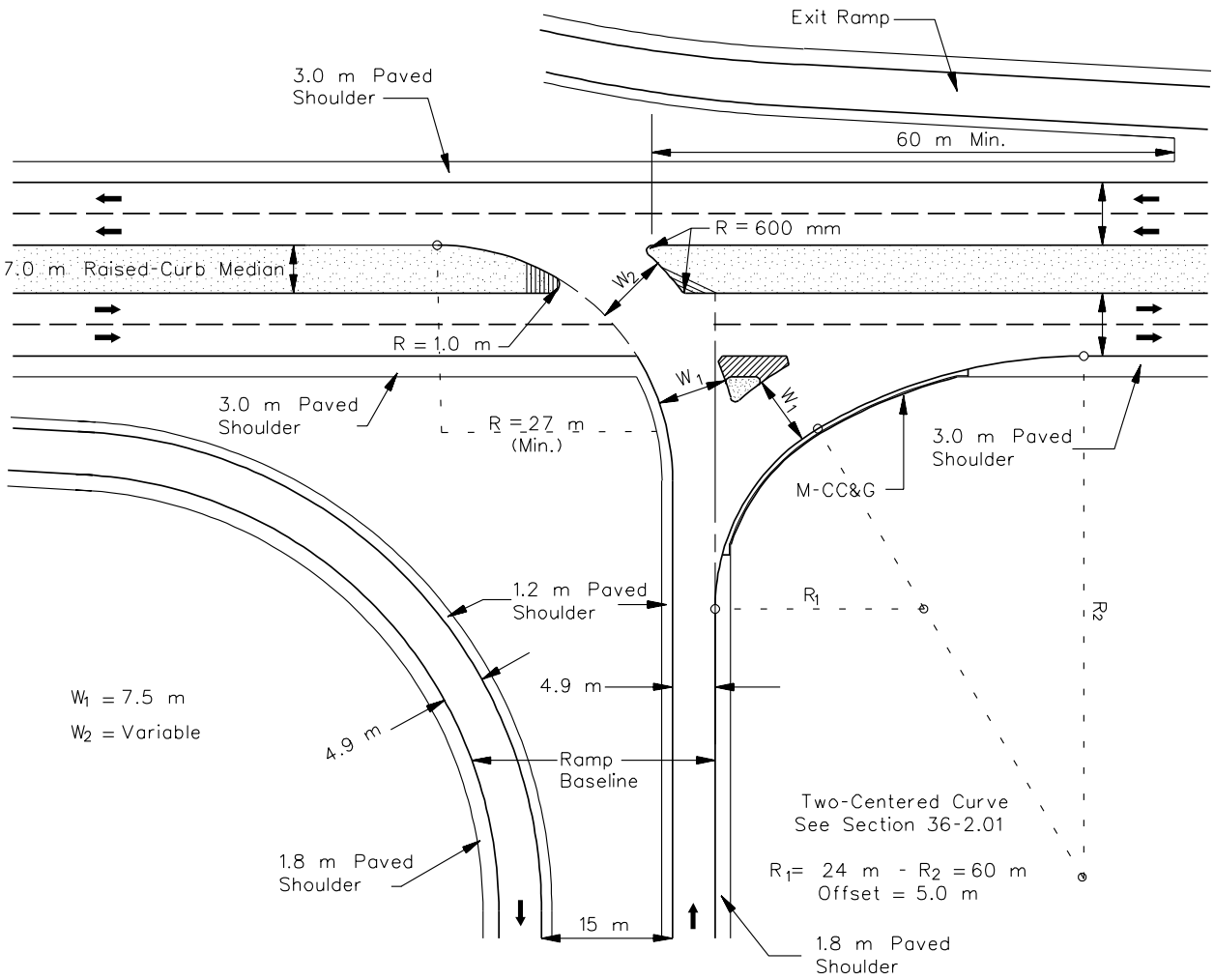

CONTROLLED TERMINAL — PARCLO INTERCHANGE
(Four-Quad - Type A)
(Metric)

Figure 37-5K

Notes:
1. Intersection designed for a WB-65 design vehicle.
2. Ramp noses of channelizing islands as shown.
3. Provide full depth (Min. 10") paved shoulders.
4. The angle of ramp/crossroad intersection
5. should be approximately 90°.
6. Use 600 mm wide gutters on median islands; see Figure 37-5J.
7. Traffic signals may be required at the intersection.
8. Use lighting to minimize wrong-way movements.
9. See Section B-B on Standard Entrance Terminal.

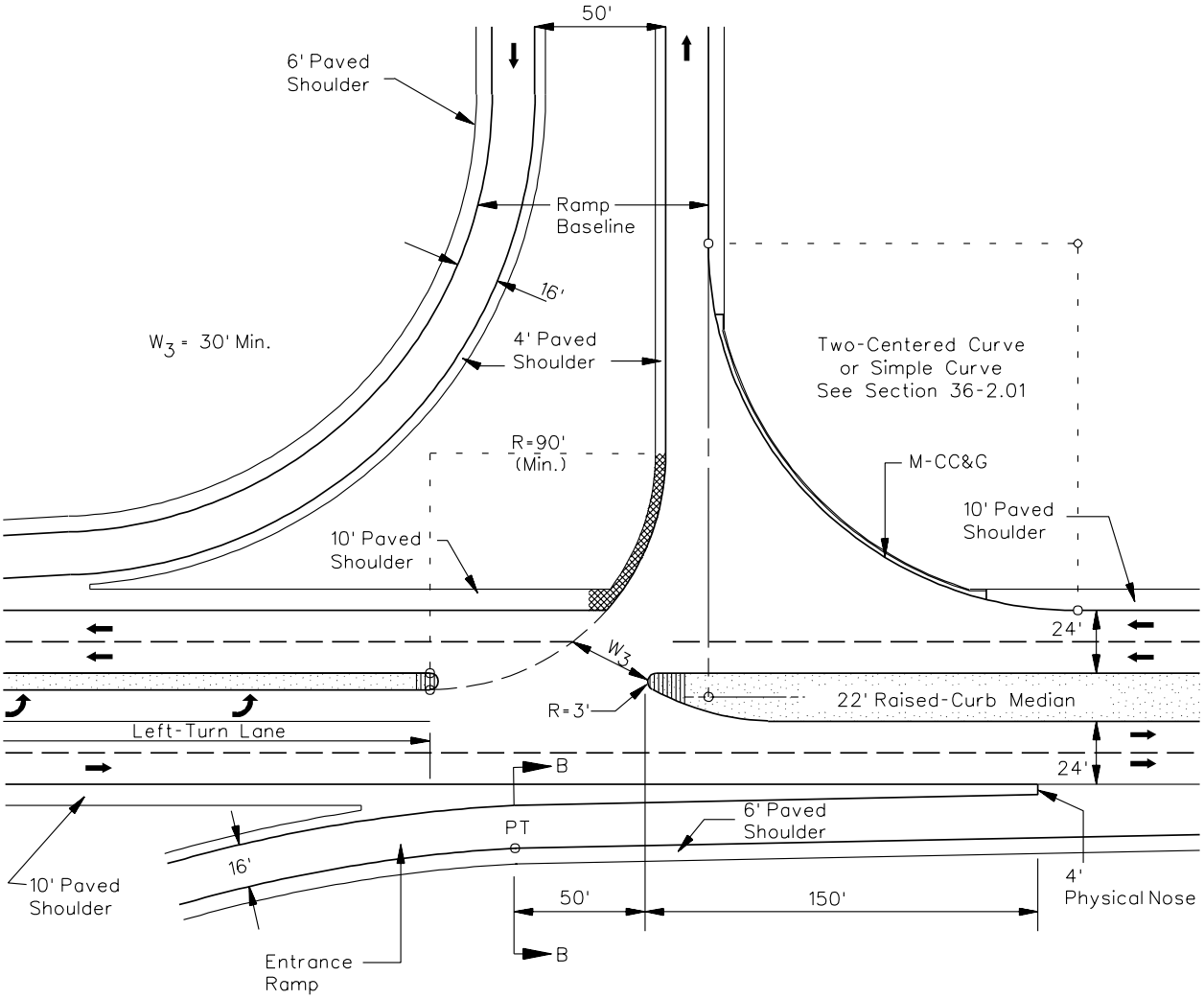

CONTROLLED TERMINAL — PARCLO INTERCHANGE
(Four-Quad - Type B)
(US Customary)

Figure 37-5L

Notes:
1. Intersection designed for a WB-20 design vehicle.
2. Ramp noses of channelizing islands as shown.
3. Provide full depth (Min. 250 mm) paved shoulders.
4. The angle of ramp/crossroad intersection
5. should be approximately 90°.
6. Use 600 mm wide gutters on median islands; see Figure 37-5J.
7. Traffic signals may be required at the intersection.
8. Use lighting to minimize wrong-way movements.
9. See Section B-B on Standard Entrance Terminal.

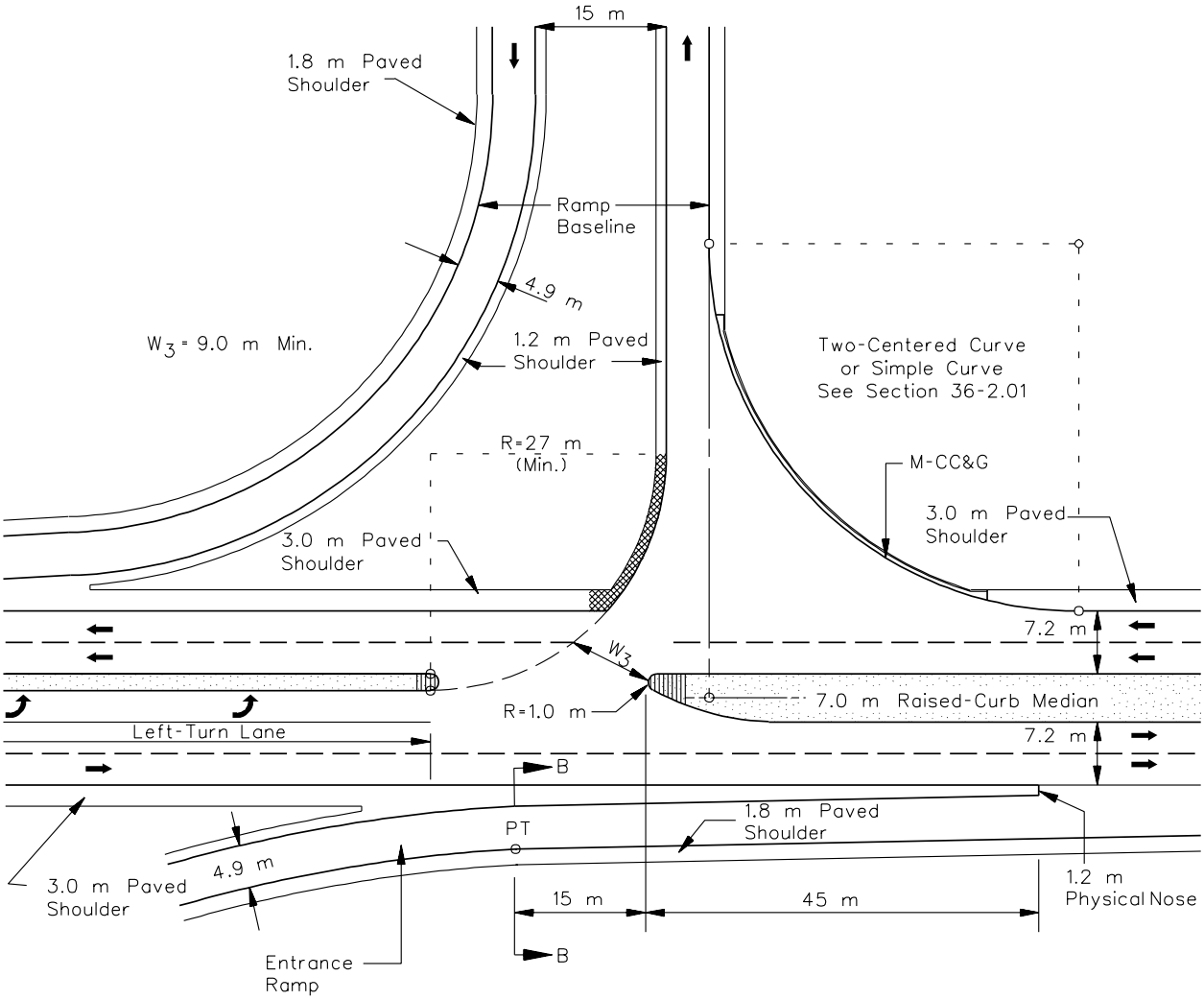

CONTROLLED TERMINAL — PARCLO INTERCHANGE
(Four-Quad - Type B)
(Metric)

Figure 37-5L

Frontage Road Volume at Intersection (vph)①	Exit Ramp Volume (vph)②	"A"		
		Typical Minimum	Typical Desirable	Special Considerations
200	140	380 ft (115 m)	500 ft (150 m)	270 ft (80 m)
400	280	465 ft (140 m)	565 ft (170 m)	370 ft (110 m)
600	420	500 ft (150 m)	635 ft (190 m)	400 ft (120 m)
800	560	550 ft (165 m)	700 ft (210 m)	435 ft (130 m)
1000	700	600 ft (180 m)	765 ft (230 m)	465 ft (140 m)
1200	840	650 ft (195 m)	885 ft (265 m)	485 ft (145 m)
1400	980	700 ft (210 m)	985 ft (295 m)	500 ft (150 m)
1600	1120	785 ft (235 m)	1085 ft (325 m)	535 ft (160 m)
1800	1260	865 ft (260 m)	1200 ft (360 m)	565 ft (170 m)
2000	1400	985 ft (295 m)	1315 ft (395 m)	600 ft (180 m)

① *Assumes the total volume of traffic on the frontage road including the merged exit-ramp volume.*
② *Assumed to be 70% of total volume in first column.*

Notes:

1. *Table values are acceptable for planning purposes only. Final dimensions will be based on a detailed operational analysis. This design may be used only in restricted urban areas.*
2. *Distance "B" is determined on a case-by-case basis.*
3. *"C" is a slip ramp.*
4. *See Chapter 35 for access control design along frontage road and crossroad.*

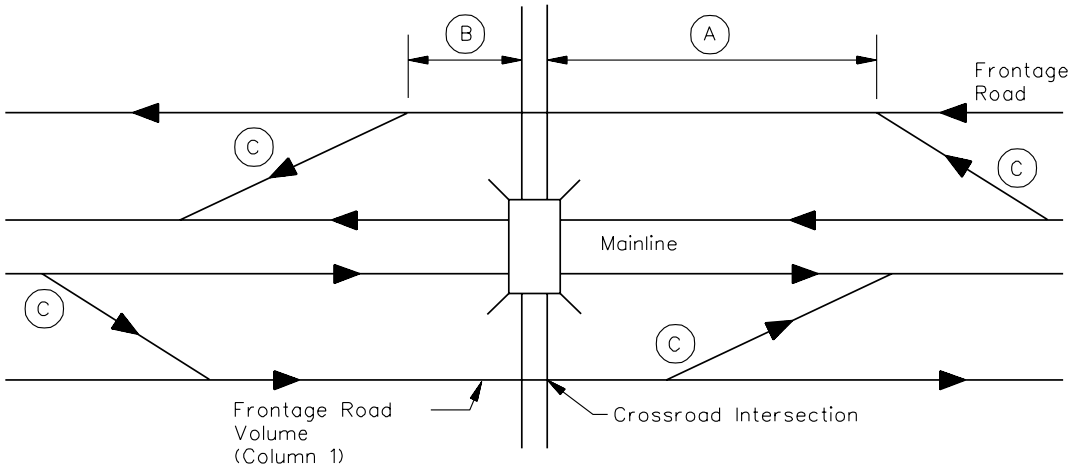

RAMP/CONTINUOUS FRONTAGE ROAD INTERSECTION

Figure 37-5M

37-5.03 Crossroad Access Control

Providing access control along the crossroad of an interchange is an important design feature for both the safety and efficient operation of an interchange. The access control line is defined as a line established by the Department that restricts direct access to property abutting a highway. See Chapter 35 for additional details on access control limits.

37-6 FREEWAY RAMP TERMINALS

37-6.01 Exit Ramp Terminals

37-6.01(a) Types

The exit ramp terminal is a speed-change lane that permits high-speed traffic to exit from the through lane of the highway and enter the ramp proper. The exit terminal must be visible to the approaching motorist and provide a clear indication for the point of departure from the traveled way. When designing the interchange, consider the following exit ramp types:

1. Standard Exit Terminal. There are two basic types of exit freeway ramp terminals — the parallel design and the taper design. For all new and reconstructed ramps, use the taper design. Figure 37-6A and the *Illinois Highway Standards* illustrate the Department's standard exit ramp terminal design. Exit ramp terminals may carry a marked route provided the marked route is not a freeway or expressway. Where a freeway or expressway turns through an interchange, use the major divergence design as discussed in Section 37-6.03.

2. Exit Terminal With an Auxiliary Lane. An auxiliary lane may be required prior to the exit terminal:

   - to meet the guidelines discussed in Section 37-2.05,
   - where the exiting design traffic exceeds the appropriate service volume of a standard exit terminal design but does not require a two-lane exit, and/or
   - proceeding a left-hand exit terminal. Note that interchange designs should not use left-hand exit terminals. However, where necessary, left-hand exits must be approved by BDE with the interchange type approval.

   Figure 37-6B illustrates the design criteria for an exit terminal preceded by an auxiliary lane. Extend the pavement markings on the left edge of the ramp to the right edge of the mainline traveled way. Provide transverse pavement markings in the recovery area to discourage the use of the auxiliary lane beyond the exit gore. Pavement markings in the recovery area should be according to the Bureau of Operations' *Policies and Procedures Manual*.

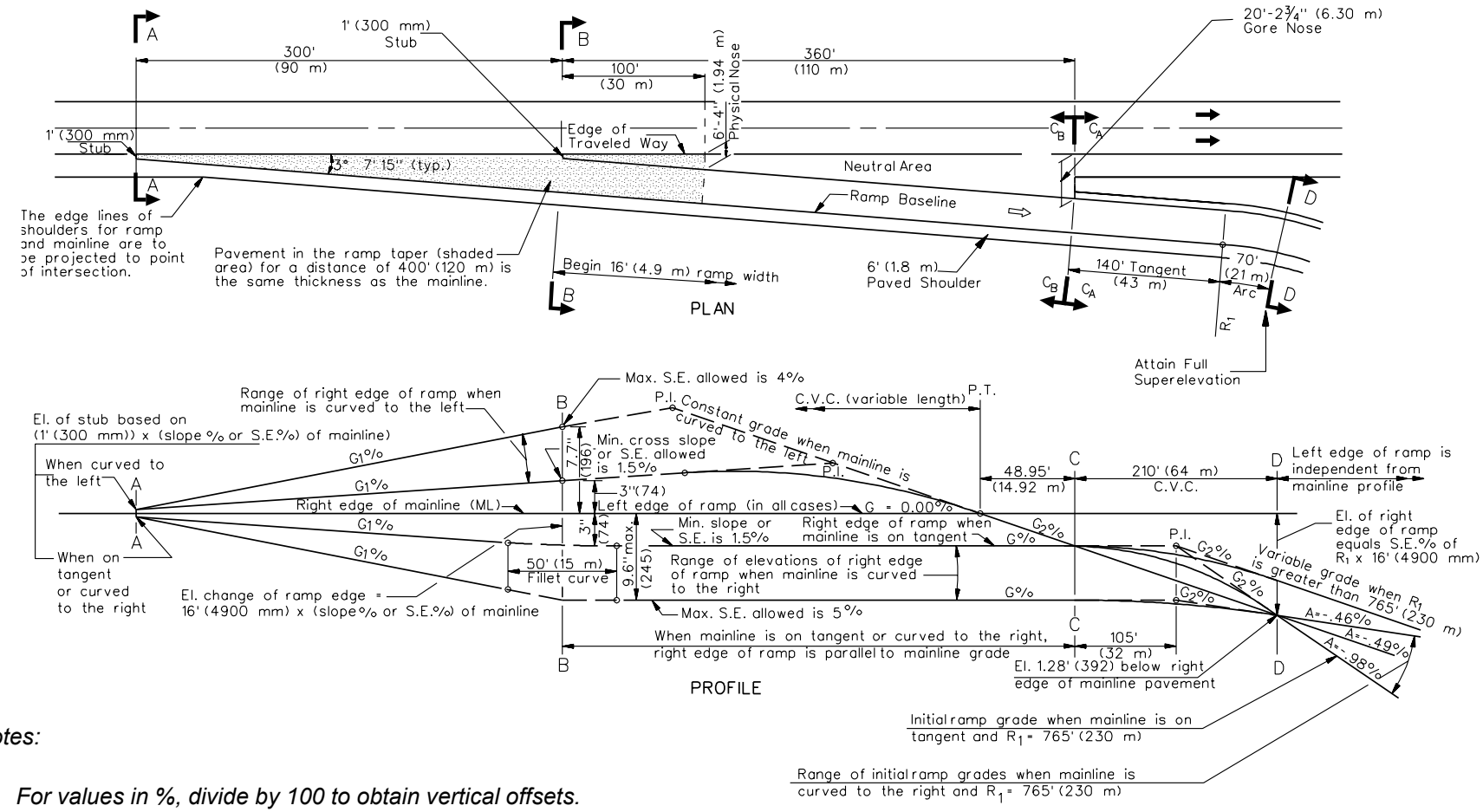

Notes:

1. *For values in %, divide by 100 to obtain vertical offsets. Vertical differences are in inches (mm).*
2. *C_A = Cross section ahead*
3. *C_B = Cross section back*
4. *Mainline grade is assumed to be 0%.*
5. *See Highway Standards for Sections B-B and C-C.*

STANDARD EXIT RAMP TERMINAL

Figure 37-6A

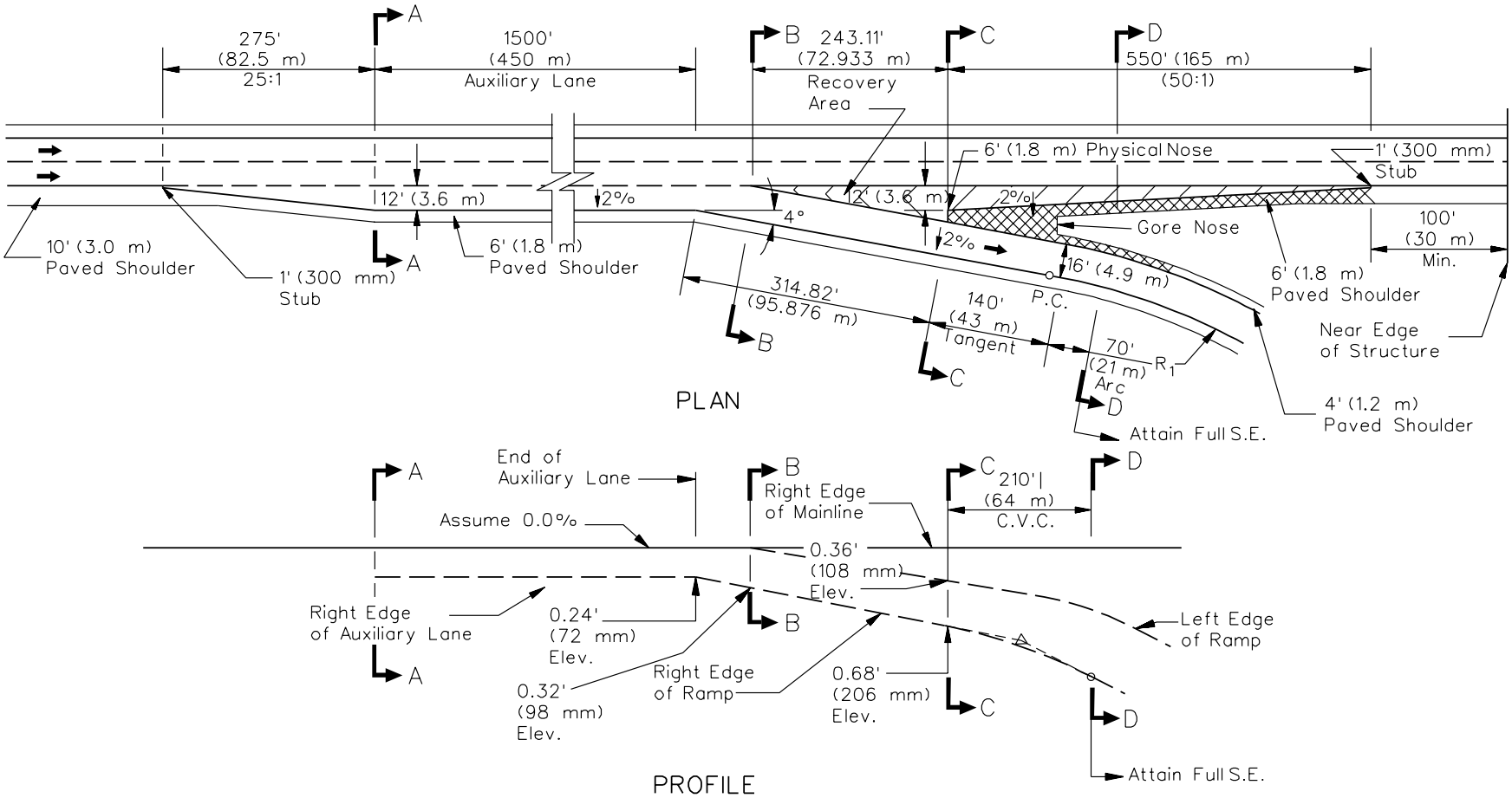

Notes:

1. *Where the mainline is superelevated to the left or right, the terminal elevations and grades must be adjusted.*
2. *A 50 ft (15 m) vertical curve may be used for comfort and aesthetics along the right edge of the ramp at the grade changes.*
3. *Develop cross sections A-A, B-B, C-C, and D-D during the preparation of the IDS.*
4. *Regardless of the % S.E. of E-E, the % cross slope at D-D is always 2/3 the difference* between C-C and E-E.

EXIT RAMP TERMINAL WITH AUXILIARY LANE

Figure 37-6B

3. Two-Lane Exits. These terminals are typically required where the traffic volumes on the ramp exceed the capacity of a single-lane exit ramp. The following lists several elements the designer should consider for two-lane exit terminals:

   a. Lane Balance. For consistent freeway operations, maintain lane balance at the freeway ramp terminal; see Section 37-2.03.

   b. Design. A typical two-lane exit terminal design is illustrated in Figure 37-6C. To develop the proper level of service at a two-lane exit facility and provide proper lane balance, add a minimum 1500 ft (450 m) long auxiliary lane prior to the exit terminal. The concepts for controlling gradelines and pavement cross slopes on two-lane exit terminals are generally the same as those described for major divergences. Prepare detailed cross sections for critical locations on the two-lane exit ramp and present them in the Interchange Design Study (IDS).

37-6.01(b) Sight Distance

The sight distance approaching the gore nose should exceed the stopping sight distance for the through traffic, desirably by 25% or more. Where there are unusual conditions, consider providing decision sight distance to the exit terminal. Extra sight distance is particularly important for exit loops immediately beyond a structure. When measuring for adequate sight distance, ensure that the motorist can see the pavement surface at and beyond the gore nose. Locating the exit terminal and gore nose where the mainline is on an upgrade provides the best design condition. Do not locate exit terminals near mainline crest vertical curves where the ramp pavement may disappear from the driver's view.

37-6.01(c) Alignment

Figures 37-6D through 37-6F illustrate examples of plan and profile views for typical exit ramp terminals where the mainline is on tangent, curving to the right, and curving to the left. The Department's preferred practice is to locate exit terminals on tangent sections or on mainline curves to the right. However, this may not be practical in highly restricted areas. Section 37-4.07 discusses the minimum alignment criteria for the ramp proper, including the minimum radii for the initial ramp curve (R_1).

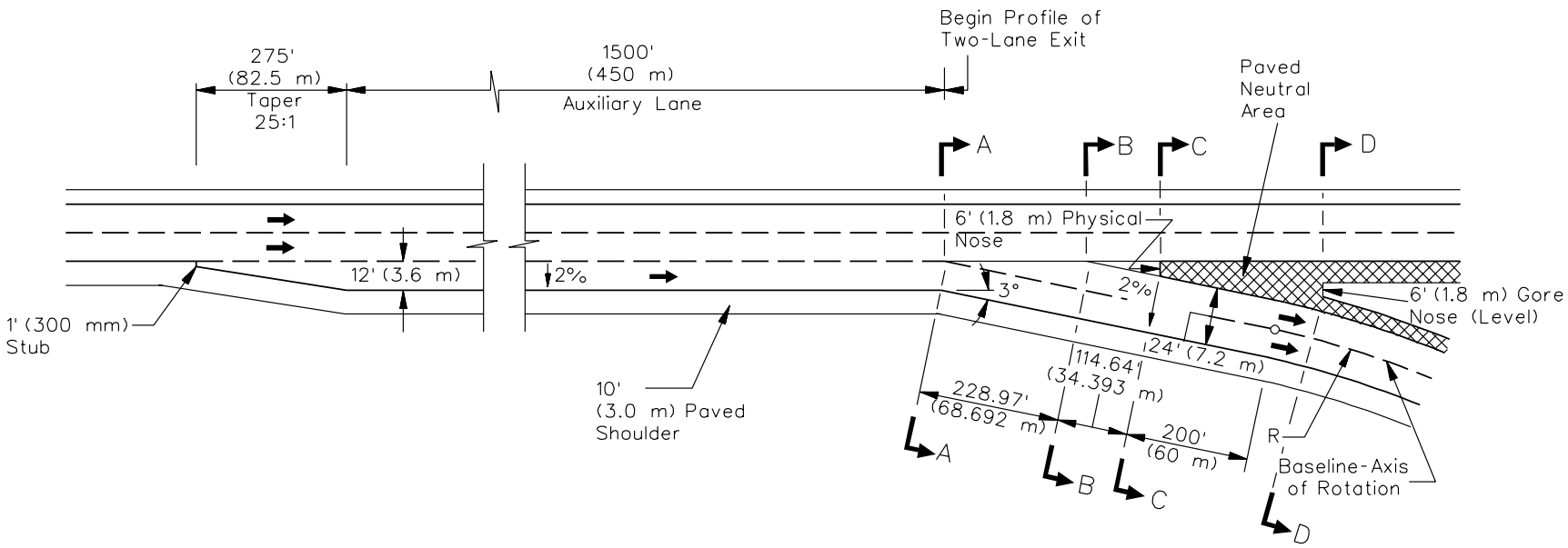

Notes:

1. *Attain full superelevation at Section D-D.*
2. *Develop cross sections A-A, B-B, C-C, and D-D during the preparation of the IDS.*

TWO-LANE EXIT RAMP TERMINAL

Figure 37-6C

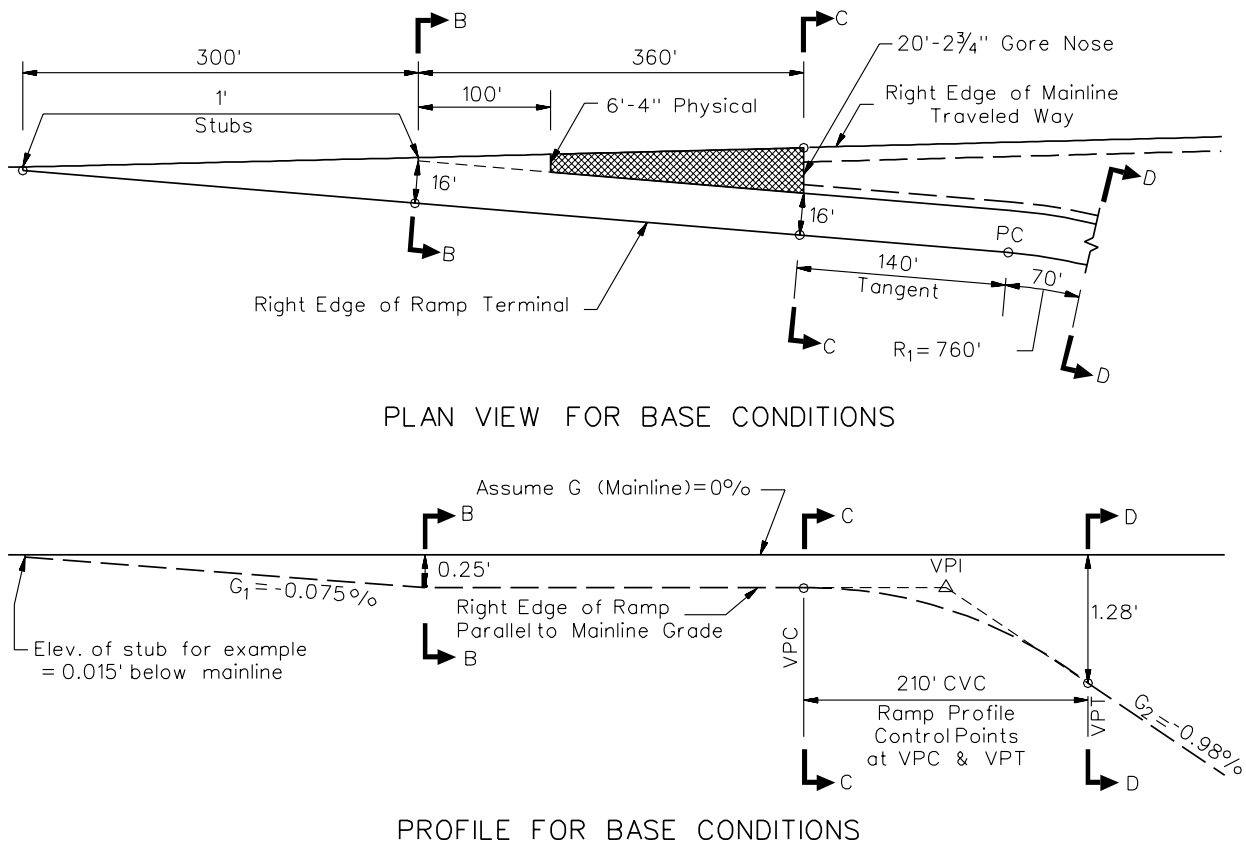

Profile equations for base conditions with R_1 = 760 ft:

$G_1 = G - 0.075\%$
$G_2 = G - 0.98\%$

APPLICATION: See Figure 37-6A.

<u>Example 37-6.1</u>

<u>Given</u>: Freeway Design Speed = 70 mph
Freeway Grade, G = + 2.00%
Initial Ramp Radius, R_1 = 765 ft

<u>Problem</u>: Find G_1 and G_2, where G_1 and G_2 are the actual design grades.

<u>Solution</u>: Using profile equations above:

$G_1 = G - 0.075\%$ $\qquad$ $G_2 = G - 0.98\%$
$G_1 = +2.00\% - 0.075\% = +1.925\%$ $\qquad$ $G_2 = +2.00\% - 0.98\% = +1.02\%$

EXAMPLE EXIT RAMP TERMINAL
(Mainline on Tangent)

Figure 37-6D

Example 37-6.2

Given: Freeway Design Speed = 70 mph
Ramp Design Speed = 50 mph
Freeway Grade, G = +2.00%
Initial Ramp Radius, R_1 = 2000 ft
Ramp e_{max} = 8%

Problem: Find G_1 and G_2.

Solution:

1. From Figure 32-3B, ramp superelevation: e = 5.1%

2. Calculate vertical offset at right edge of ramp at Section D-D:

   Offset = 5.1/100 x 16 ft = 0.82 ft

3. Elevation of VPI = –0.25 ft and elevation at right edge of ramp = –0.82 ft, calculate G_2:

$$G_2 = \left[\frac{(0.82 - 0.25)}{105}\right] \text{ x } 100 = 0.57/105 \text{ x } 100 = -0.54\%$$

   Where: 105 ft = 1/2 CVC Length

4. Determine actual G_1 and G_2:

G_1 = G – 0.075%	G_2 = G – 0.54%
G_1 = +2.00% – 0.075%	G_2 = +2.00% – 0.54%
G_1 = +1.925%	G_2 = + 1.46%

EXAMPLE EXIT RAMP TERMINAL
(Mainline on Tangent)

Figure 37-6D
(Continued)

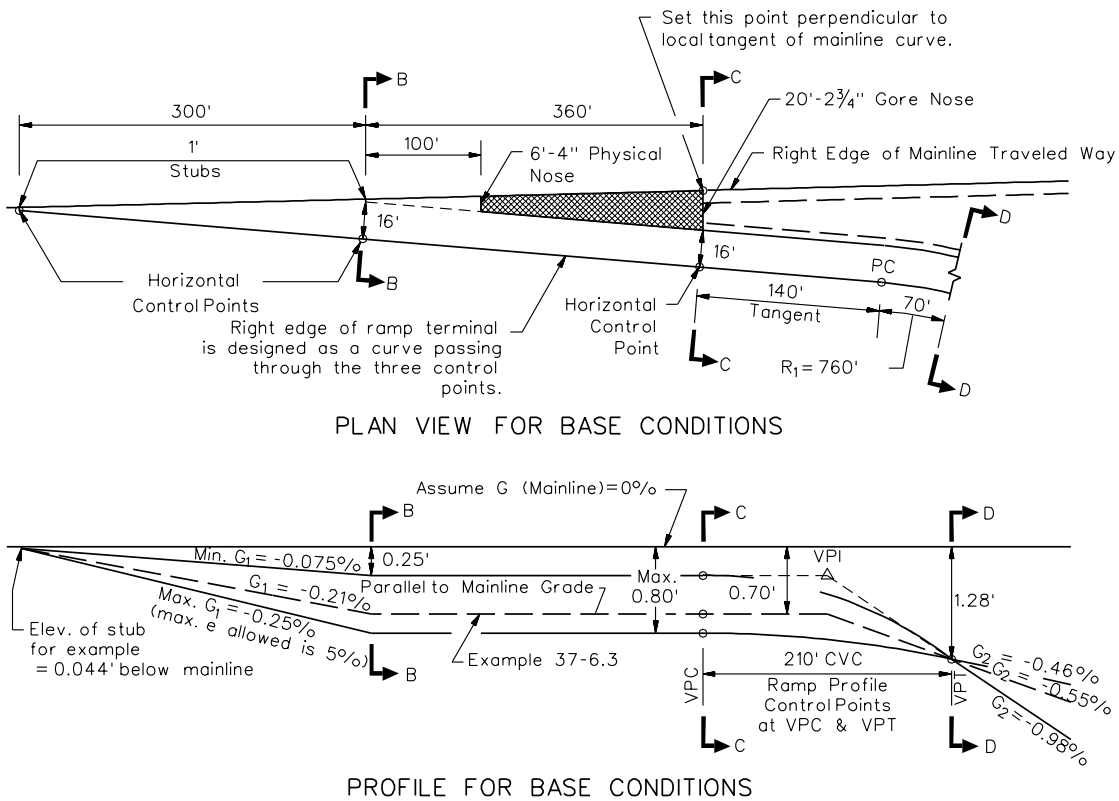

Profile equations for R_1 = 760 ft:

$$G_1 = G - \left[\frac{(e/100 \text{ x } 16 - e/100 \text{ x } 1.0)}{300 \text{ ft}}\right] \text{x } 100$$

$$G_2 = G - \left[\frac{(1.28 - \text{Elev. VPI})}{105 \text{ ft}}\right] \text{x } 100$$

Where: e = superelevation rate of mainline curve.
105 ft = 1/2 CVC Length

APPLICATION: See Figure 37-6A.

Example 37-6.3

Given: Freeway Design Speed = 70 mph
Freeway curves to the right, R = 4000 ft
Initial Ramp Radius, R_1 = 765 ft
Freeway Grade, G = – 1.80%
Freeway e_{max} = 6%

EXAMPLE EXIT RAMP TERMINAL
(Mainline Curving to the Right)

Figure 37-6E

Problem: Find G_1 and G_2, where G_1 and G_2 are the actual design grades.

Solution:

1. From Figure 32-3C, freeway superelevation, e = 4.4%.

2. Using the profile equations above:

$$G_1 = -1.80\% - \left[\frac{(4.4/100 \times 16 - 4.4/100 \times 1.0)}{300 \text{ ft}}\right] \times 100$$

$G_1 = -2.02\%$

$$G_2 = -1.80\% - \left[\frac{(1.28 - 0.70)}{105 \text{ ft}}\right] \times 100$$

$G_2 = -2.35\%$

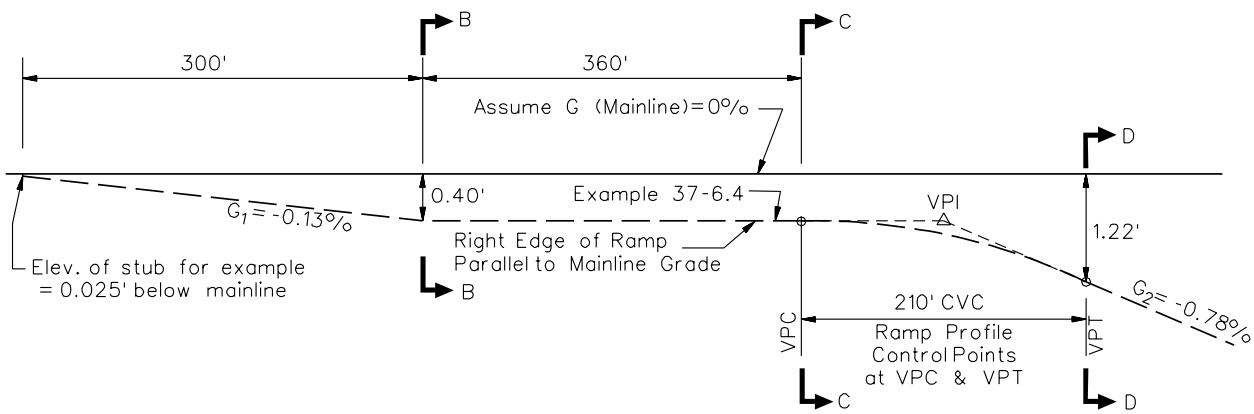

PROFILE FOR BASE CONDITIONS (R_1 > 760 ft)

Example 37-6.4

Given: Freeway Design Speed = 70 mph
Freeway curves to the right, R = 8000 ft
Initial Ramp Radius, R_1 = 1000 ft
Freeway grade, G = +2.50%
Freeway e_{max} = 6%
Ramp e_{max} = 8%

Problem: Find G_1 and G_2.

EXAMPLE EXIT RAMP TERMINAL
(Mainline Curving to the Right)

Figure 37-6E
(Continued)

Solution:

1. From Figure 32-3C, freeway superelevation: e = 2.5%. With flat curvature, check superelevation rate to ensure proper drainage across the 24-ft traveled way. Minimum rate is 2.0%; therefore, the design rate of 2.5% is acceptable.

2. From 32-3B, ramp superelevation: e = 7.6%.

3. Calculate the vertical offset of the right edge of ramp at Section D-D::

   Offset = 7.6/100 x 16 ft = 1.22 ft

4. The elevation of the VPI = –0.40 ft for the base condition of 2.5% superelevation and the elevation at the right edge of ramp at Section D-D = –1.22 ft. Calculate G_2 for this example:

$$G_2 = \left[\frac{(1.22 - 0.40)}{105 \text{ ft}}\right] \times 100$$

$$G_2 = -0.78\%$$

5. Determine the actual G_1 and G_2.

G_1 = G – 0.13%
G_1 = +2.50% – 0.13%
G_1 = +2.37%

G_2 = G – 0.78%
G_2 = +2.50% – 0.78%
G_2 = + 1.72%

EXAMPLE EXIT RAMP TERMINAL
(Mainline Curving to the Right)

Figure 37-6E
(Continued)

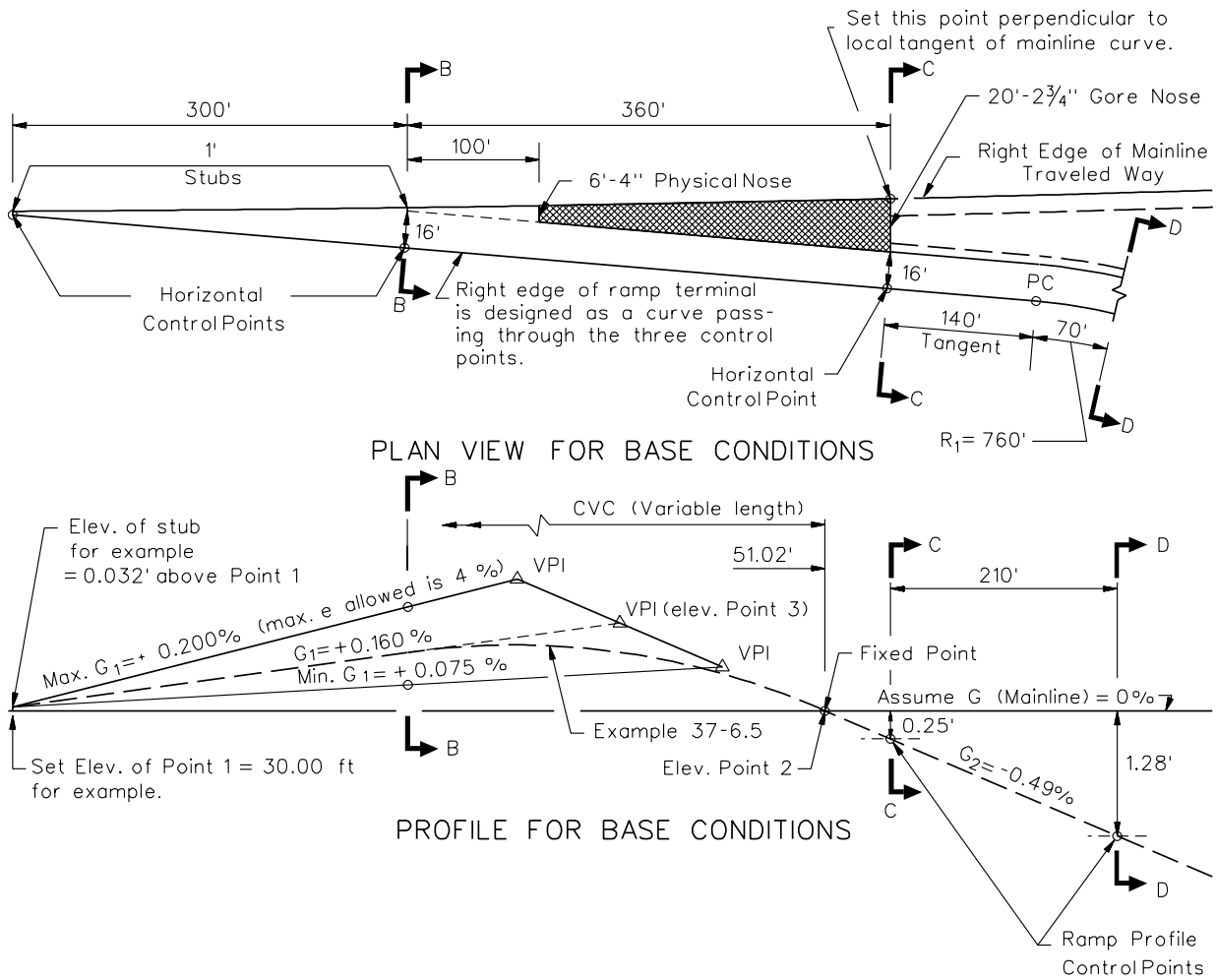

Profile equations for actual design with R_1 = 760 ft:

$$G_1 = G + \left[\frac{(e/100 \times 16 - e/100 \times 1.0)}{300}\right] \times 100$$

$$G_2 = G - 0.49\%$$

Where: e = superelevation rate of mainline curve

APPLICATION: See Figure 37-6A.

Example 37-6.5

Given: Freeway Design Speed = 70 mph
Freeway curves to the left, R = 6000 ft
Initial Ramp Radius, R_1 = 760 ft (curved to the right)
Freeway Grade, G = + 2.00%
Freeway e_{max} = 6%

Problem: Find G_1 and G_2.

EXAMPLE EXIT RAMP TERMINAL
(Mainline Curving to the Left)

Figure 37-6F

Solution:

1. From Figure 32-3C, freeway superelevation: e = 3.2%.

2. Use profile equations above:

$$G_1 = +2.00\% + \left[\frac{(3.2/100 \text{ x } 16 - 3.2/100 \text{ x } 1.0)}{300 \text{ ft}}\right] \text{ x } 100$$

G_1 = + 2.160%

G_2 = G – 0.49%

G_2 = +2.00% – 0.49% = + 1.51%

3. Find the location and elevation of VPI where the two design grades intersect:

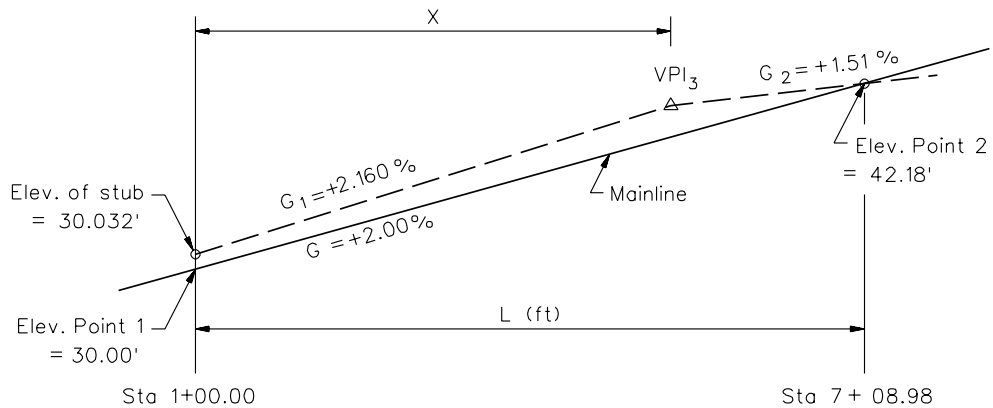

See Chapter 33 for basic equation of two lines intersecting:

$$x = \frac{(\text{Elev. Pt. 2} - \text{Elev. Stub}) - G_2/100 \text{ x } L}{(G_1 - G_2)/100}$$

$$x = \frac{(42.18 - 30.032) - 1.51/100 \text{ x } 608.98}{(2.160 - 1.510)/100}$$

x = 452.13 ft

Elev. VPI_3 = G_1X + Elev. Stub

$$\text{Elev. } VPI_3 = \frac{2.160\%}{100} (452.13 \text{ ft}) + 30.032$$

Elev. VPI_3 = 39.80 ft

EXAMPLE EXIT RAMP TERMINAL
(Mainline Curving to the Left)

Figure 37-6F
(Continued)

Example 37-6.6

For a freeway with 70 mph design speed and a mainline curve to the left, there may be certain situations where the typical profile design shown in Example 37-6.5 does not provide the best fit for an exit terminal. In these cases, extend the 140 ft tangent section of the standard exit terminal ahead on tangent before an initial ramp curve to the right is designed into the ramp alignment. The cross slope of the ramp at Section C-C and beyond should be set at 3/16″/ft. Near the end of the tangent section, the ramp is then rotated to transition into the superelevation runoff length.

EXAMPLE EXIT RAMP TERMINAL
(Mainline Curving to the Left)

Figure 37-6F
(Continued)

37-6.01(d) Superelevation and Cross Slopes

Ramp cross slopes and superelevation rates for horizontal curves on ramps near the freeway ramp terminal must be developed to properly transition the driver from the mainline to the first curve on the exit ramp. The following will apply:

1. Cross Slope. The cross slope of the initial segment of the ramp departure from the through lane, or an auxiliary lane preceding the exit ramp is usually sloped at the same rate as the mainline. However, if the mainline has a flat longitudinal grade (i.e., less than 0.35%), consider increasing the cross slope rate on an auxiliary lane and the exit terminal to 2%. Where the mainline is curving to the right, the maximum cross slope on the exit terminal is 5%. Where the mainline is curving to the left, the maximum cross slope on the terminal is 4%.

2. Maximum Ramp Superelevation. In general, use an e_{max} of 8%. However, in highly congested areas with snow and ice conditions, use an e_{max} of 6%.

3. Radius/Superelevation Rate. Section 32-3 discusses the use of Method 5 for open roadway conditions to distribute superelevation and side friction. This theoretical basis also applies to the ramp portion of freeway exit terminals. Therefore, Figure 32-3B (e_{max} = 8%) and Figure 32-3C (e_{max} = 6%) are used to determine the proper radius and superelevation rate for horizontal curves on exit ramps. Also, see Figure 37-4F. To determine the applicable design speed to use, see Figure 37-6G.

US Customary		Metric	
Mainline Design Speed (mph)	Minimum Design Speed (mph)of Initial Curve (R_1)	Mainline Design Speed (km/h)	Minimum Design Speed (km/h)of Initial Curve (R_1)
70	50	110	80
60	45	100	70
50	40	80	60
40*	30	60*	50

**C-D roads only*

MINIMUM DESIGN SPEED FOR INITIAL EXIT CURVE

Figure 37-6G

37-6.01(e) Gore Area

The gore area is normally considered both the paved triangular area between the through lane and the exit ramp, plus the graded area which extends a significant distance downstream beyond the gore nose; see Figure 37-6H. The following definitions will apply:

1. Physical Nose. This is a point 100 ft (30 m) downstream of Section B-B from where the 16 ft (4.9 m) ramp width begins. As illustrated in Figure 37-6H, the physical nose has a dimensional width of 6 ft 4 in (1.94 m).

2. Gore Nose. This is the point where the paved shoulders separate from each other and the sodded area begins as the ramp and mainline diverge. As illustrated in Figure 37-6H, the gore nose has a dimensional width of 20 ft 2¾ in (6.3 m) which includes the 10 ft (3.0 m) right shoulder of the freeway and the 4 ft (1.2 m) paved left shoulder of the ramp.

Consider the following when designing the gore area:

1. Roadside Obstacles. Desirably, the area beyond the gore nose should be free of all obstacles (except the ramp exit sign) for at least 100 ft (30 m) or more beyond the gore nose. Any obstacles within approximately 350 ft (100 m) of the gore nose should be made breakaway or shielded by a barrier. See Chapter 38 for additional guidance for the treatment of roadside obstacles.

2. Curbing. Do not use curbing within the gore area of an exit terminal.

3. Side Slopes. Side slopes and ditches adjacent to the gore area should meet the same criteria as the mainline. The graded area beyond the gore nose should be as flat as practical, but still drain properly. The exit terminal should be located so there are no major elevation differences in this area. For some reconstruction projects, the vertical divergence of the ramp and mainline profiles may warrant protection for both roadways beyond the gore nose (e.g., guardrail and/or impact attenuators).

4. Cross Slopes. The paved triangular gore area between the through lanes and exit ramp should be flat and traversable. The cross slopes in the gore area from the physical nose to the gore nose are 3/16″/ft (1.5%). This design provides a drainage swale in the neutral area of the terminal and is shown in Figure 37-6H.

5. Traffic Control Devices. Signing in advance of the exit and at the divergence should be according to the *ILMUTCD* and Bureau of Operations' *Policies and Procedures Manual*.

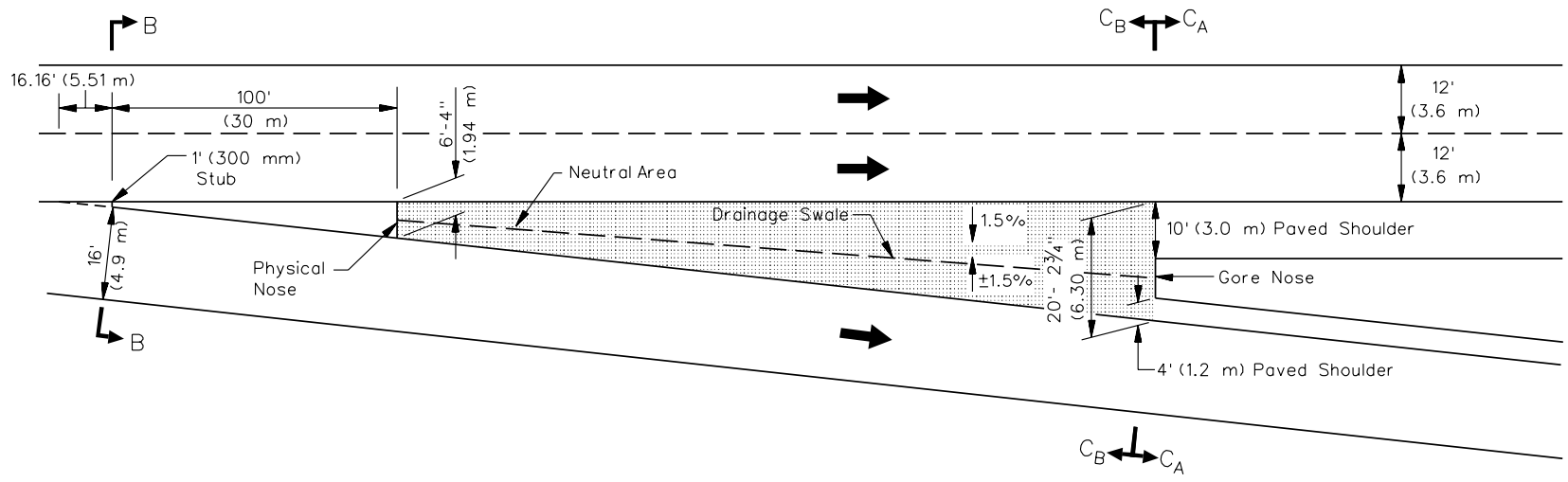

Note: Add drainage inlet in neutral area where required.

EXIT RAMP GORE AREA

Figure 37-6H

37-6.01(f) Structures

Exit ramp terminals on or near structures can create a split-bridge design which, because of safety, economic, and maintenance considerations, should be avoided. A split-bridge deck design may be required where the distance from the right edge of the mainline traveled way to the left edge of the ramp exceeds 36 ft (11 m). This results in a fixed object on the structure that must be shielded by an impact attenuator. The following, in order of preference, presents options for addressing this problem:

1. Physical Nose Beyond Structure. Figure 37-6I(a) illustrates the desirable position of the exit ramp terminal on a structure. This position allows an appropriate perception and reaction distance between the structure and ramp gore nose. It also permits the placement of the 30 ft (9 m) bridge approach pavement to be coordinated with the preferred terminal construction.

2. Gore Nose on Structure. Figure 37-6I(b) illustrates a single structure design with the exit ramp terminal positioned so that the distance between the mainline and ramp does not exceed 36 ft (11 m). Preferably, the structure should be placed upstream of the 36 ft (11 m) maximum offset.

3. Gore Nose on Split Structure. Figure 37-6I(c) illustrates a split-bridge design which cannot be avoided due to the length and location of a structure. The designer must provide an impact attenuator for this special situation. For information on the required minimum impact attenuator area, see Section 38-8.

Figure 37-6J illustrates the minimum position for an exit ramp terminal near an overhead structure. To achieve the optimized design and travel distance, locate the physical nose three seconds of travel time from the edge of the structure.

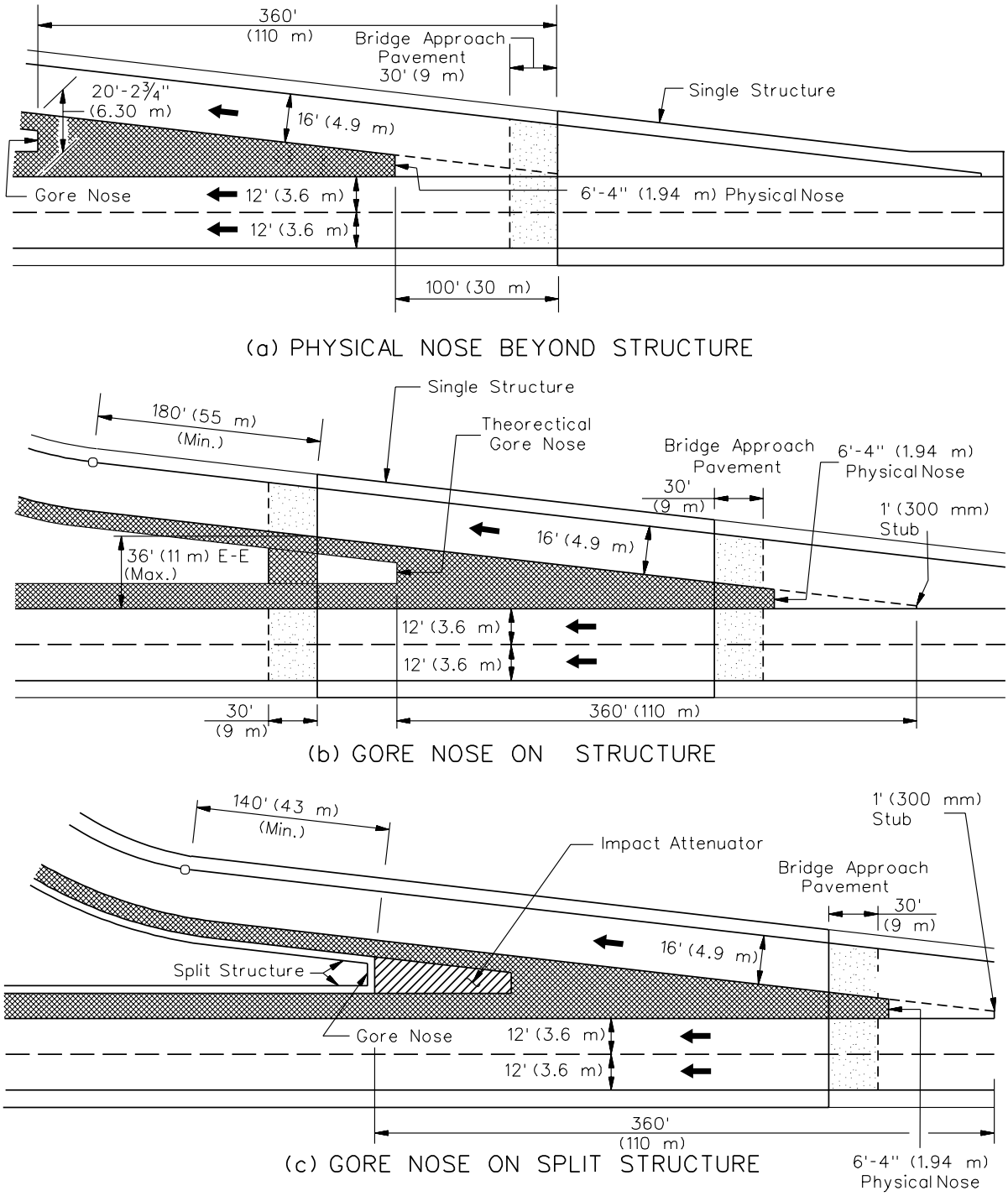

Note: Where an exit terminal is placed on a structure, the minimum cross slope is 1/4″/ft (2%). The 1/4″/ft (2%) is measured perpendicular to the edge of the mainline pavement, which will require a modification of the standard exit terminal profile.

EXIT TERMINALS ON STRUCTURES

Figure 37-6I

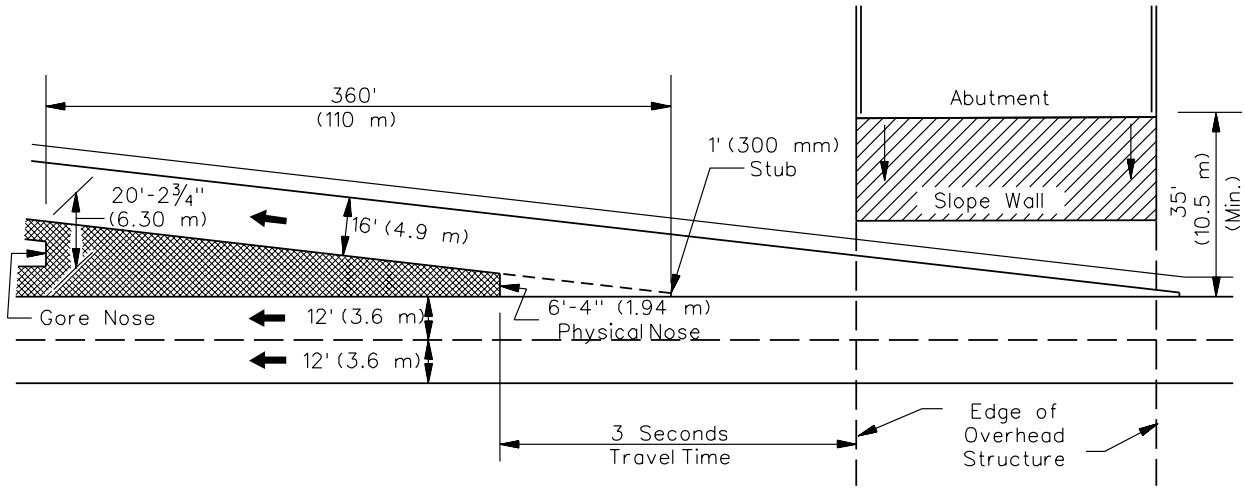

EXIT TERMINAL NEAR OVERHEAD STRUCTURE

Figure 37-6J

37-6.02 Entrance Ramps

37-6.02(a) Types

The entrance ramp terminal is a speed-change lane that permits ramp traffic to accelerate and merge with the high-speed traffic on the mainline. When designing the interchange, consider the following entrance ramp types:

1. Standard Entrance Terminal. There are two basic types of entrance freeway ramp terminals — the parallel design and the taper design. For all new and reconstructed ramps, use the taper design, except as noted in Section 37-6.02(b). Figure 37-6K and the *Illinois Highway Standards* illustrate the standard entrance ramp terminal design used by the Department. Use this ramp design for all single-lane entrances where the level of service of the ramp terminal is equal to or greater than that of the mainline. Entrance ramp terminals may carry a marked route provided the marked route is not a freeway or expressway. Where a freeway or expressway merges at an interchange, use the major convergence design as discussed in Section 37-6.04.

2. Entrance Terminal With an Auxiliary Lane. An auxiliary lane may be required after the entrance terminal:

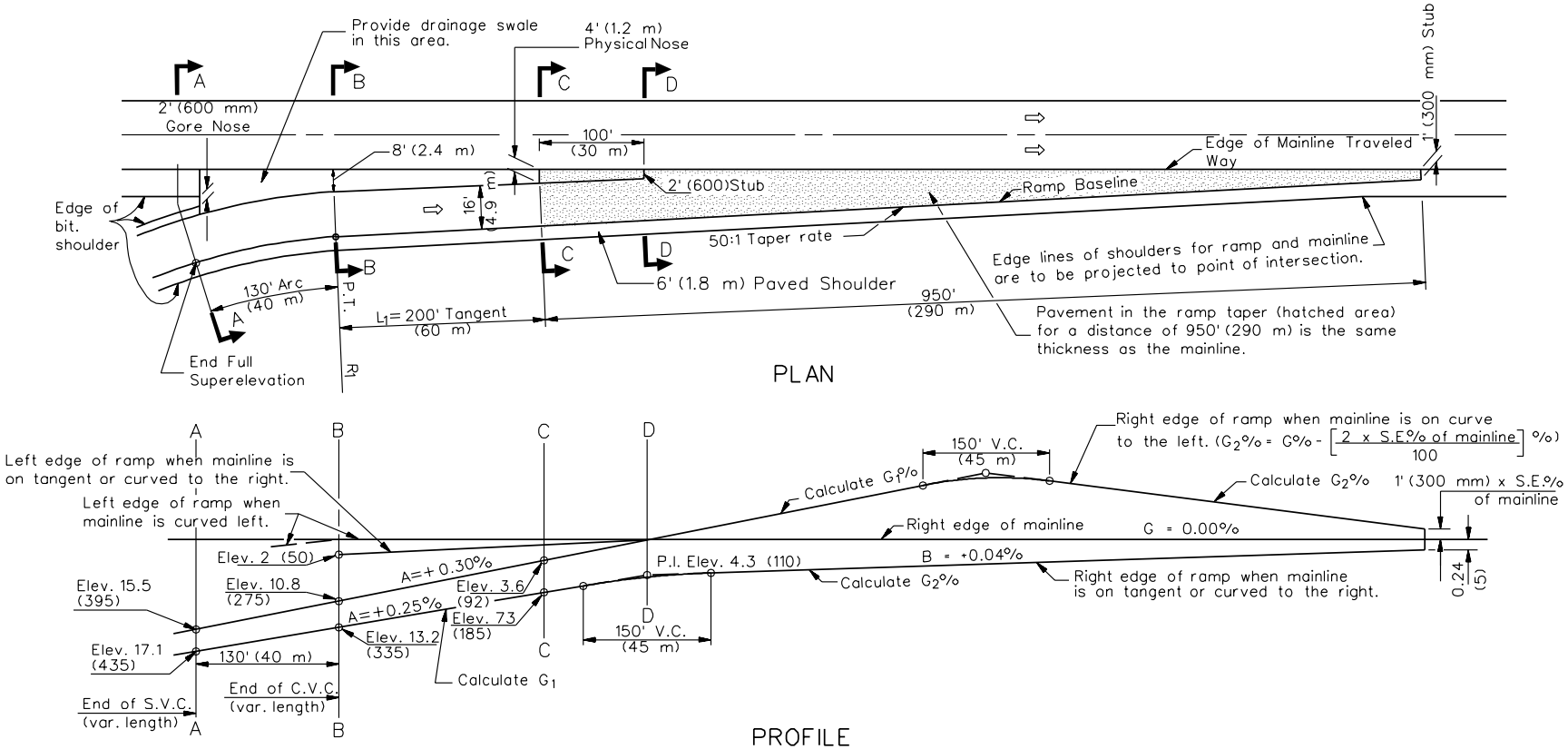

Notes:

1. *For values in %, divide by 100 to obtain vertical offsets. Vertical differences are in inches(mm).*
2. *Mainline grade is assumed to be 0%.*
3. *See* Highway Standards *for Sections B-B, C-C, and D-D.*

STANDARD ENTRANCE RAMP TERMINAL

Figure 37-6K

- to meet the requirements in Section 37-2.05, and/or
- where the entering traffic exceeds the appropriate service volume of a standard entrance terminal design but where a two-lane entrance ramp is not required.

Figure 37-6L illustrates the design criteria for an entrance terminal with an auxiliary lane. The final ramp radius typically is 760 ft (230 m), which requires a 200 ft (60 m) tangent section preceding the physical nose. Typically, the auxiliary lane should be at least 1000 ft (300 m). Where the final ramp radius is less than 760 ft (230 m), the length of the auxiliary lane will be based on the necessary acceleration distance as discussed in Section 37-6.02(b).

3. Two-Lane Entrances. Where the entrance design traffic exceeds the service volume of a single-lane entrance ramp terminal with an auxiliary lane, it may be necessary to provide a two-lane entrance terminal as illustrated in Figure 37-6M. Where a two-lane entrance ramp is required, an additional lane on the freeway is necessary to accommodate the additional traffic. This lane may be dropped 2500 ft (750 m) downstream or at the next interchange.

   If the two-lane entrance is preceded by a two-lane exit ramp terminal, an increase in the basic number of lanes will generally not be required. In this case, the added lane that results from the two-lane entrance is considered an auxiliary lane. Note that this design violates lane balance guidelines discussed in Section 37-2.03. Where the demand volume of the entering traffic exceeds this design or where the entering roadway is a freeway or expressway, use the major convergence design as discussed in Section 37-6.04.

37-6.02(b) Length

Consider the following when determining the appropriate length of an entrance terminal:

1. Capacity. Where the mainline and ramp will carry traffic volumes approaching the design capacity of the merge area, consider using an auxiliary lane entrance ramp design as discussed in Section 37-6.02(a).

2. Trucks. Where there are a significant number of trucks to impact the level of service on the freeway and ramp, acceleration lanes may need to be treated as truck-climbing lanes. The designer should reference the AASHTO publication *A Policy on Geometric Design of Highways and Streets* for truck acceleration rates. Typical areas where trucks might govern the ramp design include weigh stations, rest areas, truck stops, and transfer staging terminals. Also consider using truck acceleration criteria where there is substantial entering truck traffic and where the interchange crossroad has a high-skew angle or there is a significant crash history involving trucks attributable to an inadequate acceleration length.

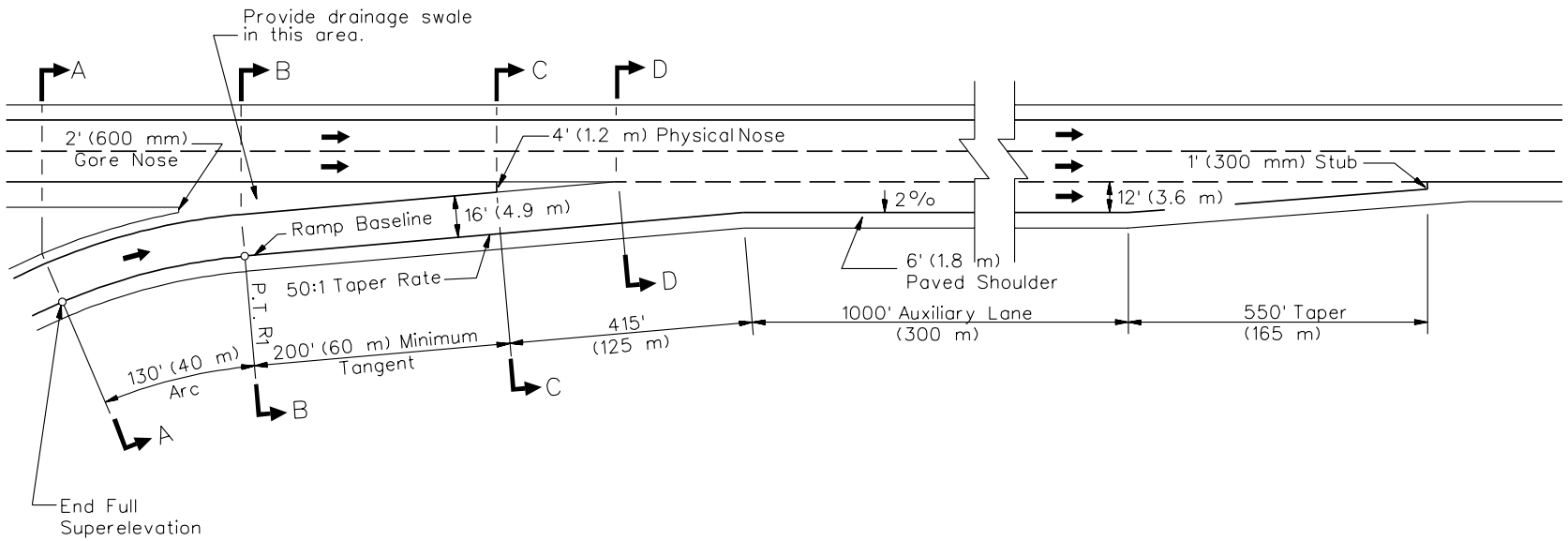

Notes:

1. *Develop cross sections A-A, B-B, C-C, and D-D in all cases during the preparation of the IDS.*
2. *See Figure 37-6K for Standard Entrance Ramp Terminal.*

ENTRANCE RAMP TERMINAL WITH AUXILIARY LANE

Figure 37-6L

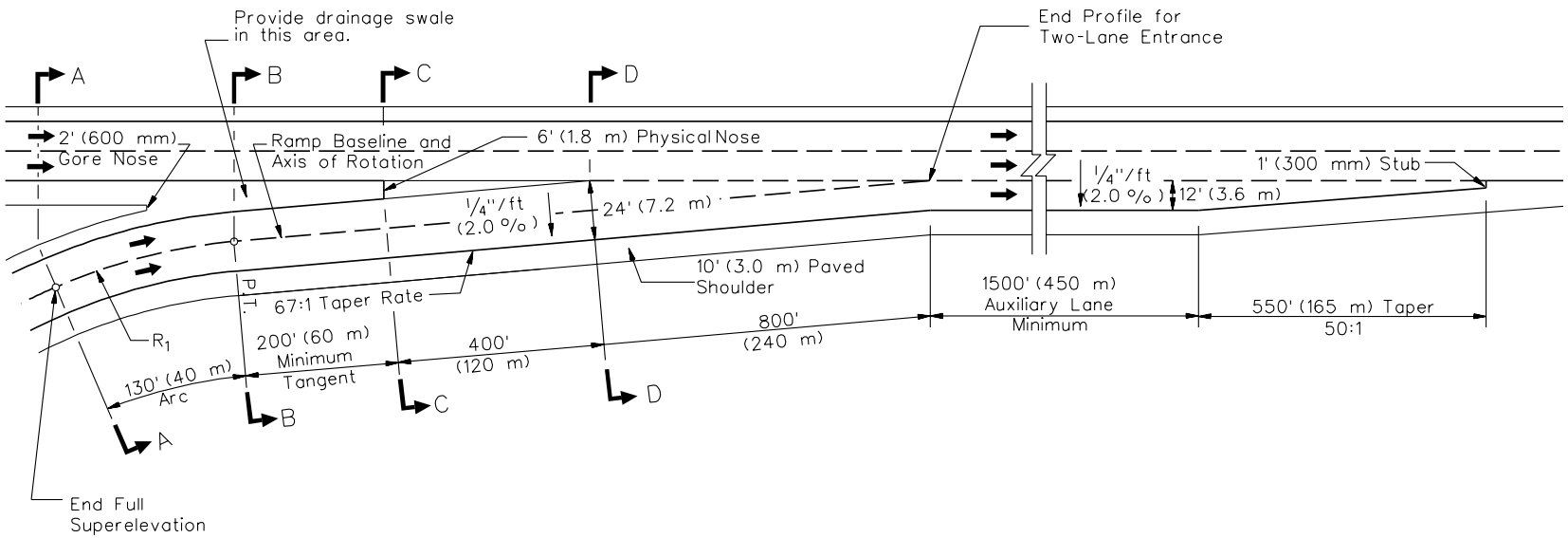

Note: Develop cross sections A-A, B-B, C-C, and D-D during preparation of the IDS.

TWO-LANE ENTRANCE RAMP TERMINAL

Figure 37-6M

3. Gradients. Where the gradient of the mainline and/or ramp exceeds +3%, the acceleration length may need to be adjusted. These adjustments are discussed in Section 36-2.03(e). For downgrades, use the standard entrance terminal design, and do not reduce the acceleration distance.

4. Horizontal Curves. The application of the acceleration criteria regarding horizontal curves preceding the entrance terminal are as follows:

   a. Design Speed. The design speed of the horizontal curve adjacent to an entrance terminal should be determined by open-roadway conditions. See Figure 37-4F and Chapter 32.

   b. Curve Radii/Tangent Lengths. Figure 37-6N provides the minimum controlling ramp curve radii (R_1) and the minimum tangent lengths (L_1) that should be used prior to the standard entrance terminal based on the mainline design speed.

5. Additional Lengths. If it has been determined that additional acceleration distance is required beyond that provided with the standard entrance terminal, the following options may be considered:

   a. Typical Design. If substantial additional distance is required for acceleration, use the auxiliary lane terminal design as shown in Figure 37-6L.

   b. Optional Design. If only a small additional distance is required to meet the necessary acceleration length, the additional distance may be gained by extending the L_1 distance. The designer must ensure that this will not create other undesirable aspects in the design of the ramp proper.

   c. Low-Volume Conditions. Where existing volumes on the mainline are low and where the slower entering vehicles will not reduce the level of service on the mainline, the use of the standard entrance terminal may be considered. The speed profile of merging trucks onto the mainline must be investigated and documented. However, provide sufficient right-of-way so that an auxiliary lane can be added in the future.

   d. Secondary Impacts. Before providing any additional acceleration lane length, the designer must consider its impacts (e.g., additional construction costs, wider structures, right-of-way impacts).

US Customary							
Mainline Design Speed (mph)							
70		60		50		40[2]	
R_1 (ft)	L_1 (ft)	R_1 (ft)	L_1 (ft)	R_1 (ft)	L_1 (ft)	R_1 (ft)	L_1 (ft)
835	200	760	200	465	200	200	100
760	200	465	200	350	200	170	100
				250	200	105	100
Metric							
Mainline Design Speed (km/h)							
110		100		80		60[2]	
R_1 (m)	L_1 (m)	R_1 (m)	L_1 (m)	R_1 (m)	L_1 (m)	R_1 (m)	L_1 (m)
252	60	229	60	175	60	123	30
229	60	175	60	123	60	82	30
				82	60	55	30

Notes:

1. *R_1 is the radius of curve connecting to L_1 of the standard entrance terminal. See Figure 37-6K.*
2. *Use with C-D Roads only.*
3. *This figure is applicable to both 8% and 6% superelevation rates.*

MINIMUM CURVE RADII (R_1) AND TANGENT LENGTHS (L_1) FOR ENTRANCE TERMINALS

Figure 37-6N

37-6.02(c) Sight Distance

Decision sight distance desirably should be provided for drivers on the mainline approaching an entrance terminal. They need sufficient distance to see the merging traffic and adjust their speed or change lanes to allow the merging traffic to enter the freeway. Likewise, drivers on the entrance ramp need to see a sufficient distance to locate gaps in the traffic stream for merging. Section 31-3 discusses decision sight distance in more detail.

37-6.02(d) Superelevation and Cross Slopes

Standard entrance terminal designs have been developed to include appropriate superelevation transitions and desirable crossover crown conditions where the terminal connects onto the mainline; see Figure 37-6K and the *Highway Standards*. When an IDS is prepared, develop and show on the IDS the detailed cross section at A-A as indicated in Figure 37-6K.

37-6.02(e) Gore Area

The following presents the nose criteria for entrance gores:

1. Physical Nose. This is a point located at Section C-C, as illustrated in Figure 37-6K and has a dimensional width of 4 ft (1.2 m).

2. Gore Nose. This is a point where the sodded area ends and the paved shoulders connect. The gore nose, excluding the mainline right shoulder and ramp left shoulder, is 2 ft (600 mm) wide as shown in Figure 37-6K.

37-6.03 Ramp/Roadway Divergence Applications

37-6.03(a) Major Divergences

Where two freeways separate, provide a major divergence as shown in Figures 37-6O, 37-6P, and 37-3Q. The most important concept in the use of a major divergence is that if the route turns at an interchange, the physical divergence of the roadways should also occur in the same direction. To maintain lane balance, an additional interior lane will be required preceding the divergence. The widening of the interior lane from 12 ft to 24 ft (3.6 m to 7.2 m) should occur in a distance of 1000 ft (300 m). This provides a driver in the center lane the option of selecting either direction of travel without having to change lanes.

Add additional lanes to the side of the lesser-preferred route. Check for lane balance. Pavement joints should normally favor the freeway with the higher volume of traffic. An exception to this rule is that in most cases, regardless of the traffic volume split, the Interstate is considered the preferred

route. Provide a minimum tangent length of 200 ft (60 m) beyond the 6 ft (1.8 m) physical nose to facilitate a change of cross slope preceding the initial curve of any diverging roadway.

Where a major divergence is required but the preferred design of an equal split of the roadways cannot be achieved due to the existing freeway alignment, a modified divergence design can be used as shown in Figure 37-6P. In addition, where a divergence design is required and sufficient right-of-way is not available to build the one-sided divergence and where the diverging traffic volume is not significant, a two-lane exit terminal design may be considered. However, before using the two-lane exit design, coordination and approval must be received from BDE.

37-6.03(b) Minor Divergences

Consider a minor divergence for the following situations; see Figure 37-6R:

- where a highway terminates into separate single lane ramps (e.g., at a trumpet interchange);
- where a ramp or roadway separates within a complex interchange (e.g., directional interchanges); or
- as part of a collector-distributor roadway design.

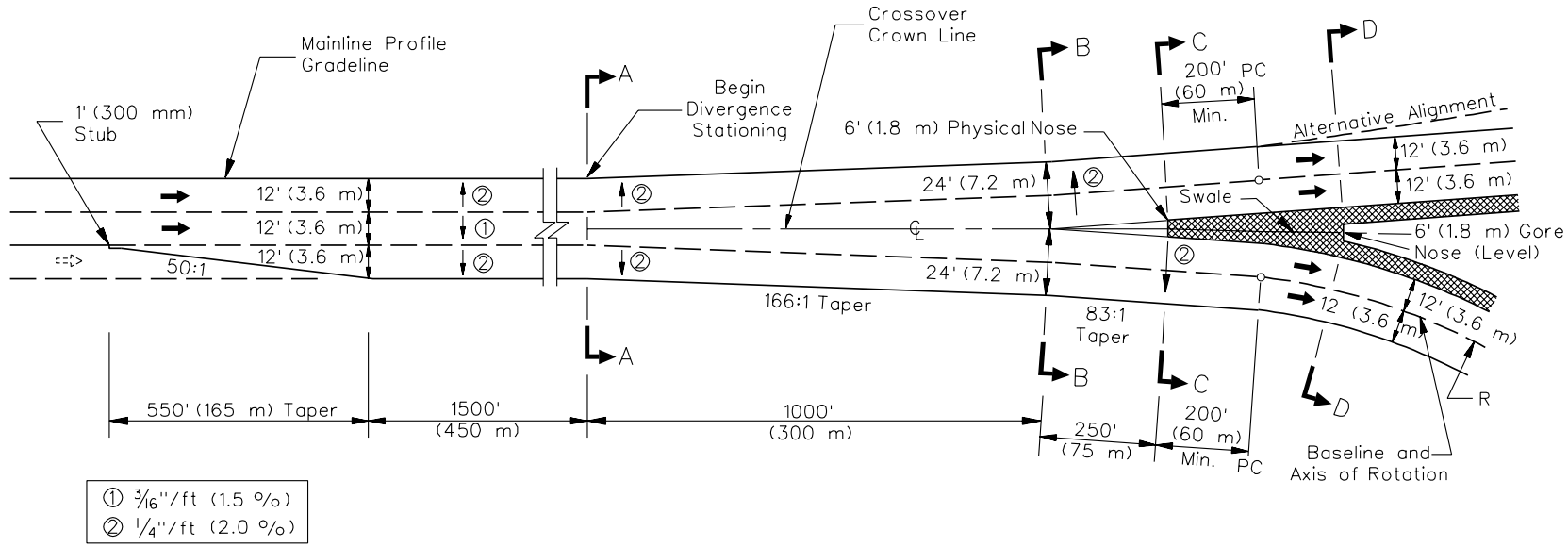

Notes:

1. *Develop cross sections A-A, B-B, C-C, and D-D during the preparation of the IDS.*
2. *The divergence can be designed to divert traffic from either side of an existing roadway.*
3. *Full superelevation is attained at Section D-D.*

EQUAL-SPLIT MAJOR DIVERGENCE
(Two- or Three-Lane Approaching Roadway with Two-Lane Roadways Diverging)

Figure 37-6O

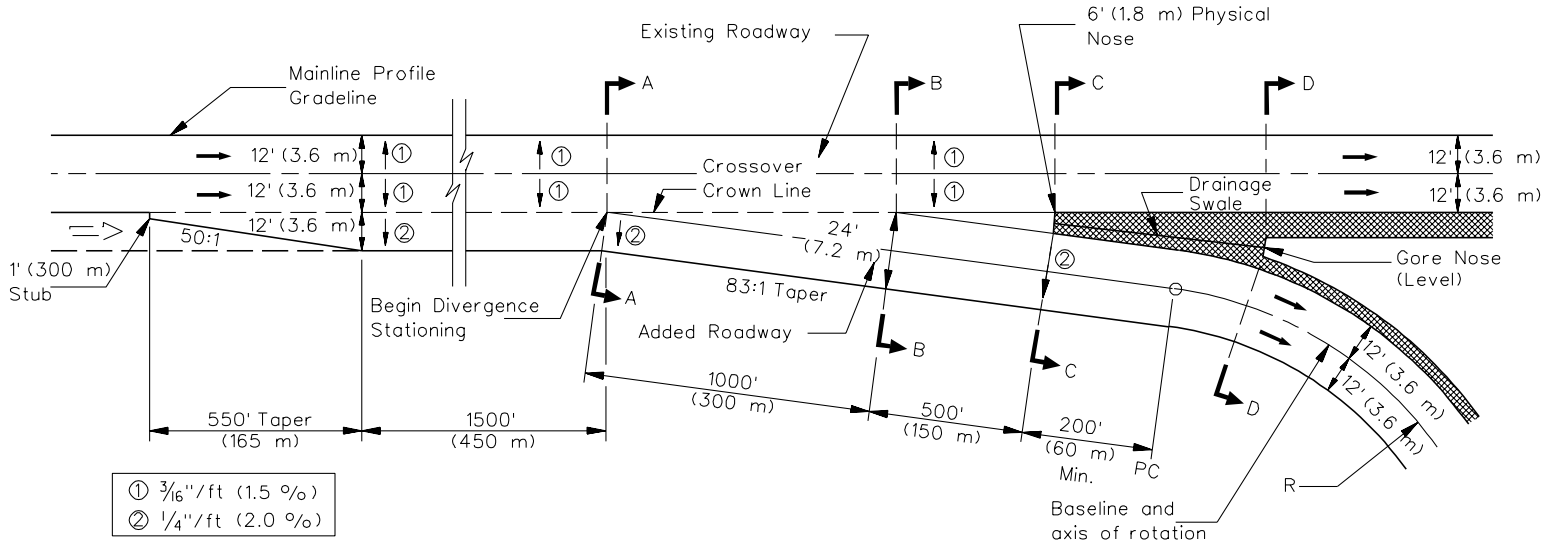

Notes:

1. *Develop cross sections A-A, B-B, C-C, and D-D during the preparation of the IDS.*
2. *The divergence can be designed to divert traffic from either side of an existing roadway.*
3. *Full superelevation is attained at Section D-D.*

ONE-SIDED MAJOR DIVERGENCE
(Two- or Three-Lane Approaching Roadway with Two-Lane Roadway Diverging)

Figure 37-6P

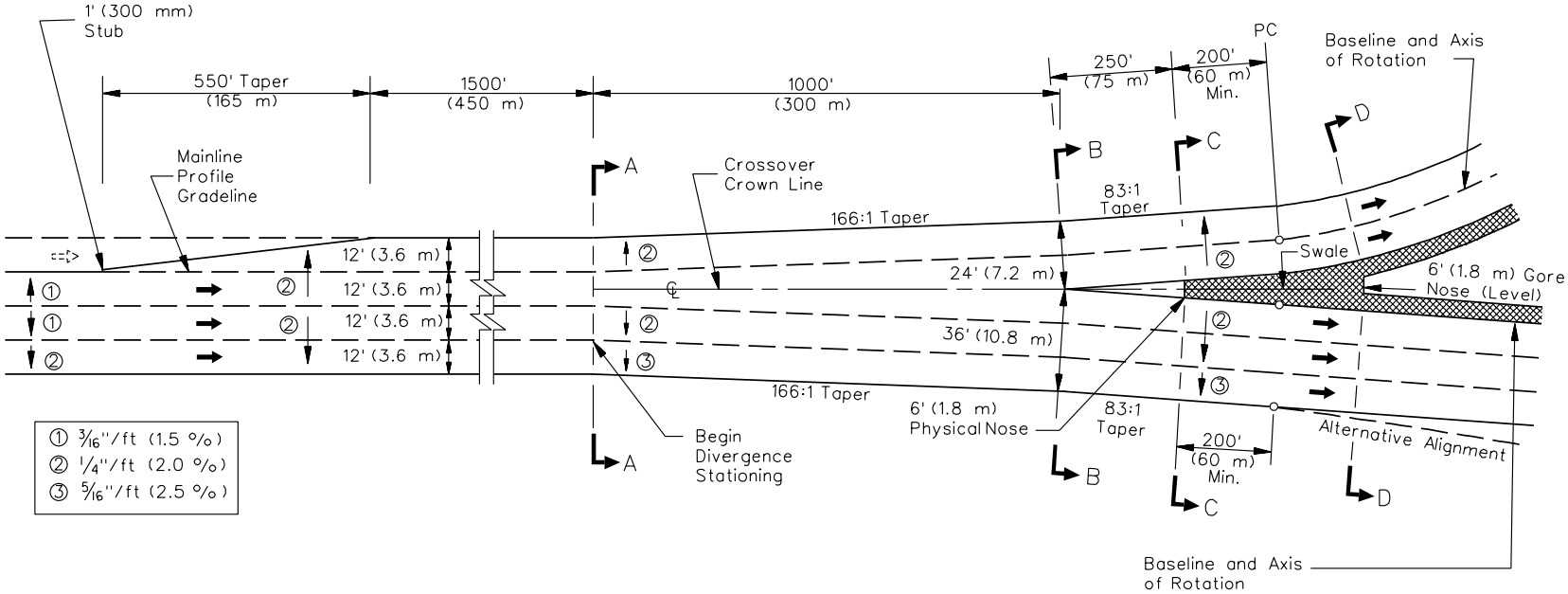

Notes:

1. *Develop cross sections A-A, B-B, C-C, and D-D during the preparation of the IDS.*
2. *The divergence can be designed to divert traffic from either side of an existing roadway.*
3. *Where a horizontal curve is provided downstream from the divergence, full superelevation is attained at Section D-D.*

MAJOR DIVERGENCE
(Three- or Four-Lane Approaching Roadway with Two- and Three-Lane Roadways Diverging)

Figure 37-6Q

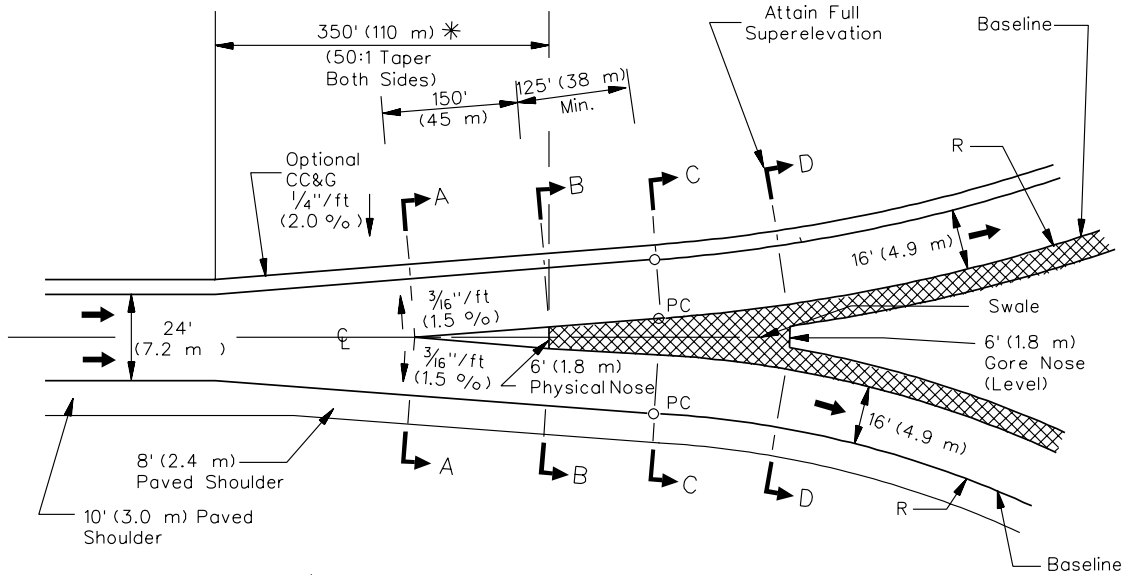

✳ When one side is tangent, use 420' (130 m) (30:1 taper).

TYPE A - 24 ft (7.2 m)

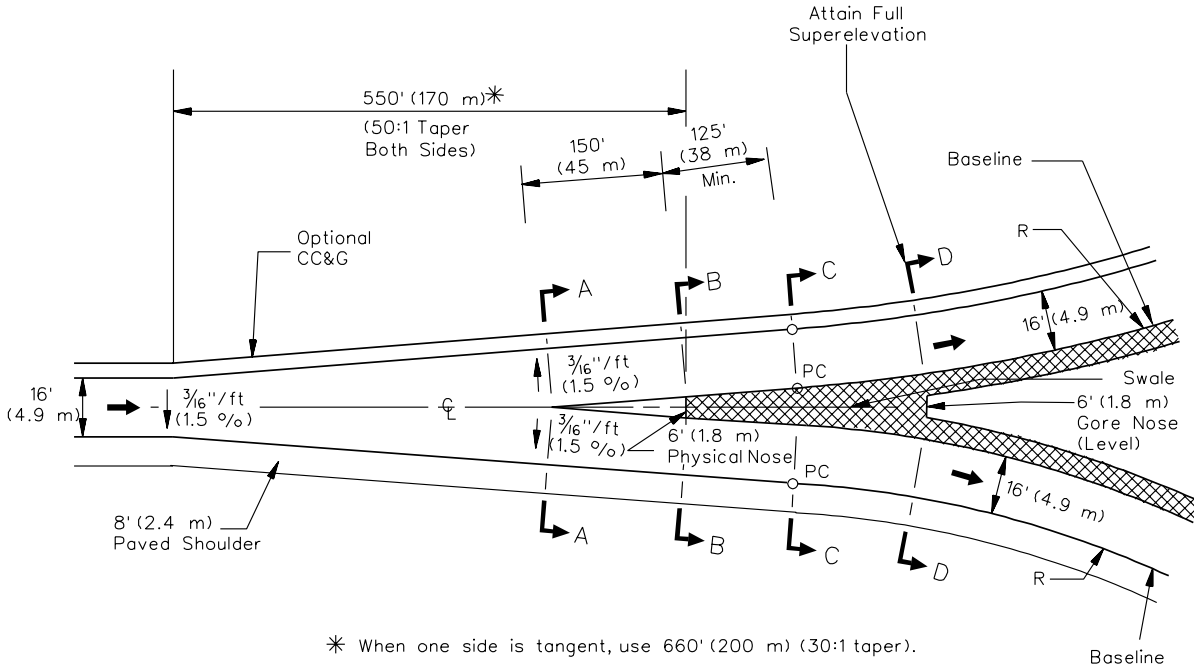

✳ When one side is tangent, use 660' (200 m) (30:1 taper).

TYPE B - 16 ft (4.9 m)

Note: Develop cross sections A-A, B-B, C-C, and D-D during the preparation of IDS.

MINOR DIVERGENCES

Figure 37-6R

37-6.04 Ramp/Roadway Convergence Applications

37-6.04(a) Major Convergences

Where two freeways merge, provide a major convergence design as illustrated in Figure 37-6S. The number of lanes downstream from the convergence generally will be one less than the combined total of the two approaching roadways. Under some circumstances, traffic demand may require that the number of lanes departing the merge area be the same number as the two approaching roadways.

Typically, a lane drop will be required downstream from the convergence. The most desirable and typical design will be to drop the right slow-speed lane versus the left high-speed lane. However, it also may be desirable to drop the left lane of the merging roadway if it is serving the lowest volume per lane. This design should be reviewed during the development of the IDS.

37-6.04(b) Minor Convergences

Consider a minor convergence for the following situations; see Figure 37-6T:

- where interchange ramps converge to form either a single or double lane roadway (e.g., trumpet interchanges) within complex interchanges; or
- as part of a collector-distributor roadway design.

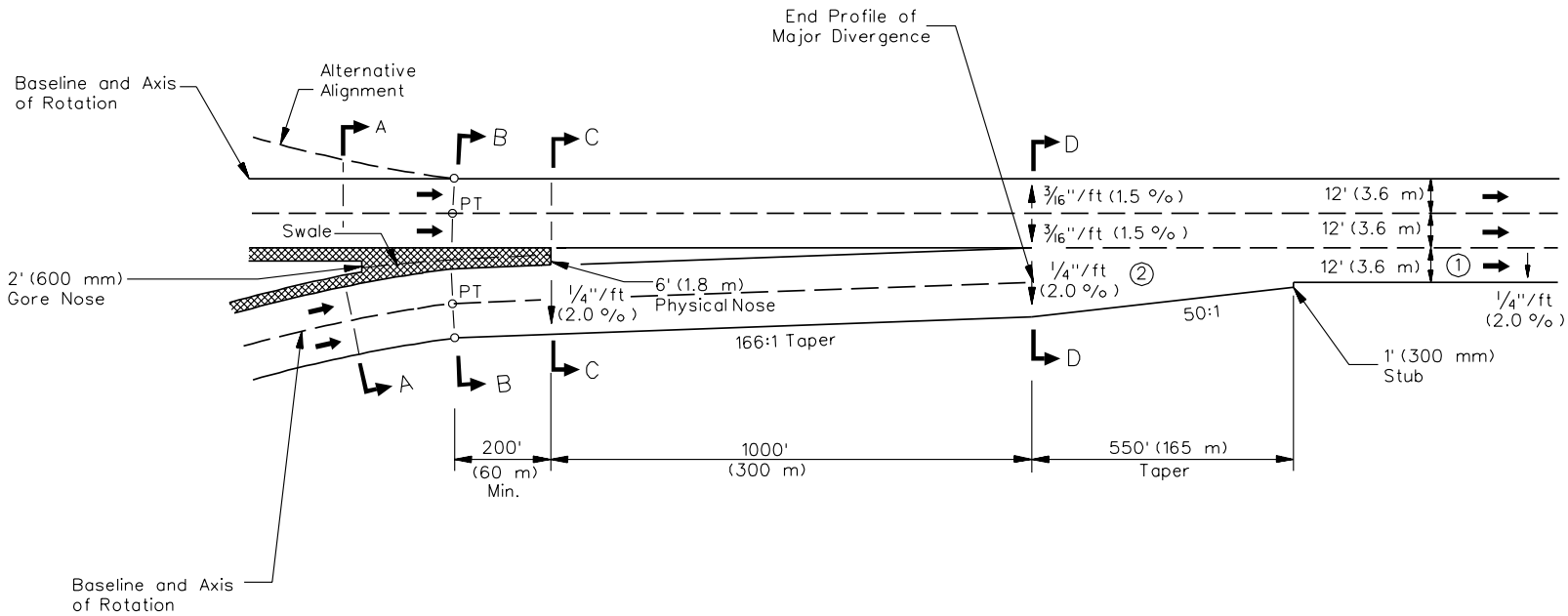

Notes:

1. *If the right-hand lane is proposed to be dropped for capacity reasons, provide a minimum 1500 ft (450 m) auxiliary lane and a 550 ft (165 m).*
2. *The convergence can be designed to merge from either side.*
3. *Develop cross sections A-A, B-B, C-C, and D-D during the preparation of IDS.*

MAJOR CONVERGENCE

Figure 37-6S

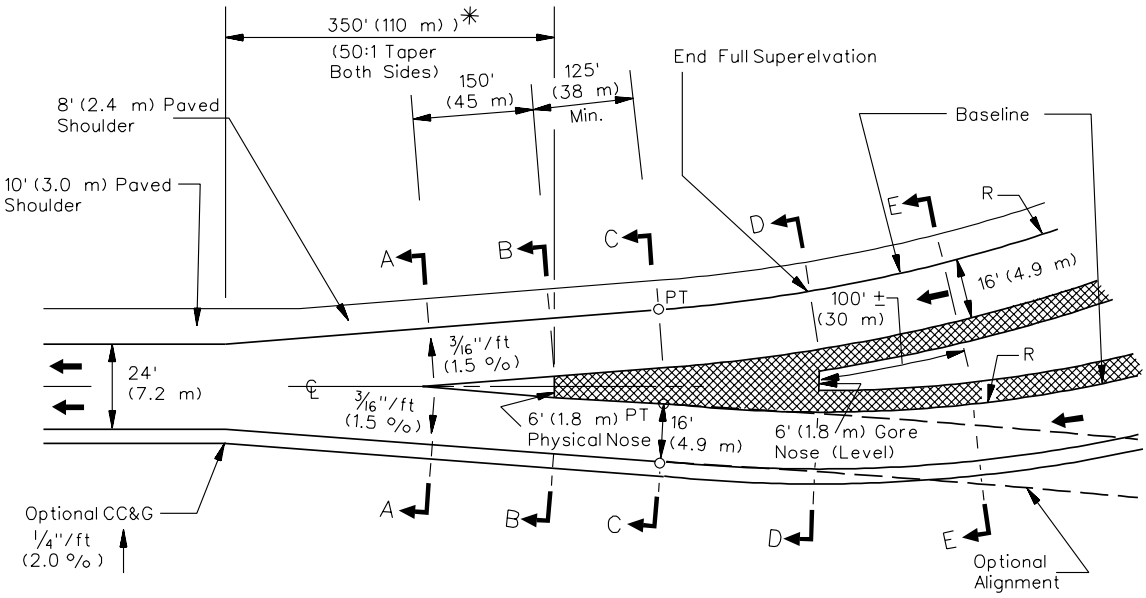

✳ When one side is tangent, use 420' (130 m) (30:1 taper)

TYPE A - 24 ft (7.2 m)

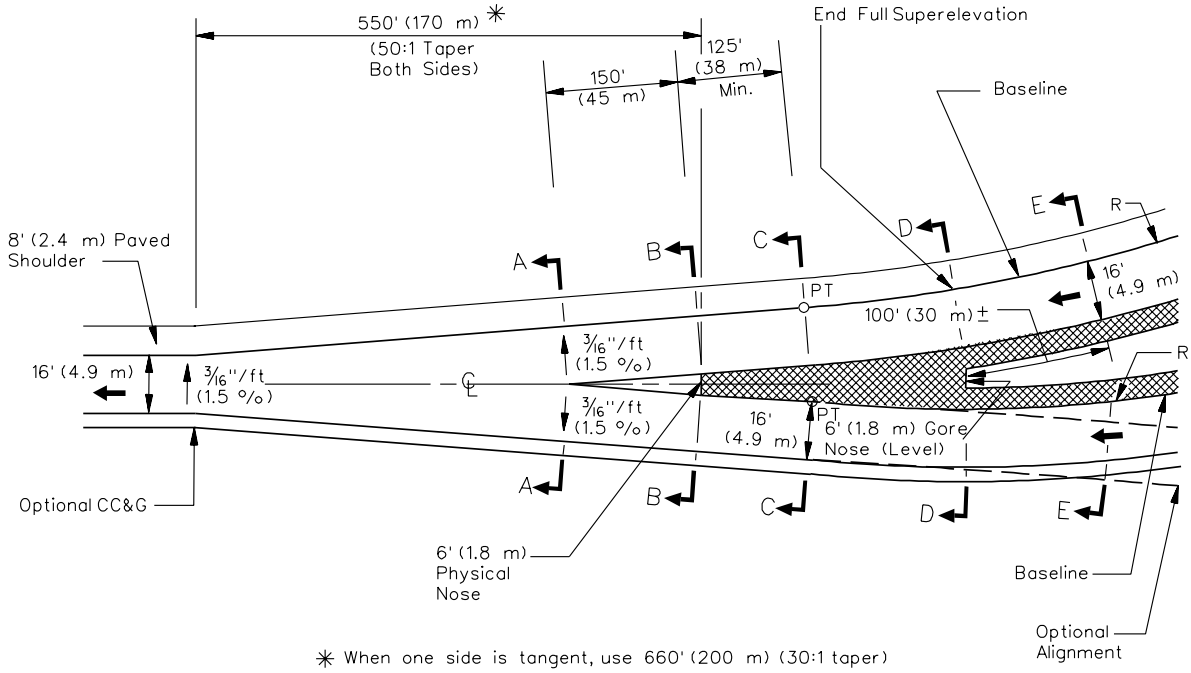

✳ When one side is tangent, use 660' (200 m) (30:1 taper)

TYPE B - 16 ft (4.9 m)

Notes:

1. *Develop cross sections A-A, B-B, C-C, D-D, and E-E during the preparation of IDS.*
2. *Ramp cross slope should be determined by downstream horizontal alignment.*

MINOR CONVERGENCES

Figure 37-6T

37-7 REFERENCES

1. *A Policy on Geometric Design of Highways and Streets*, AASHTO, 2001.

2. "Agreement Relating to Use of and Access to Rights-of-Way – Interstate System," 23 USC 111, *United State Code*.

3. "Design Standards for Highways," 23 CFR 625, *Code of Federal Regulations*, Title 23 (Highways), Part 625, April 1, 1997.

4. "Additional Interchanges to the Interstate System," *Federal Register*, Vol. 55, No. 204, October 22, 1990.

5. "Additional Interchanges to the Interstate System," *Federal Register*, Vol. 63, No. 28, February 11, 1998.

6. "Delegation of Authority – Requests for New or Revised Access Points on Completed Interstate Highways," FHWA Region Office Memorandum to FHWA Division Administrators, March 12, 1997.

7. FHWA Headquarters Memorandum to FHWA Region Offices, August 19, 1996.

8. "Access Control on Non-Interstate NHS Freeways," FHWA Region Office Memorandum, December 19, 1997.

9. NCHRP 345, *Single Point Urban Interchange, Design and Operations Analysis*, Transportation Research Board, 1991.

10. "A Comparison of Two Diamond Interchange Forms in Urban Areas," ITE Journal, May 1989.

11. "An Operational Comparison of the Single-Point Urban and Tight-Diamond Interchanges," ITE Journal, April 1993.

12. *Guidelines for Preliminary Selection of the Optimum Interchange Type for Specific Location*, FHWA/VTRC99-R15, FHWA, 1999.

13. *Highway Capacity Manual*, 2000, Transportation Research Board, 2000.

14. *Highway Safety Design and Operations Guide*, AASHTO, 1997.

15. "Distance Requirements for Frontage-Road Ramps to Cross Streets: Urban Freeway Design," TRR 682, Transportation Research Board, 1978.

16. NCHRP 3-55(5) *Capacity and Quality of Service of Weaving Areas*, Transportation Research Board, 1996.

17. *Manual on Uniform Traffic Control Devices*, *Millennium Edition*, FHWA, ATSSA, AASHTO, and ITE, 2001.

18. *Interchange Operations on the Local Street Side*, Transportation Research Circular No. 430, Transportation Research Board, 1994.

19. "Geometric Design Features of Single-Point Urban Interchanges," TRR 1385, Transportation Research Board, 1993.

20. "Interchange Ramp Geometrics — Alignment and Superelevation Design," TRR 1385, Transportation Research Board, 1993.

21. *IDOT Highway Standards*, current edition.