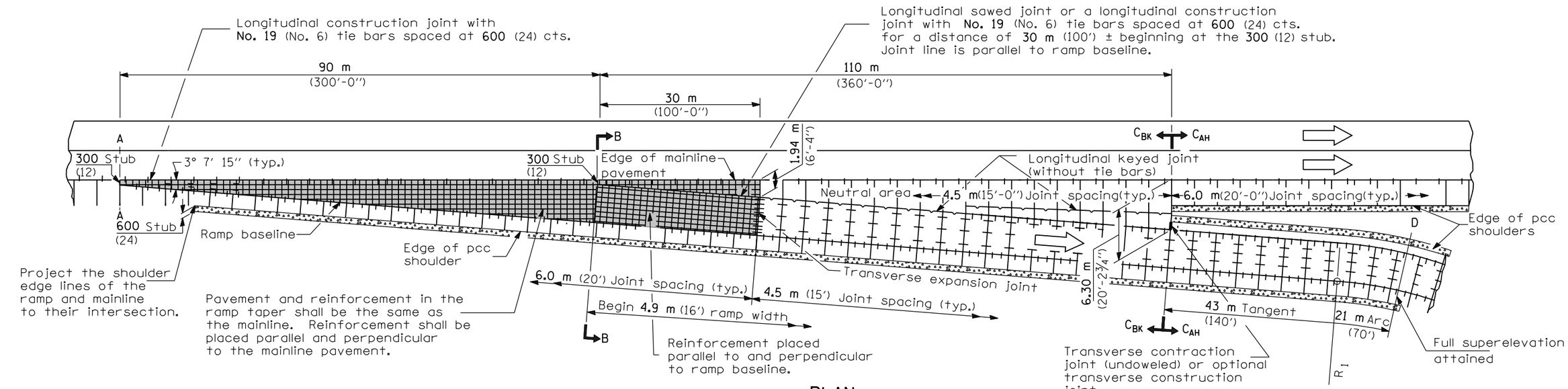

See Sheet 3 for GENERAL NOTES

Illinois Department of Transportation

PASSED January 1, 2004
Michael Briand
ENGINEER OF POLICY AND PROCEDURES

APPROVED January 1, 2004
Michael L. Hine
ENGINEER OF DESIGN AND ENVIRONMENT

ISSUED 1-1-97

DATE	REVISIONS
1-1-04	Minor corrections
	of joint information.
1-1-03	Corrected stub location,
	title and minor errors.

EXIT RAMP TERMINAL

(JOINTED PCC RAMP PAVEMENT ADJACENT TO CRC MAINLINE PAVEMENT)

(Sheet 1 of 3)

STANDARD 420306–05

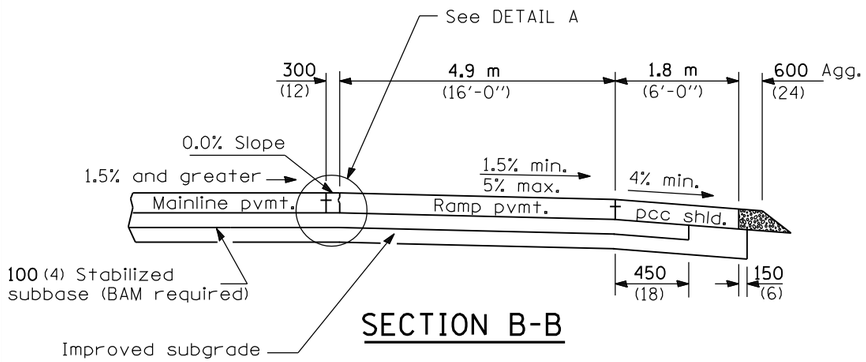

SECTION B-B

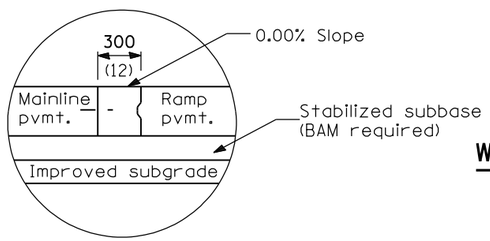

DETAIL A

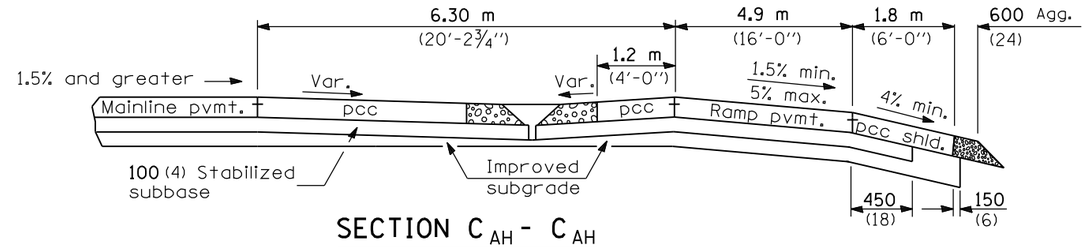

SECTION C_{AH} - C_{AH}

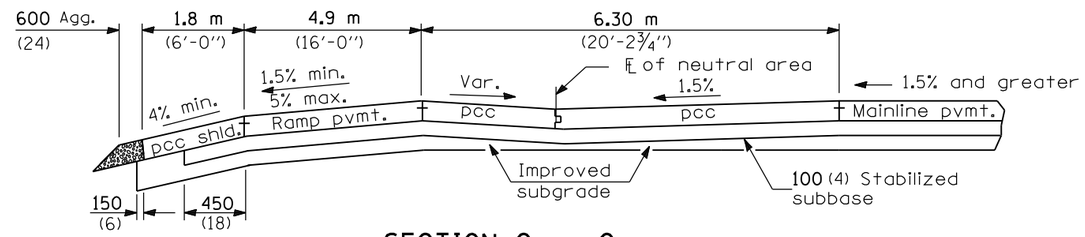

SECTION C_{BK} - C_{BK}

BK = Back
AH = Ahead

WHEN MAINLINE IS ON TANGENT OR CURVED TO THE RIGHT

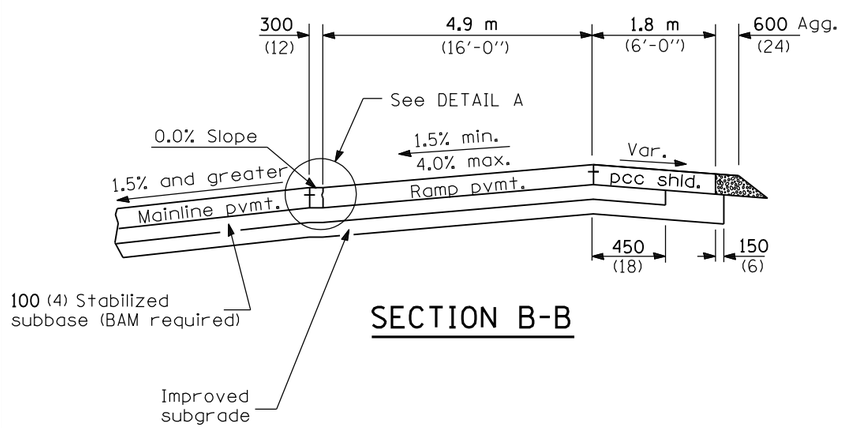

SECTION B-B

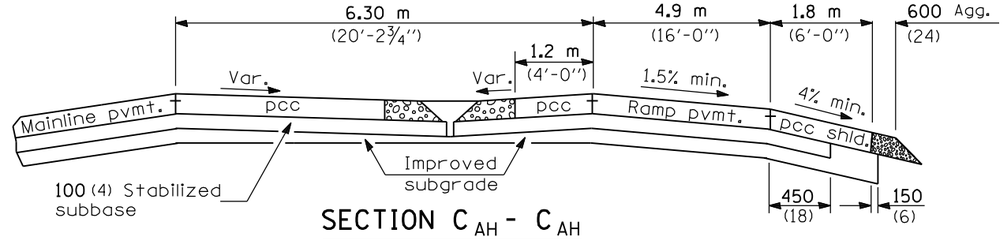

SECTION C_{AH} - C_{AH}

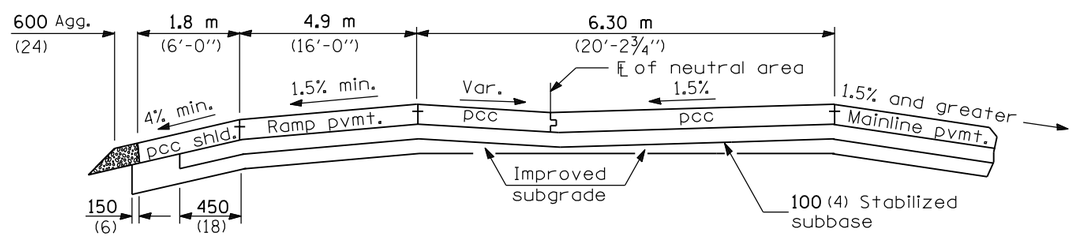

SECTION C_{BK} - C_{BK}

See Sheet 3 for GENERAL NOTES

WHEN MAINLINE IS CURVED TO THE LEFT

Illinois Department of Transportation

PASSED January 1, 2004
Michael Briand
ENGINEER OF POLICY AND PROCEDURES
APPROVED January 1, 2004
Michael L. Hine
ENGINEER OF DESIGN AND ENVIRONMENT

ISSUED 1-1-97

EXIT RAMP TERMINAL

(JOINTED PCC RAMP PAVEMENT
ADJACENT TO CRC MAINLINE PAVEMENT)

(Sheet 2 of 3)

STANDARD 420306–05

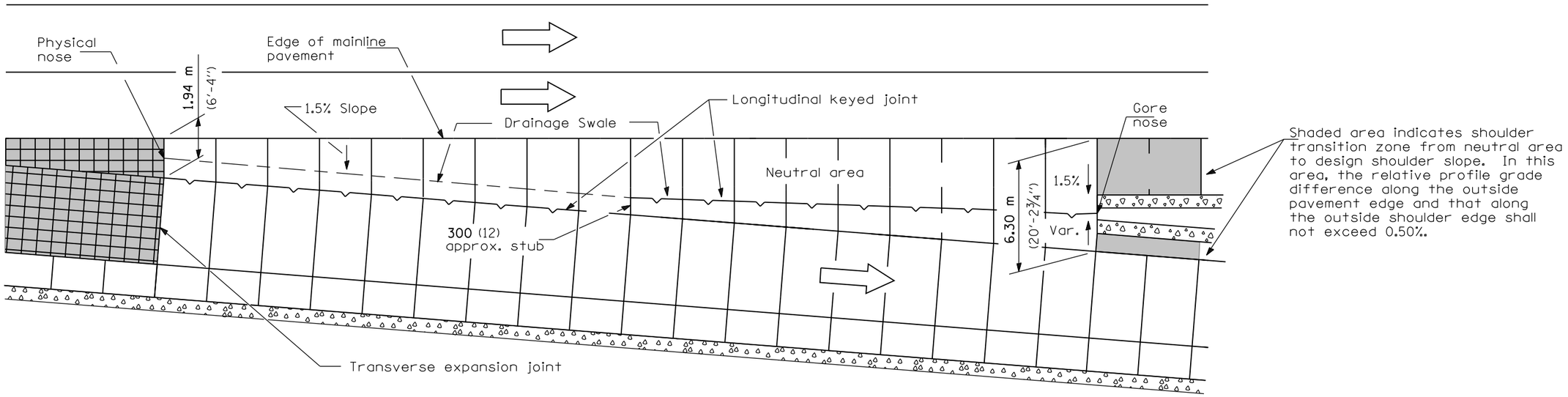

DETAILS FOR DRAINAGE IN NEUTRAL AREA

① Vertical offsets in mm for right edge of ramp, when R_1 = 230 m			
Sections	Mainline on Tangent	Mainline Curved Right	Mainline Curved Left
A	- 5	S.E.% ML x 300	S.E.% ML x 300 ②
B	- 74	S.E.% ML x 4900	S.E.% ML x 4900 ②
C	- 74	S.E. % ML x 4900	- 74
D	- 392	- 392	- 392

Vertical offsets in inches for right ① edge of ramp, when R_1 = 765′			
Sections	Mainline on Tangent	Mainline Curved Right	Mainline Curved Left
A	- 0.18	S.E. % ML x 12	S.E. % ML x 12 ②
B	- 3.0	S.E. % ML x 192	S.E. % ML x 192 ②
C	- 3.0	S.E. % ML x 192	- 3.0
D	- 15.4	- 15.4	- 15.4

① Vertical offset values are calculated and based on the right edge of mainline pavement at 0.0 % grade.

② The vertical offsets of these points are above the mainline pavement and lie on an upgrade in relationship to the mainline grade.

③ S.E. = Superelevation Rate

GENERAL NOTES

The initial ramp grade (G_2) is based on the line generated through the PI that is 32 m past Section C-C and the point created by the vertical offset at Section D-D.

See plans for actual grades.

All pavement joints shall be detailed as shown on Standards 420001 and 483001.

See Standard 483001 for ramp shoulder details.

In the neutral area, provide a swale and flush inlet to enhance drainage.

When using grades expressed in %, the grade values shall be divided by 100 to obtain vertical offsets.

Where an exit ramp terminal is proposed adjacent to a mainline horizontal curve, construct the edge of the terminal by using offset widths, and for the terminal segment downstream from Section C-C to R_1, construct the ramp as a 43 m tangent section.

All dimensions are in millimeters (inches) unless otherwise shown.

Illinois Department of Transportation

PASSED January 1, 2004
Michael Briand
ENGINEER OF POLICY AND PROCEDURES
APPROVED January 1, 2004
Michael L. Heine
ENGINEER OF DESIGN AND ENVIRONMENT

ISSUED 1-1-97

EXIT RAMP TERMINAL

(JOINTED PCC RAMP PAVEMENT ADJACENT TO CRC MAINLINE PAVEMENT)

(Sheet 3 of 3)

STANDARD 420306-05