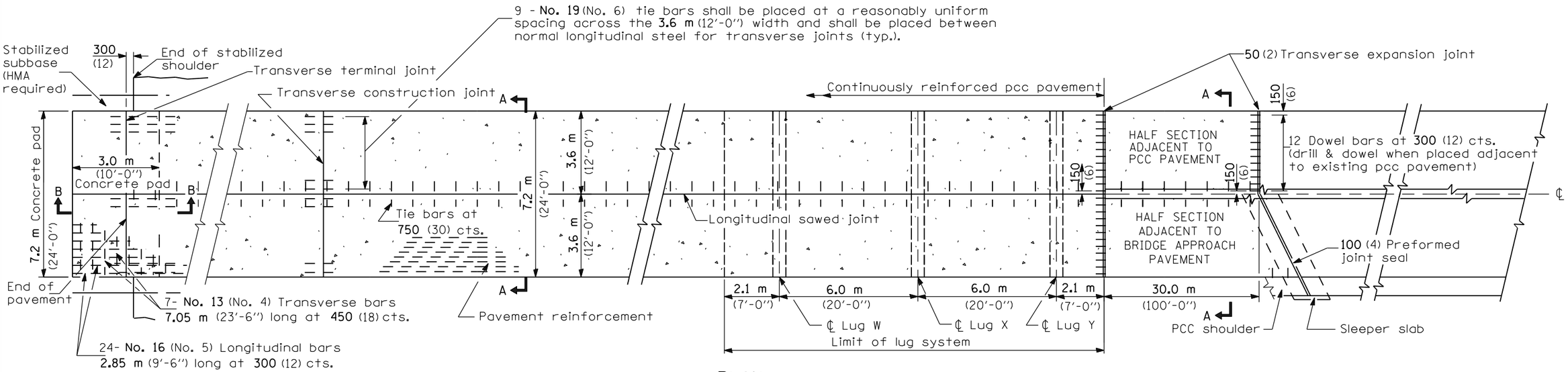

PLAN

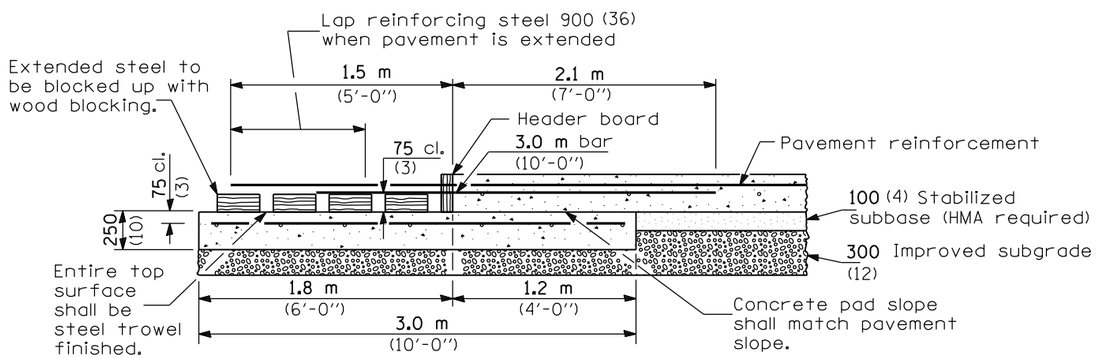

TRANSVERSE TERMINAL JOINT

SECTION B-B

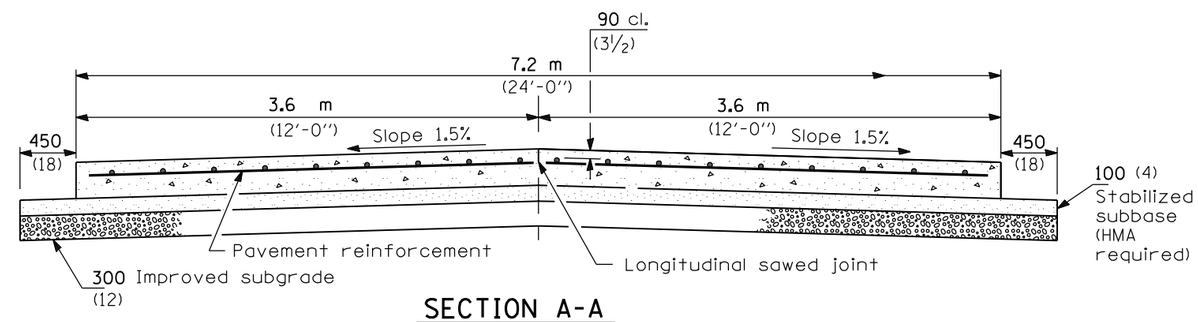

SECTION A-A

(TYPICAL 2-LANE WITH SHOULDERS)

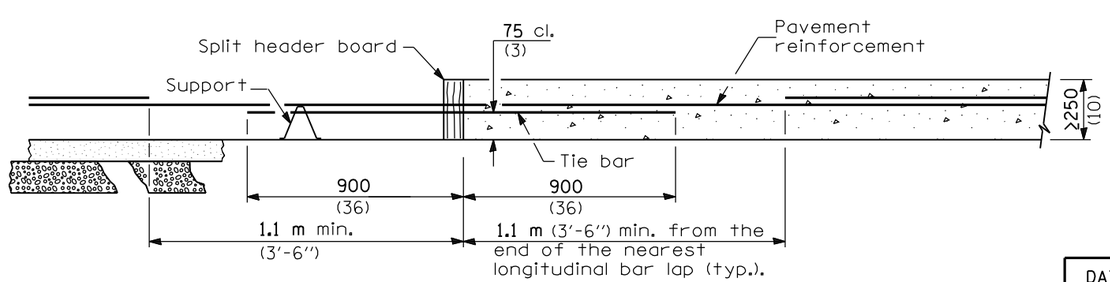

TRANSVERSE CONSTRUCTION JOINT

GENERAL NOTES

See Standard 421001 for details of pavement reinforcement.

See Standards 420001 and 420401 for joint details not shown.

All dimensions are in millimeters (inches) unless otherwise shown.

Illinois Department of Transportation

PASSED January 1, 2007
ENGINEER OF POLICY AND PROCEDURES

APPROVED January 1, 2007
ENGINEER OF DESIGN AND ENVIRONMENT

ISSUED 1-1-97

DATE	REVISIONS
1-1-07	Switched to Hot-Mix
	Asphalt (HMA)
	terminology.
1-1-04	Rev. width of trans.
	expansion joint.

7.2 m (24') CRC PAVEMENT

(WITH LUG SYSTEM)

(Sheet 1 of 2)

STANDARD 421201-05

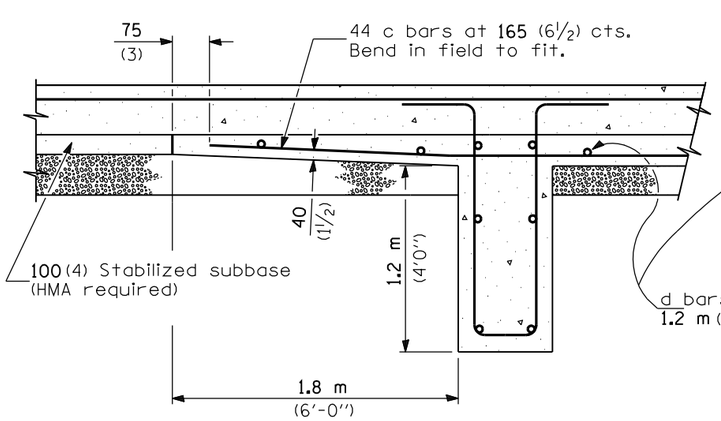

SECTION AT LUG W

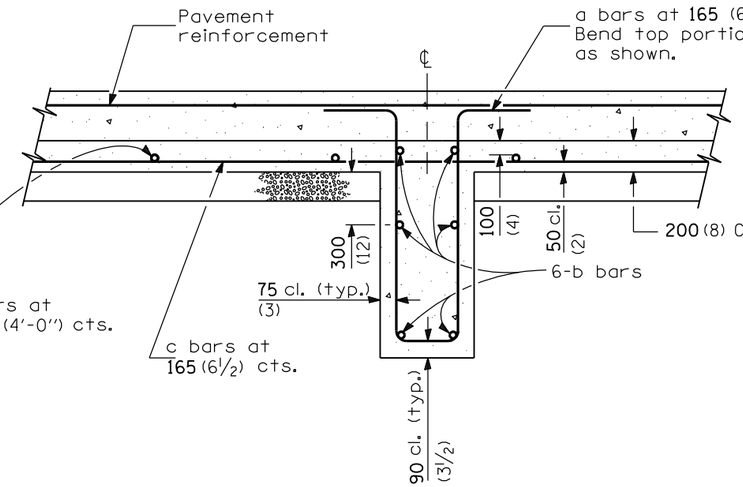

SECTION AT LUG X

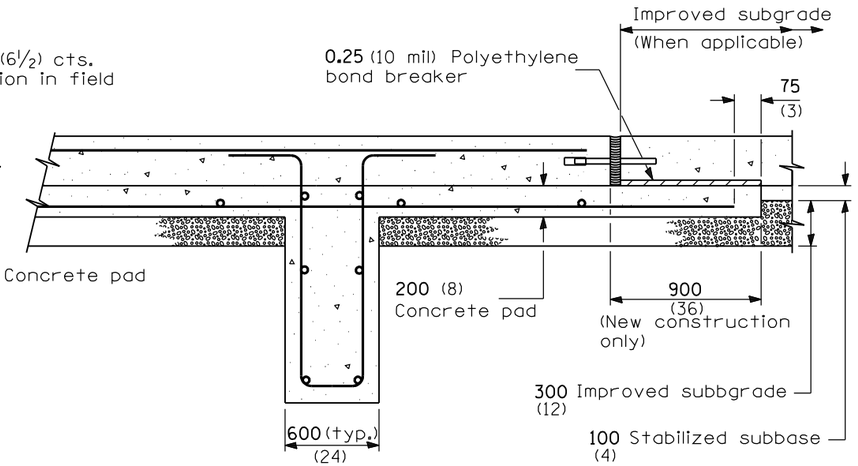

SECTION AT LUG Y

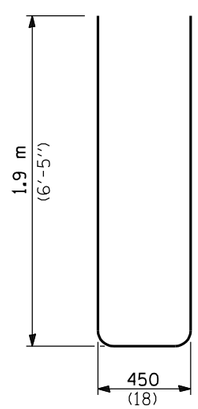

BAR a

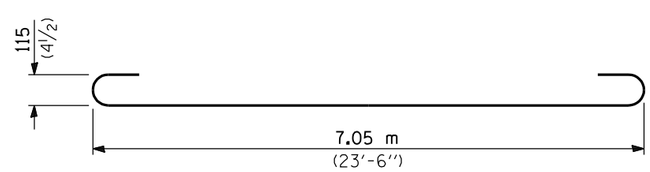

BAR b

MATERIALS REQUIRED FOR (1) ONE LUG SYSTEM

(Excluding Pavement Concrete and Pavement Reinforcement)

Bar	Qty.	Size	Length	Shape
a	132	No. 25 (No. 8)	4.25 m (14′-0″)	
b	18	No. 16 (No. 5)	7.43 m (24′-9″)	
c	132	No. 16 (No. 5)	6.10 m (20′-0″)	
d	28	No. 13 (No. 4)	3.52 m (11′-9″)	

Concrete, m^3 (cu. yds.)	15.6 (21.33)
Reinforcing Bars, kg (lbs.)	3800 (8372)
Concrete Pad, m^2 (sq. yds.)	104 (128)
Improved Subgrade, m^2 (sq. yds.)	117 (144)

All dimensions are in millimeters (inches) unless otherwise shown.

Illinois Department of Transportation

PASSED January 1, 2007

ENGINEER OF POLICY AND PROCEDURES

APPROVED January 1, 2007

ENGINEER OF DESIGN AND ENVIRONMENT

ISSUED 1-1-97

7.2 m (24′) CRC PAVEMENT

(WITH LUG SYSTEM)

(Sheet 2 of 2)

STANDARD 421201-05