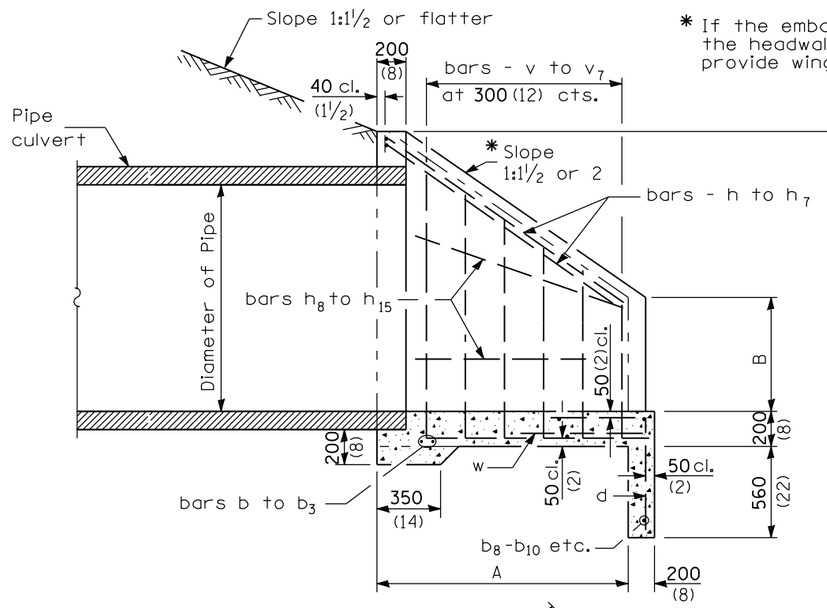

SECTION A-A

* If the embankment slope above the headwall is flatter than 1:2, provide wings for a 1:2 slope.

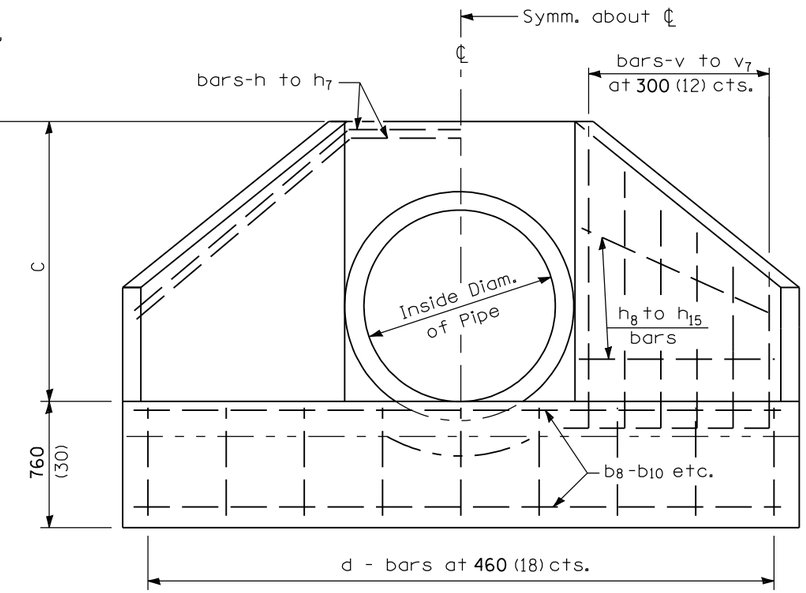

END ELEVATION

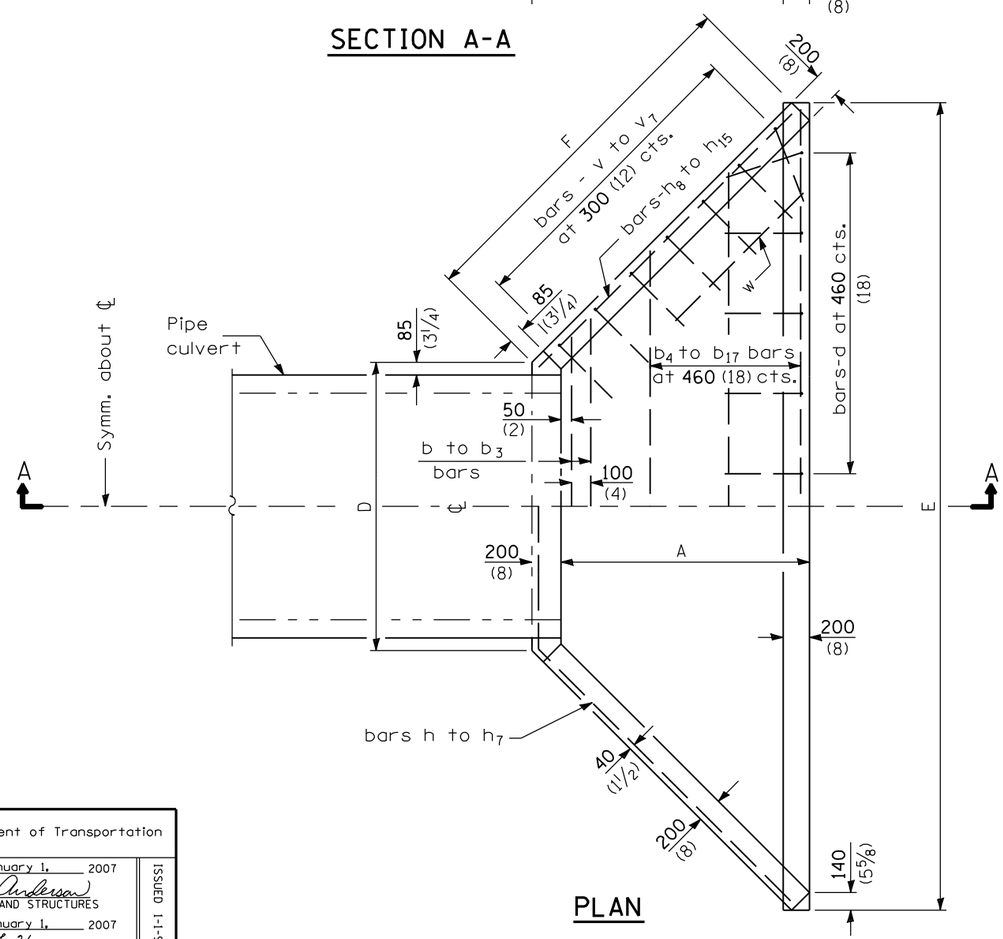

PLAN

GENERAL NOTES

All slope ratios are expressed as units of vertical displacement to units of horizontal displacement (V:H).

All dimensions are in millimeters (inches) unless otherwise shown.

Illinois Department of Transportation

APPROVED January 1, 2007
Ralph E. Anderson
ENGINEER OF BRIDGES AND STRUCTURES

APPROVED January 1, 2007
Michael L. Hine
ENGINEER OF DESIGN AND ENVIRONMENT

ISSUED 1-1-97

DATE	REVISIONS
1-1-07	Soft converted metric
	reinforcement bars.
1-1-97	Renum. Standard 1997-1.

REINFORCED CONCRETE END SECTIONS FOR PIPE CULVERT
1050 mm (42") THRU 1500 mm (60") DIA.
AT RIGHT ANGLES WITH ROADWAY
(Sheet 1 of 2)

STANDARD 542106-01

SIZES OF STRAIGHT BARS

BARS	SIZE	LENGTH	BARS	SIZE	LENGTH
b	No. 16 (No. 5)	1.9 m (6′-3″)	b_{13}	No. 13 (No. 4)	4.57 m (15′-0″)
b_1	No. 16 (No. 5)	2.06 m (6′-9″)	b_{14}	No. 13 (No. 4)	4.72 m (15′-6″)
b_2	No. 16 (No. 5)	2.21 m (7′-3″)	b_{15}	No. 13 (No. 4)	5.03 m (16′-6″)
b_3	No. 16 (No. 5)	2.44 m (8′-0″)	b_{16}	No. 13 (No. 4)	5.18 m (17′-0″)
b_4	No. 13 (No. 4)	2.51 m (8′-3″)	b_{17}	No. 13 (No. 4)	5.79 m (19′-0″)
b_5	No. 13 (No. 4)	2.74 m (9′-0″)	h_8	No. 13 (No. 4)	1.45 m (4′-9″)
b_6	No. 13 (No. 4)	3.05 m (10′-0″)	h_9	No. 13 (No. 4)	1.9 m (6′-3″)
b_7	No. 13 (No. 4)	3.2 m (10′-6″)	h_{10}	No. 13 (No. 4)	1.6 m (5′-3″)
b_8	No. 16 (No. 5)	3.43 m (11′-3″)	h_{11}	No. 13 (No. 4)	2.2 m (7′-3″)
b_9	No. 16 (No. 5)	3.66 m (12′-0″)	h_{12}	No. 13 (No. 4)	1.83 m (6′-0″)
b_{10}	No. 13 (No. 4)	3.96 m (13′-0″)	h_{13}	No. 13 (No. 4)	2.44 m (8′-0″)
b_{11}	No. 13 (No. 4)	4.11 m (13′-6″)	h_{14}	No. 13 (No. 4)	1.98 m (6′-6″)
b_{12}	No. 13 (No. 4)	4.34 m (14′-3″)	h_{15}	No. 13 (No. 4)	2.67 m (8′-9″)
			w	No. 13 (No. 4)	1.22 m (4′-0″)

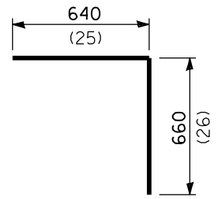

BAR d

BARS IN ONE END SECTION

1050 Pipe (42)				1200 Pipe (48)				1350 Pipe (54)				1500 Pipe (60)			
D1.05 -1½ (D42-1½)		D1.05 -2 (D42-2)		D1.2 -1½ (D48-1½)		D1.2 -2 (D48-2)		D1.35 -1½ (D54-1½)		D1.35 -2 (D54-2)		D1.5 -1½ (D60-1½)		D1.5 -2 (D60-2)	
BARS	No.	BARS	No.	BARS	No.	BARS	No.	BARS	No.	BARS	No.	BARS	No.	BARS	No.
d	8	d	9	d	9	d	10	d	10	d	12	d	11	d	13
b	2	b	2	b_1	2	b_1	2	b_2	2	b_2	2	b_3	2	b_3	2
b_5	1	b_4	1	b_7	1	b_6	1	b_5	1	b_5	1	b_7	1	b_7	1
b_8	2	b_8	1	b_{10}	2	b_{10}	1	b_9	1	b_9	1	b_{11}	1	b_{11}	1
		b_{11}	2			b_{14}	2	b_{12}	2	b_{13}	1	b_{14}	2	b_{15}	1
										b_{16}	2			b_{17}	2
h	2	h_1	2	h_2	2	h_1	2	h_4	2	h_5	2	h_6	2	h_7	2
h_8	4	h_9	4	h_{10}	4	h_9	4	h_{12}	4	h_{13}	4	h_{14}	4	h_{15}	4
v_3	2	v_3	2	v_2	2	v_2	2	v_1	2	v_1	2	v	2	v	4
v_4	2	v_4	2	v_3	2	v_3	4	v_2	2	v_2	4	v_1	2	v_1	2
v_5	2	v_5	4	v_4	2	v_4	2	v_3	2	v_3	2	v_2	2	v_2	2
v_6	2	v_6	2	v_5	2	v_5	2	v_4	2	v_4	2	v_3	2	v_3	4
v_7	2	v_7	2	v_6	2	v_6	4	v_5	2	v_5	4	v_4	2	v_4	2
								v_6	2	v_6	2	v_5	4	v_5	4
w	2	w	2	w	2	w	2	w	2	w	2	w	2	w	2

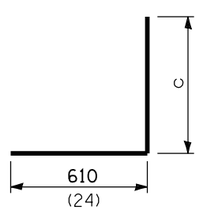

BARS v to v_7

DIMENSIONS OF BENT BARS

No. 16-bars v to v_7 (No. 5)			No. 16-bars h to h_7 (No. 5)			
BARS	c	TOTAL LENGTH	BARS	a	b	TOTAL LENGTH
v	1.83 m (6′-0″)	2.44 m (8′-0″)	h	1.42 m (4′-8″)	1.57 m (5′-2″)	4.56 m (15′-0″)
v_1	1.68 m (5′-6″)	2.29 m (7′-6″)	h_1	1.42 m (4′-8″)	2.03 m (6′-8″)	5.48 m (18′-0″)
v_2	1.52 m (5′-0″)	2.13 m (7′-0″)	h_2	1.6 m (5′-3″)	1.79 m (5′-10½″)	5.18 m (17′-0″)
v_3	1.37 m (4′-6″)	1.98 m (6′-6″)	h_3	1.6 m (5′-3″)	2.29 m (7′-6″)	6.18 m (20′-3″)
v_4	1.22 m (4′-0″)	1.83 m (6′-0″)	h_4	1.78 m (5′-10″)	2.01 m (6′-7″)	5.78 m (19′-0″)
v_5	1.07 m (3′-6″)	1.68 m (5′-6″)	h_5	1.78 m (5′-10″)	2.54 m (8′-4″)	6.86 m (22′-6″)
v_6	920 (36)	1.53 m (5′-0″)	h_6	1.96 m (6′-5″)	2.18 m (7′-2″)	6.32 m (20′-9″)
v_7	610 (24)	1.22 m (4′-6″)	h_7	1.96 m (6′-5″)	2.83 m (9′-3½″)	7.59 m (25′-0″)

DIMENSIONS AND QUANTITIES

DESIGN NO.	NOMINAL INSIDE DIAM. of PIPE	SLOPE of * FILL	DIMENSIONS A	B	C	D	E	F	Concrete 2 End Secs. m^3 (cu. yds.)	Reinf. Bars 2 End Secs. kg (lbs.)
D1.05 -1½ (D42-1½)	1050 (42)	1:1½	1.01 m (3′-4″)	660 (26)	1.33 m (4′-4½″)	1.48 m (4′-10″)	3.63 m (11′-10½″)	1.52 m (5′-0″)	3.7 (4.8)	150 (330)
D1.05 -2 (D42-2)	1050 (42)	1:2	1.35 m (4′-5″)	660 (26)	1.33 m (4′-4½″)	1.48 m (4′-10″)	4.29 m (14′-0½″)	1.99 m (6′-6¼″)	4.7 (6.2)	180 (400)
D1.2 -1½ (D48-1½)	1200 (48)	1:1½	1.14 m (3′-9″)	740 (29)	1.5 m (4′-11″)	1.65 m (5′-5″)	4.05 m (13′-3½″)	1.7 m (5′-7″)	4.4 (5.8)	163 (360)
D1.2 -2 (D48-2)	1200 (48)	1:2	1.52 m (5′-0″)	740 (29′)	1.5 m (4′-11″)	1.65 m (5′-5″)	4.82 m (15′-9½″)	2.24 m (7′-4¼″)	5.8 (7.6)	210 (460)
D1.35 -1½ (D54-1½)	1350 (54)	1:1½	1.27 m (4′-2″)	815 (32)	1.66 m (5′-5½″)	1.83 m (6′-0″)	4.49 m (14′-8½″)	1.88 m (6′-2″)	5.2 (6.8)	195 (430)
D1.35 -2 (D54-2)	1350 (54)	1:2	1.7 m (5′-7″)	815 (32)	1.66 m (5′-5½″)	1.83 m (6′-0″)	5.35 m (17′-6½″)	2.49 m (8′-2″)	7.0 (9.2)	250 (550)
D1.5 -1½ (D60-1½)	1500 (60)	1:1½	1.4 m (4′-7″)	890 (35)	1.83 m (6′-0″)	2.0 m (6′-7″)	4.91 m (16′-1½″)	2.06 m (6′-9″)	6.1 (8.0)	223 (490)
D1.5 -2 (D60-2)	1500 (60)	1:2	1.88 m (6′-2″)	890 (35)	1.83 m (6′-0″)	2.0 m (6′-7″)	5.88 m (19′-3½″)	2.74 m (9′-0″)	8.3 (10.8)	285 (630)

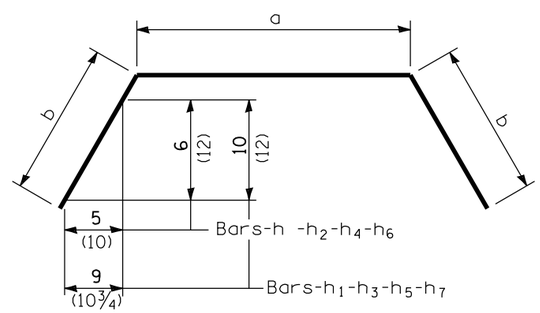

BARS - h to h_7

All dimensions are in millimeters (inches) unless otherwise shown.

Illinois Department of Transportation

APPROVED January 1, 2007
Ralph E. Anderson
ENGINEER OF BRIDGES AND STRUCTURES

APPROVED January 1, 2007
Michael L. Hine
ENGINEER OF DESIGN AND ENVIRONMENT

ISSUED 1-1-97

REINFORCED CONCRETE END SECTIONS
FOR PIPE CULVERT
1050 mm (42″) THRU 1500 mm (60″) DIA.
AT RIGHT ANGLES WITH ROADWAY
(Sheet 2 of 2)

STANDARD 542106–01