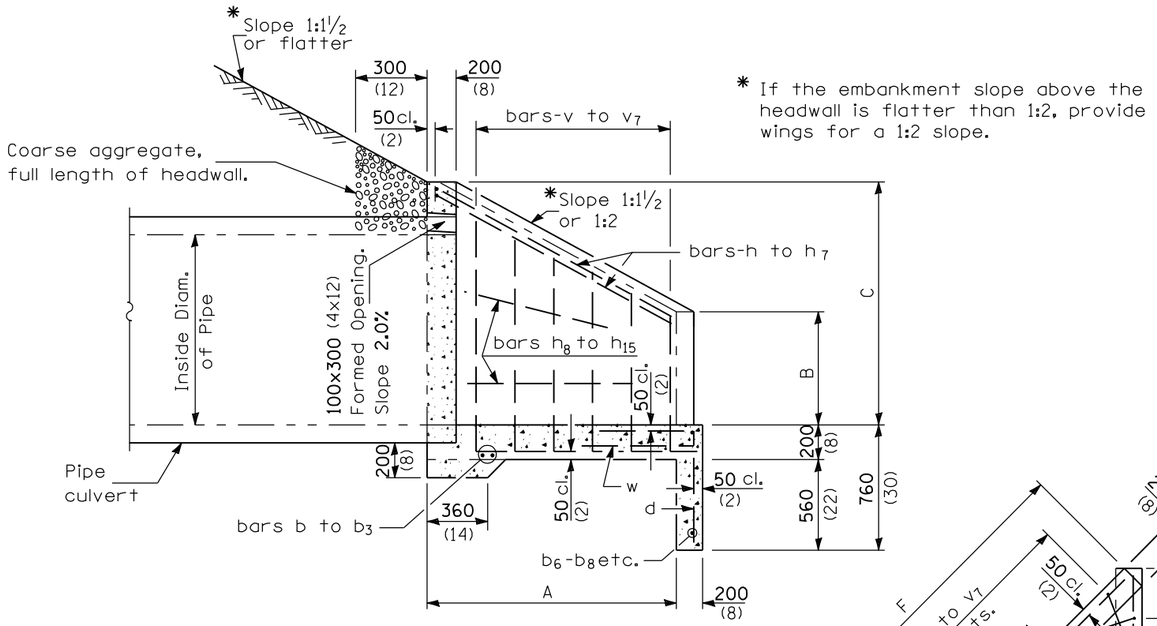

* If the embankment slope above the headwall is flatter than 1:2, provide wings for a 1:2 slope.

SECTION A-A

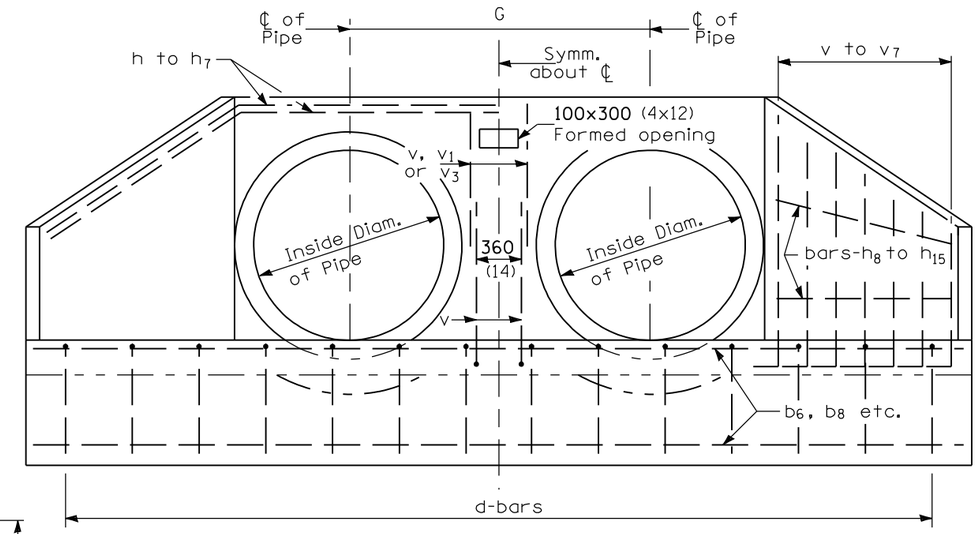

END ELEVATION

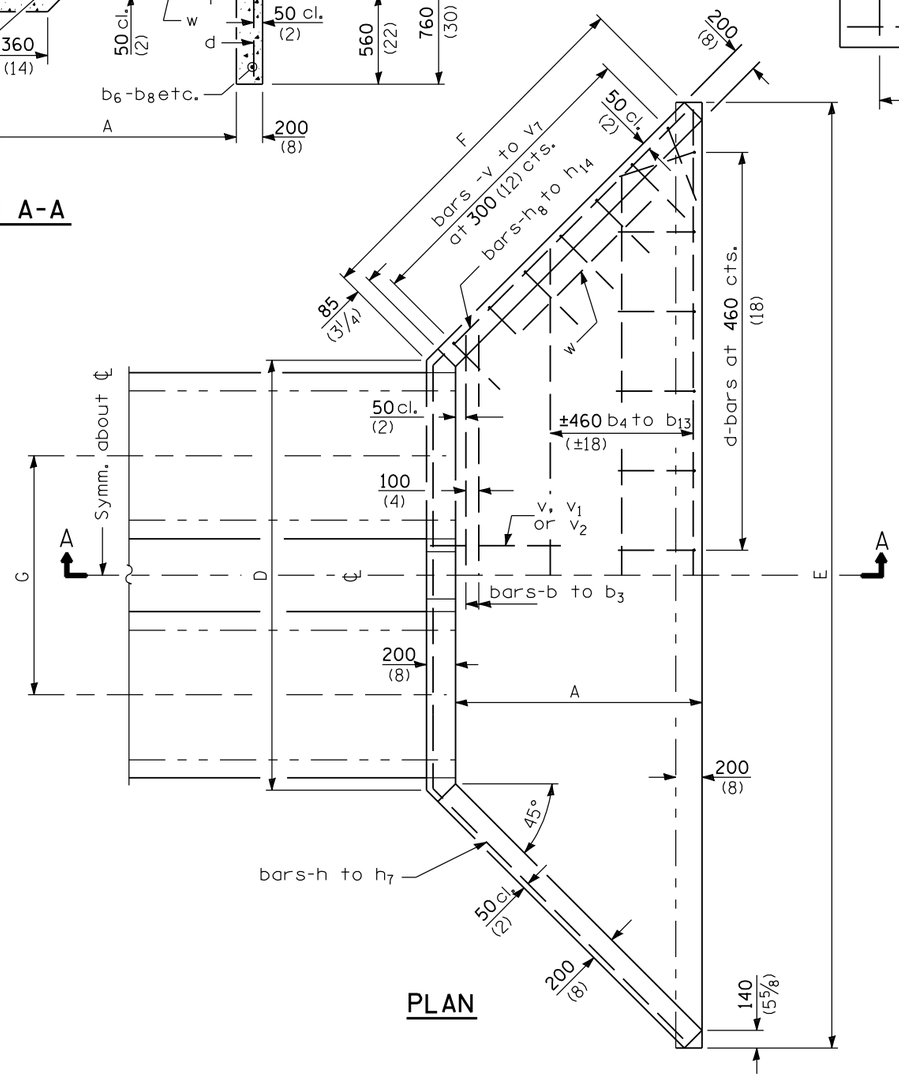

PLAN

GENERAL NOTES

All slope ratios are expressed as units of vertical displacement to units of horizontal displacement (V:H).

All dimensions are in millimeters (inches) unless otherwise shown.

Illinois Department of Transportation

APPROVED January 1, 2007
Ralph E. Anderson
ENGINEER OF BRIDGES AND STRUCTURES

APPROVED January 1, 2007
Michael L. Hine
ENGINEER OF DESIGN AND ENVIRONMENT

ISSUED 1-1-97

DATE	REVISIONS
1-1-07	Soft converted metric
	reinforcement bars.
1-1-97	Renum. Standard 2103-2.

REINFORCED CONCRETE END SECTIONS FOR MULTIPLE (2 & 3) PIPE CULVERTS 1050 mm (42") THRU 1500 mm (60") DIA. AT RIGHT ANGLES WITH ROADWAY

(Sheet 1 of 3)

STANDARD 542121-01

DIMENSIONS OF STRAIGHT BARS

BAR	SIZE	LENGTH (m) 2-PIPES	LENGTH (m) 3-PIPES	BAR	SIZE	LENGTH (m) 2-PIPES	LENGTH (m) 3-PIPES
b	No. 16 (No. 5)	3.58 (11′-9″)	5.33 (17′-6″)	h_8	No. 13 (No. 4)	1.45 (4′-9″)	1.45 (4′-9″)
b_1	No. 16 (No. 5)	3.96 (13′-0″)	5.87 (19′-3″)	h_9	No. 13 (No. 4)	1.6 (5′-3″)	1.6 (5′-3″)
b_2	No. 16 (No. 5)	4.27 (14′-0″)	6.32 (20′-9″)	h_{10}	No. 13 (No. 4)	1.83 (6′-0″)	1.83 (6′-0″)
b_3	No. 16 (No. 5)	4.65 (15′-3″)	6.94 (22′-9″)	h_{11}	No. 13 (No. 4)	1.98 (6′-6″)	1.98 (6′-6″)
b_4	No. 13 (No. 4)	4.42 (14′-6″)	6.25 (20′-6″)	h_{12}	No. 13 (No. 4)	2.21 (7′-3″)	2.21 (7′-3″)
b_5	No. 13 (No. 4)	4.95 (16′-3″)	7.01 (23′-0″)	h_{13}	No. 13 (No. 4)	2.44 (8′-0″)	2.44 (8′-0″)
b_6	No. 13 (No. 4)	5.26 (17′-3″)	7.32 (24′-0″)	h_{14}	No. 13 (No. 4)	2.67 (8′-9″)	2.67 (8′-9″)
b_7	No. 13 (No. 4)	5.49 (18′-0″)	7.47 (24′-6″)	w	No. 13 (No. 4)	1.22 (4′-0″)	1.22 (4′-0″)
b_8	No. 16 (No. 5)	5.79 (19′-0″)	7.7 (25′-3″)				
b_9	No. 16 (No. 5)	6.25 (20′-6″)	7.92 (26′-0″)				
b_{10}	No. 13 (No. 4)	6.48 (21′-3″)	8.23 (27′-0″)				
b_{11}	No. 13 (No. 4)	7.01 (23′-0″)	8.46 (27′-9″)				
b_{12}	No. 13 (No. 4)	7.32 (24′-0″)	9.3 (30′-6″)				
b_{13}	No. 13 (No. 4)	7.92 (26′-0″)	10.36 (34′-0″)				

DIMENSIONS AND QUANTITIES

DESIGN NO.	NOMINAL DIAM. of PIPE	SLOPE of FILL	DIMENSIONS FOR ALL MULTIPLES A	B	C	F	G	2 PIPES D	E	3 PIPES D	E	QUANTITIES 2 PIPES Concrete 2 End Secs. m^3 (cu. yds.)	Reinf. Bars 2 End Secs. kg (lbs.)	3 PIPES Concrete 2 End Secs. m^3 (cu. yds.)	Reinf. Bars 2 End Secs. kg (lbs.)
D1.05 m-1½ (D42-1½)	1050 (42)	1:1½	1.01 (3′-4″)	660 (26)	1.33 m (4′-4½″)	1.52 m (5′-0″)	1.75 m (5′-9″)	3.23 m (10′-7″)	5.38 m (17′-8″)	4.98 m (16′-4″)	7.13 m (23′-5″)	5.4 (7.1)	200 (440)	7.1 (9.3)	245 (540)
D1.05 m-2 (D42-2)	1050 (42)	1:2	1.35 m (4′-5″)	660 (26)	1.33 m (4′-4½″)	1.99 m (6′-6¼″)	1.75 m (5′-9″)	3.23 m (10′-7″)	6.04 m (19′-10″)	4.98 m (16′-4″)	7.8 m (25′-7″)	6.7 (8.8)	245 (540)	8.7 (11.4)	290 (640)
D1.2 m-1½ (D48-1½)	1200 (48)	1:1½	1.12 m (3′-9″)	740 (29)	1.5 m (4′-11″)	1.7 m (5′-7″)	1.93 m (6′-4″)	3.58 m (11′-9″)	5.98 m (19′-8″)	5.51 m (18′-1″)	7.91 m (26′-0″)	6.4 (8.4)	231 (510)	8.5 (11.1)	277 (610)
D1.2 m-2 (D48-2)	1200 (48)	1:2	1.52 m (5′-0″)	740 (29)	1.5 m (4′-11″)	2.24 m (7′-4¼″)	1.93 m (6′-4″)	3.58 m (11′-9″)	6.75 m (22′-2″)	5.51 m (18′-1″)	8.68 m (28′-6″)	8.2 (10.7)	286 (630)	10.5 (13.7)	336 (740)
D1.35-1½ (D54-1½)	1350 (54)	1:1½	1.27 m (4′-2″)	810 (32)	1.66 m (5′-5½″)	1.88 m (6′-2″)	2.11 m (6′-11″)	3.94 m (12′-11″)	6.6 m (21′-8″)	6.05 m (19′-10″)	8.71 m (28′-7″)	7.6 (10.0)	263 (580)	10.0 (13.1)	318 (700)
D1.35 m-2 (D54-2)	1350 (54)	1:2	1.7 m (5′-7″)	810 (32)	1.66 m (5′-5½″)	2.49 m (8′-2″)	2.11 m (6′-11″)	3.94 m (12′-11″)	7.46 m (24′-6″)	6.05 m (19′-10″)	9.57 m (31′-5″)	9.8 (12.8)	304 (670)	12.5 (16.3)	363 (800)
D1.5 m-1½ (D60-1½)	1500 (60)	1:1½	1.4 m (4′-7″)	890 (35)	1.83 m (6′-0″)	2.06 m (6′-9″)	2.29 m (7′-6″)	4.29 m (14′-1″)	7.2 m (23′-8″)	6.58 m (21′-7″)	9.49 m (31′-2″)	8.9 (11.7)	295 (650)	11.7 (15.3)	358 (790)
D1.5 m-2 (D60-2)	1500 (60)	1:2	1.88 m (6′-2″)	890 (35)	1.83 m (6′-0″)	2.74 m (9′-0″)	2.29 m (7′-6″)	4.29 m (14′-1″)	8.16 m (26′-10″)	6.58 m (21′-7″)	10.45 m (34′-4″)	11.5 (15.0)	354 (780)	14.7 (19.2)	422 (930)

DIMENSIONS OF BENT BARS

No. 16-bars v to v_7 (No. 5) BARS	c	TOTAL LENGTH	No. 16-bars h to h_7 (No. 5) BARS	2-PIPES a	2-PIPES b	2-PIPES TOTAL LENGTH	3-PIPES a	3-PIPES b	3-PIPES TOTAL LENGTH
v	1.83 m (6′-0″)	2.44 m (8′-0″)	h	3.18 m (10′-5″)	1.57 m (5′-2″)	6.32 m (20′-9″)	4.93 m (16′-2″)	1.57 m (5′-2″)	8.07 m (26′-6″)
v_1	1.68 m (5′-6″)	2.29 m (7′-6″)	h_1	3.18 m (10′-5″)	2.03 m (6′-8″)	7.24 m (23′-9″)	4.93 m (16′-2″)	2.03 m (6′-8″)	8.99 m (29′-6″)
v_2	1.52 m (5′-0″)	2.13 m (7′-0″)	h_2	3.53 m (11′-7″)	1.78 m (5′-10″)	7.09 m (23′-3″)	5.46 m (17′-11″)	1.80 m (5′-11″)	9.06 m (29′-9″)
v_3	1.37 m (4′-6″)	1.98 m (6′-6″)	h_3	3.53 m (11′-7″)	2.31 m (7′-7″)	8.15 m (26′-9″)	5.46 m (17′-11″)	2.3 m (7′-6½″)	10.06 m (33′-0″)
v_4	1.22 m (4′-0″)	1.83 m (6′-0″)	h_4	3.87 m (12′-9″)	1.98 m (6′-6″)	7.83 m (25′-9″)	6.0 m (19′-8″)	2.0 m (6′-6½″)	10.0 m (32′-9″)
v_5	1.07 m (3′-6″)	1.68 m (5′-6″)	h_5	3.87 m (12′-9″)	2.51 m (8′-3″)	8.89 m (29′-0″)	6.0 m (19′-8″)	2.53 m (8′-3½″)	11.06 m (36′-3″)
v_6	910 (36)	1.52 m (5′-0″)	h_6	4.24 m (13′-11″)	2.18 m (7′-2″)	8.60 m (28′-3″)	6.53 m (21′-5″)	2.18 m (7′-2″)	10.89 m (35′-9″)
v_7	760 (30)	1.37 m (4′-6″)	h_7	4.24 m (13′-11″)	2.79 m (9′-2″)	9.82 m (32′-3″)	6.53 m (21′-5″)	2.83 m (9′-3½″)	12.19 m (40′-0″)

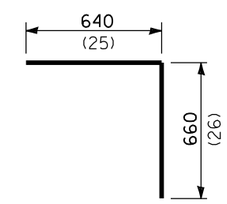

No. 13 (No. 4)-BAR d

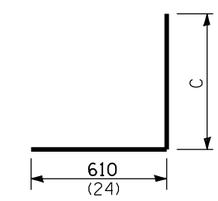

No. 13 (No. 4) BARS v to v_7

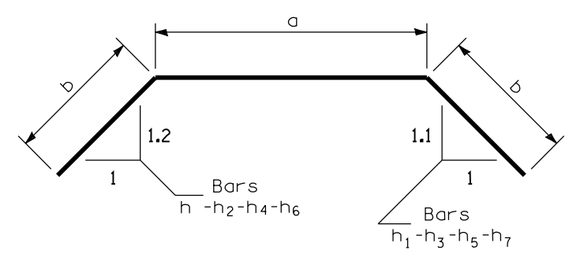

No. 13 (No. 4) BARS - h to h_7

Bend in field
One Required in each headwall

All dimensions are in millimeters (inches) unless otherwise shown.

Illinois Department of Transportation

APPROVED January 1, 2007
Ralph E. Anderson
ENGINEER OF BRIDGES AND STRUCTURES

APPROVED January 1, 2007
Michael L. Hine
ENGINEER OF DESIGN AND ENVIRONMENT

ISSUED 1-1-97

REINFORCED CONCRETE END SECTIONS FOR MULTIPLE (2 & 3) PIPE CULVERTS 1050 mm (42″) THRU 1500 mm (60″) DIA. AT RIGHT ANGLES WITH ROADWAY
(Sheet 2 of 3)

STANDARD 542121-01

BARS IN ONE END SECTION - 2 PIPES

1050 Pipe (42)				1200 Pipe (48)				1350 Pipe (54)				1500 Pipe (60)			
D1.05-1½ (D42-1½)		D1.05-2 (D42-2)		D1.2-1½ (D48-1½)		D1.2-2 (D48-2)		D1.35-1½ (D54-1½)		D1.35-2 (D54-2)		D1.5-1½ (D60-1½)		D1.5-2 (D60-2)	
BARS	No.	BARS	No.	BARS	No.	BARS	No.	BARS	No.	BARS	No.	BARS	No.	BARS	No.
d	12	d	13	d	13	d	15	d	14	d	16	d	16	d	18
b	2	b	2	b_1	2	b_1	2	b_2	2	b_2	2	b_3	2	b_3	2
b_4	1	b_4	1	b_5	1	b_5	1	b_6	1	b_6	1	b_7	1	b_7	1
b_6	2	b_6	1	b_8	2	b_8	1	b_8	1	b_9	1	b_9	1	b_9	1
		b_8	2			b_{10}	2	b_{10}	2	b_{12}	2	b_{11}	2	b_{12}	1
														b_{13}	2
h	2	h_1	2	h_2	2	h_3	2	h_4	2	h_5	2	h_6	2	h_7	2
h_8	4	h_{10}	4	h_9	4	h_{12}	4	h_{10}	4	h_{13}	4	h_{11}	4	h_{14}	4
v_7	6	v_7	8	v_7	4	v_7	4	v_6	4	v_6	6	v_5	6	v_5	8
v_4	4	v_4	6	v_5	4	v_5	8	v_4	4	v_4	6	v_3	4	v_3	6
v_3	2	v_3	2	v_3	4	v_2	4	v_1	4	v_1	4	v	6	v	6
				v_1	2	v_1	2	v	2	v	2				
w	2	w	2	w	2	w	2	w	2	w	2	w	2	w	2

BARS IN ONE END SECTION - 3 PIPES

1050 Pipe (42)				1200 Pipe (48)				1350 Pipe (54)				1500 Pipe (60)			
D1.05-1½ (D42-1½)		D1.05-2 (D42-2)		D1.2-1½ (D48-1½)		D1.2-2 (D48-2)		D1.35-1½ (D54-1½)		D1.35-2 (D54-2)		D1.5-1½ (D60-1½)		D1.5-2 (D60-2)	
BARS	No.	BARS	No.	BARS	No.	BARS	No.	BARS	No.	BARS	No.	BARS	No.	BARS	No.
d	15	d	17	d	17	d	19	d	19	d	21	d	21	d	23
b	2	b	2	b_1	2	b_1	2	b_2	2	b_2	2	b_3	2	b_3	2
b_4	1	b_4	1	b_5	1	b_5	1	b_6	1	b_7	1	b_8	1	b_8	1
b_5	2	b_5	1	b_8	2	b_8	1	b_9	1	b_{11}	1	b_{11}	1	b_{10}	1
		b_8	2			b_{11}	2	b_{11}	2	b_{12}	2	b_{12}	2	b_{12}	1
														b_{13}	2
h	2	h_1	2	h_2	2	h_3	2	h_4	2	h_5	2	h_6	2	h_7	2
h_8	4	h_{10}	4	h_9	4	h_{12}	4	h_{10}	4	h_{13}	4	h_{11}	4	h_{14}	4
v_7	6	v_7	8	v_7	4	v_7	4	v_6	4	v_6	6	v_5	6	v_5	8
v_4	4	v_4	6	v_5	4	v_5	8	v_4	4	v_4	6	v_3	4	v_3	6
v_3	2	v_3	2	v_3	4	v_2	4	v_1	4	v_1	4	v	6	v	6
				v_1	2	v_1	2	v	2	v	2				
w	2	w	2	w	2	w	2	w	2	w	2	w	2	w	2

All dimensions are in millimeters (inches) unless otherwise shown.

Illinois Department of Transportation

APPROVED January 1, 2007
Ralph E. Anderson
ENGINEER OF BRIDGES AND STRUCTURES

APPROVED January 1, 2007
Michael L. Hine
ENGINEER OF DESIGN AND ENVIRONMENT

ISSUED 1-1-97

REINFORCED CONCRETE END SECTIONS
FOR MULTIPLE (2 & 3) PIPE CULVERTS
1050 mm (42") THRU 1500 mm (60") DIA.
AT RIGHT ANGLES WITH ROADWAY
(Sheet 3 of 3)

STANDARD 542121-01