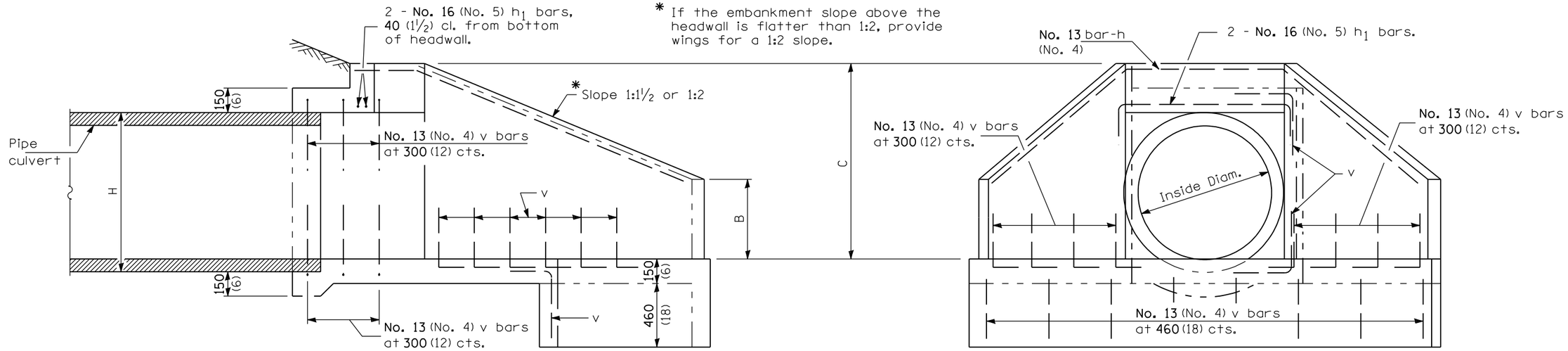

SECTION A-A

END VIEW

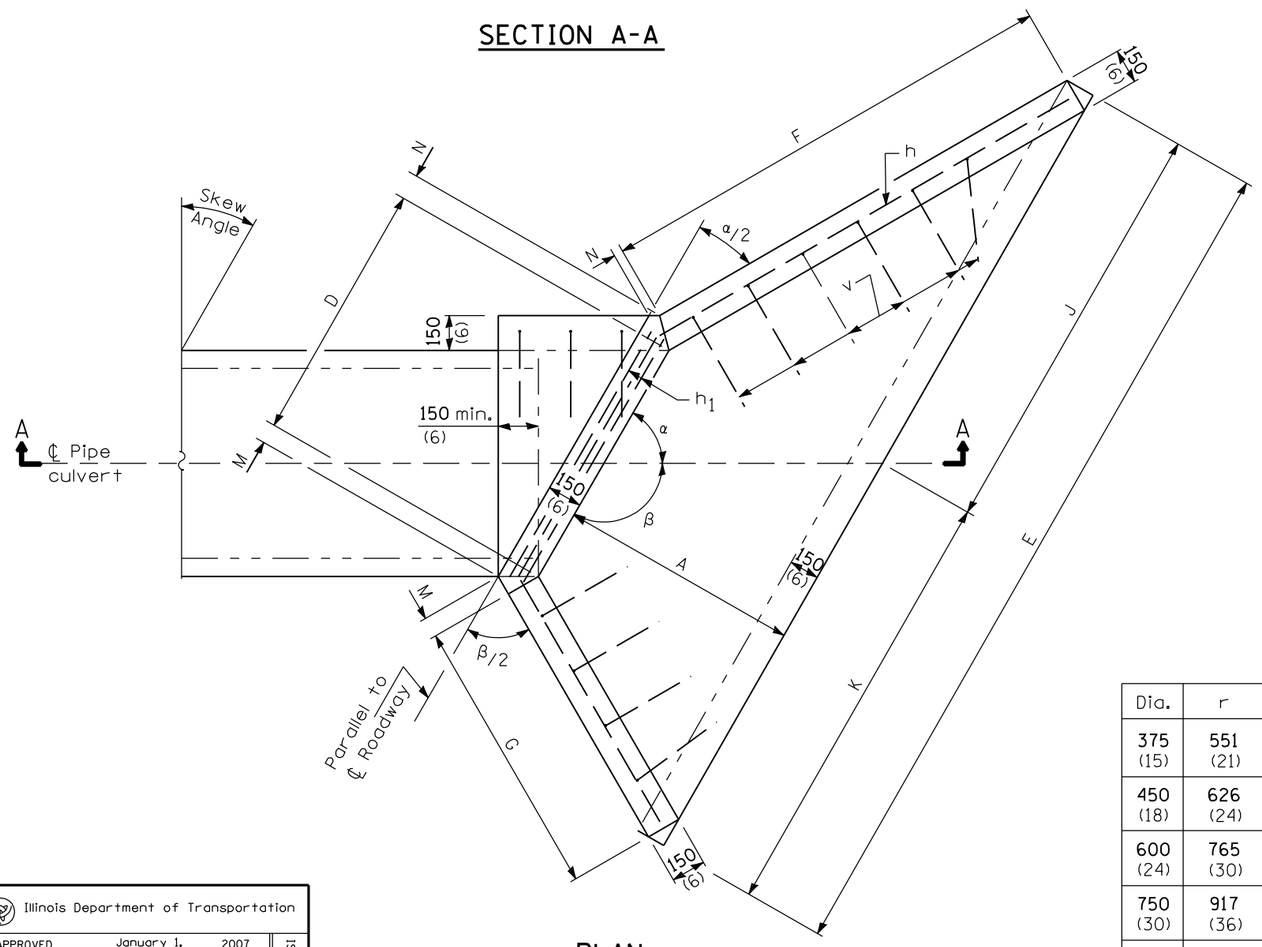

PLAN

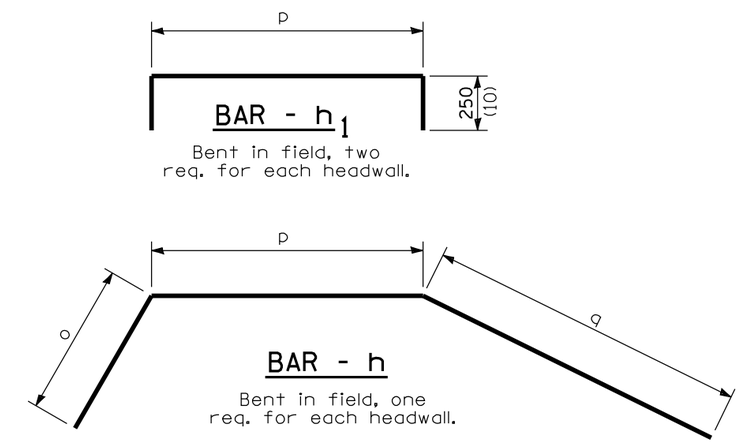

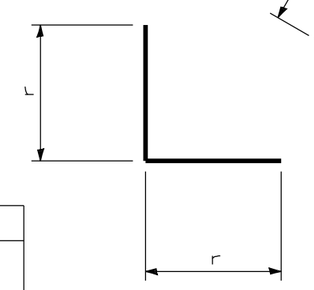

BAR - v

Dia.	r
375 (15)	551 (21)
450 (18)	626 (24)
600 (24)	765 (30)
750 (30)	917 (36)
900 (36)	1.08 m (3'-6")

GENERAL NOTES

Build tops of headwalls parallel to grade line.

All slope ratios are expressed as units of vertical displacement to units of horizontal displacement (V:H).

All dimensions are in millimeters (inches) unless otherwise shown.

Illinois Department of Transportation

APPROVED January 1, 2007
Ralph E. Anderson
ENGINEER OF BRIDGES AND STRUCTURES

APPROVED January 1, 2007
Michael L. Hine
ENGINEER OF DESIGN AND ENVIRONMENT

ISSUED 1-1-97

DATE	REVISIONS
1-1-07	Soft converted metric
	reinforcement bars.
	Added h_1 bars.
1-1-97	Renum. Standard 2051-2.
	Deleted DN symbol.

REINFORCED CONCRETE END SECTIONS FOR PIPE CULVERTS 375 mm (15") THRU 900 mm (36") DIA. SKEWED WITH ROADWAY

(Sheet 1 of 5)

STANDARD 542201-01

WINGS FOR 1:1½ SLOPE

Skew Angle	Design No.	Nominal Dia. For Pipe	DIMENSIONS FOR CONCRETE A	B	C	D	E	F	G	H	J	K	M	N	α	Concrete 2 End Secs. m3 (yd3)	Reinf. Bars - 2 End Sections h - bars o	p	q	Lgth.	h1 - bars p	Lgth.	v-bars No.	Bars for 2 End Sections kg (lbs)
5°	DS 375-1½ (DS 15-1½)	375 (15)	720 (28)	260 (10)	740 (29)	485 (19)	2.15 m (6′-11¾″)	1.07 m (3′-5½″)	980 (38)	483 (19)	1.07 m (3′-5¾″)	1.08 m (3′-6″)	70 (2¾)	60 (2¼)	85°	1.1 (1.4)	1.01 m (3′-6″)	551 (21)	1.09 m (3′-9″)	2.65 m (9′-0″)	551 (21)	1.04 m (3′-5″)	28	41 (90)
	DS 450-1½ (DS 18-1½)	450 (18)	720 (28)	330 (13)	810 (32)	561 (22)	2.22 m (7′-2¾″)	1.07 m (3′-5½″)	980 (38)	559 (22)	1.11 m (3′-7¼″)	1.11 m (3′-7½″)	70 (2¾)	60 (2¼)	85°	1.2 (1.6)	1.03 m (3′-6″)	626 (24)	1.12 m (3′-9″)	2.78 m (9′-3″)	626 (24)	1.12 m (3′-8″)	28	45 (100)
	DS 600-1½ (DS 24-1½)	600 (24)	870 (34)	410 (16)	990 (39)	765 (30)	2.73 m (8′-10¾″)	1.29 m (4′-2¼″)	1.18 m (3′-10″)	762 (30)	1.36 m (4′-5¼″)	1.37 m (4′-5½″)	70 (2¾)	60 (2¼)	85°	1.7 (2.2)	1.23 m (4′-3″)	832 (32)	1.33 m (4′-7″)	3.39 m (11′-6″)	832 (32)	1.32 m (4′-4″)	32	63 (140)
	DS 750-1½ (DS 30-1½)	750 (30)	990 (39)	480 (19)	1140 (3′-9″)	917 (36)	3.12 m (10′-3″)	1.47 m (4′-9¾″)	1.35 m (4′-5″)	914 (36)	1.56 m (5′-1¼″)	1.56 m (5′-1¾″)	70 (2¾)	60 (2¼)	85°	2.1 (2.7)	1.39 m (4′-10″)	983 (39)	1.51 m (5′-2″)	3.88 m (13′-3″)	983 (39)	1.50 m (4′-11″)	36	81 (180)
	DS 900-1½ (DS 36-1½)	900 (36)	1140 (3′-9″)	560 (22)	1320 (4′-4″)	1123 (3′-8¼″)	3.63 m (11′-11″)	1.69 m (5′-6½″)	1.55 m (5′-1″)	1.119 m (3′-8″)	1.81 m (5′-11¼″)	1.82 m (5′-11¾″)	70 (2¾)	60 (2¼)	85°	2.5 (3.3)	1.6 m (5′-7″)	1.19 m (3′-11″)	1.73 m (6′-0″)	4.52 m (15′-6″)	1.19 m (3′-11″)	1.70 m (5′-7″)	42	108 (240)
10°	DS 375-1½ (DS 15-1½)	375 (15)	720 (28)	260 (10)	740 (29)	490 (19¼)	2.17 m (7′-0½″)	1.12 m (3′-7½″)	940 (36½)	483 (19)	1.08 m (3′-6″)	1.09 m (3′-6½″)	70 (2¾)	60 (2¼)	80°	1.2 (1.5)	972 (3′-4″)	557 (22)	1.14 m (3′-10″)	2.67 m (9′-0″)	557 (22)	1.07 m (3′-6″)	28	41 (90)
	DS 450-1½ (DS 18-1½)	450 (18)	720 (28)	330 (13)	810 (32)	568 (22¼)	2.24 m (7′-3¾″)	1.12 m (3′-7½″)	940 (36½)	559 (22)	1.11 m (3′-7½″)	1.13 m (3′-8¼″)	70 (2¾)	60 (2¼)	80°	1.2 (1.6)	990 (3′-4″)	633 (25)	1.17 m (3′-10″)	2.8 m (9′-3″)	633 (25)	1.14 m (3′-9″)	28	45 (100)
	DS 600-1½ (DS 24-1½)	600 (24)	870 (34)	410 (16)	990 (39)	774 (30½)	2.76 m (9′-0″)	1.36 m (4′-5″)	1.14 m (3′-8½″)	762 (30)	1.37 m (4′-5¾″)	1.39 m (4′-6¼″)	70 (2¾)	60 (2¼)	80°	1.7 (2.2)	1.18 m (4′-1″)	841 (33)	1.4 m (4′-8″)	3.42 m (11′-6″)	841 (33)	1.35 m (4′-5″)	34	68 (150)
	DS 750-1½ (DS 30-1½)	750 (30)	990 (39)	480 (19)	1140 (3′-9″)	928 (36½)	3.15 m (10′-4¼″)	1.54 m (5′-0¾″)	1.3 m (4′-3″)	914 (36)	1.57 m (5′-1¾″)	1.58 m (5′-2½″)	70 (2¾)	60 (2¼)	80°	2.1 (2.8)	1.34 m (4′-9″)	993 (39)	1.58 m (5′-6″)	3.92 m (13′-6″)	993 (39)	1.50 m (4′-11″)	36	81 (180)
	DS 900-1½ (DS 36-1½)	900 (36)	1140 (3′-9″)	560 (22)	1320 (4′-4″)	1136 (3′-8¾″)	3.67 m (12′-0½″)	1.78 m (5′-10″)	1.49 m (4′-10¾″)	1.119 m (3′-8″)	1.83 m (6′-0″)	1.84 m (6′-0½″)	70 (2¾)	60 (2¼)	80°	2.7 (3.5)	1.54 m (5′-6″)	1.2 m (3′-11″)	1.82 m (6′-4″)	4.56 m (15′-9″)	1.2 m (3′-11″)	1.70 m (5′-7″)	42	108 (240)
15°	DS 375-1½ (DS 15-1½)	375 (15)	720 (28)	260 (10)	740 (29)	500 (19¾)	2.2 m (7′-2″)	1.19 m (3′-10″)	910 (35¼)	483 (19)	1.09 m (3′-6½″)	1.11 m (3′-7½″)	80 (3)	50 (2)	75°	1.2 (1.5)	942 (3′-4″)	567 (22)	1.2 m (4′-1″)	2.71 m (9′-3″)	567 (22)	1.07 m (3′-6″)	28	41 (90)
	DS 450-1½ (DS 18-1½)	450 (18)	720 (28)	330 (13)	810 (32)	579 (22¾)	2.28 m (7′-5¼″)	1.19 m (3′-10″)	910 (35¼)	559 (22)	1.13 m (3′-8″)	1.15 m (3′-9¼″)	80 (3)	50 (2)	75°	1.3 (1.7)	965 (3′-4″)	644 (25)	1.23 m (4′-1″)	2.84 m (9′-6″)	644 (25)	1.14 m (3′-9″)	28	45 (100)
	DS 600-1½ (DS 24-1½)	600 (24)	870 (34)	410 (16)	990 (39)	789 (31)	2.8 m (9′-2″)	1.43 m (4′-7¾″)	1.1 m (3′-6¾″)	762 (30)	1.39 m (4′-6½″)	1.41 m (4′-7½″)	80 (3)	50 (2)	75°	1.8 (2.3)	1.15 m (4′-0″)	857 (34)	1.47 m (4′-11″)	3.47 m (11′-9″)	857 (34)	1.37 m (4′-6″)	34	68 (150)
	DS 750-1½ (DS 30-1½)	750 (30)	990 (39)	480 (19)	1140 (3′-9″)	946 (37¼)	3.21 m (10′-6½″)	1.63 m (5′-4″)	1.25 m (4′-1¼″)	914 (36)	1.59 m (5′-2¾″)	1.62 m (5′-3¾″)	80 (3)	50 (2)	75°	2.2 (2.9)	1.3 m (4′-8″)	1.01 m (3′-4″)	1.67 m (5′-9″)	3.98 m (13′-9″)	1.01 m (3′-4″)	1.52 m (5′-0″)	40	90 (200)
	DS 900-1½ (DS 36-1½)	900 (36)	1140 (3′-9″)	560 (22)	1320 (4′-4″)	1158 (3′-9½″)	3.73 m (12′-3¼″)	1.87 m (6′-2″)	1.44 m (4′-8¾″)	1.119 m (3′-8″)	1.85 m (6′-1″)	1.88 m (6′-2¼″)	80 (3)	50 (2)	75°	2.9 (3.8)	1.49 m (5′-3″)	1.22 m (4′-0″)	1.92 m (6′-6″)	4.63 m (15′-9″)	1.22 m (4′-0″)	1.73 m (5′-8″)	46	117 (260)
20°	DS 375-1½ (DS 15-1½)	375 (15)	720 (28)	260 (10)	740 (29)	514 (20¼)	2.26 m (7′-4″)	1.26 m (4′-0¾″)	880 (34¼)	483 (19)	1.11 m (3′-7¼″)	1.15 m (3′-8¾″)	80 (3)	50 (2)	70°	1.2 (1.6)	916 (39)	581 (23)	1.27 m (4′-4″)	2.77 m (9′-6″)	581 (23)	1.09 m (3′-7″)	28	41 (90)
	DS 450-1½ (DS 18-1½)	450 (18)	720 (28)	330 (13)	810 (32)	595 (23½)	2.34 m (7′-7½″)	1.26 m (4′-0¾″)	880 (34¼)	559 (22)	1.15 m (3′-9″)	1.19 m (3′-10½″)	80 (3)	50 (2)	70°	1.3 (1.7)	938 (39)	661 (26)	1.31 m (4′-4″)	2.9 m (9′-9″)	661 (26)	1.17 m 3′-10″)	28	45 (100)
	DS 600-1½ (DS 24-1½)	600 (24)	870 (34)	410 (16)	990 (39)	811 (32)	2.87 m (9′-4½″)	1.52 m (4′-11¼″)	1.07 m (3′-5½″)	762 (30)	1.42 m (4′-7½″)	1.45 m (4′-9″)	80 (3)	50 (2)	70°	1.8 (2.4)	1.11 m (3′-11″)	879 (35)	1.56 m (5′-2″)	3.55 m (12′-0″)	879 (35)	1.40 m (4′-7″)	38	72 (160)
	DS 750-1½ (DS 30-1½)	750 (30)	990 (39)	480 (19)	1140 (3′-9″)	973 (38¼)	3.29 m (10′-9¾″)	1.73 m (5′-8″)	1.21 m (3′-11½″)	914 (36)	1.63 m (5′-4¼″)	1.66 m (5′-5½″)	80 (3)	50 (2)	70°	2.4 (3.1)	1.26 m (4′-5″)	1.04 m (3′-5″)	1.77 m (5′-11″)	4.07 m (13′-9″)	1.04 m (3′-5″)	1.55 m (5′-1″)	42	95 (210)
	DS 900-1½ (DS 36-1½)	900 (36)	1140 (3′-9″)	560 (22)	1320 (4′-4″)	1191 (3′-10¾″)	3.86 m (12′-7″)	1.99 m (6′-6½″)	1.41 m (4′-7″)	1.119 m (3′-8″)	1.9 m (6′-2¾″)	1.93 m (6′-4¼″)	80 (3)	50 (2)	70°	3.1 (4.0)	1.45 m (5′-3″)	1.26 m (4′-1″)	2.03 m (6′-11″)	4.73 m (16′-3″)	1.26 m (4′-1″)	1.75 m (5′-9″)	50	126 (280)
25°	DS 375-1½ (DS 15-1½)	375 (15)	720 (28)	260 (10)	740 (29)	533 (21)	2.33 m (7′-7″)	1.34 m (4′-4″)	860 (33¼)	483 (19)	1.14 m (3′-8½″)	1.19 m (3′-10½″)	90 (3¼)	50 (1¾)	65°	1.2 (1.6)	893 (39)	600 (23)	1.36 m (4′-7″)	2.85 m (9′-9″)	600 (23)	1.09 m (3′-7″)	28	41 (90)
	DS 450-1½ (DS 18-1½)	450 (18)	720 (28)	330 (13)	810 (32)	617 (24¼)	2.42 m (7′-10¼″)	1.34 m (4′-4″)	860 (33¼)	559 (22)	1.19 m (3′-10¼″)	1.23 m (4′-0″)	90 (3¼)	50 (1¾)	65°	1.4 (1.8)	914 (38)	683 (27)	1.39 m (4′-7″)	2.99 m (10′-0″)	683 (27)	1.19 m (3′-11″)	32	54 (120)
	DS 600-1½ (DS 24-1½)	600 (24)	870 (34)	410 (16)	990 (39)	841 (33)	2.97 m (9′-8½″)	1.62 m (5′-3¼″)	1.04 m (3′-4¼″)	762 (30)	1.46 m (4′-9¼″)	1.51 m (4′-11¼″)	90 (3¼)	50 (1¾)	65°	1.9 (2.5)	1.09 m (3′-10″)	909 (35)	1.66 m (5′-6″)	3.65 m (12′-3″)	909 (35)	1.40 m (4′-7″)	38	72 (160)
	DS 750-1½ (DS 30-1½)	750 (30)	990 (39)	480 (19)	1140 (3′-9″)	1008 (3′-3¾″)	3.4 m (11′-2″)	1.83 m (6′-0½″)	1.18 m (3′-10¼″)	914 (36)	1.68 m (5′-6″)	1.72 m (5′-8″)	90 (3¼)	50 (1¾)	65°	2.5 (3.3)	1.23 m (4′-5″)	1.08 m (3′-6″)	1.88 m (6′-4″)	4.18 m (14′-3″)	1.08 m (3′-6″)	1.58 m (5′-2″)	44	99 (220)
	DS 900-1½ (DS 36-1½)	900 (36)	1140 (3′-9″)	560 (22)	1320 (4′-4″)	1235 (4′-0½″)	3.96 m (13′-0¼″)	2.12 m (6′-11¾″)	1.36 m (4′-5¼″)	1.119 m (3′-8″)	1.96 m (6′-5¼″)	2 m (6′-7″)	90 (3¼)	50 (1¾)	65°	3.3 (4.3)	1.41 m (5′-0″)	1.3 m (4′-3″)	2.16 m (7′-3″)	4.87 m (16′-6″)	1.3 m (4′-3″)	1.80 m (5′-11″)	50	126 (280)
30°	DS 375-1½ (DS 15-1½)	375 (15)	720 (28)	260 (10)	740 (29)	558 (22)	2.43 m (7′-10¾″)	1.44 m (4′-8″)	830 (32¼)	483 (19)	1.19 m (3′-10¼″)	1.24 m (4′-0½″)	90 (3½)	40 (1½)	60°	1.3 (1.7)	873 (37)	626 (24)	1.46 m (4′-11″)	2.95 m (10′-0″)	626 (24)	1.12 m (3′-8″)	36	50 (110)
	DS 450-1½ (DS 18-1½)	450 (18)	720 (28)	330 (13)	810 (32)	645 (25½)	2.52 m (8′-2¼″)	1.44 m (4′-8″)	830 (32¼)	559 (22)	1.23 m (4′-0″)	1.29 m (4′-2¼″)	90 (3½)	40 (1½)	60°	1.5 (1.9)	893 (38)	712 (28)	1.49 m (5′-0″)	3.1 m (10′-6″)	712 (28)	1.22 m (4′-0″)	36	59 (130)
	DS 600-1½ (DS 24-1½)	600 (24)	870 (34)	410 (16)	990 (39)	880 (34¾)	3.1 m (10′-1¼″)	1.74 m (5′-8″)	1.01 m (3′-3¼″)	762 (30)	1.52 m (4′-11½″)	1.58 m (5′-1¾″)	90 (3½)	40 (1½)	60°	2.1 (2.7)	1.06 m (3′-9″)	949 (37)	1.78 m (5′-11″)	3.79 m (12′-9″)	949 (37)	1.45 m (4′-9″)	40	77 (170)
	DS 750-1½ (DS 30-1½)	750 (30)	990 (39)	480 (19)	1140 (3′-9″)	1055 (3′-5½″)	3.55 m (11′-7¾″)	1.98 m (6′-6″)	1.15 m (3′-9″)	914 (36)	1.75 m (5′-8¾″)	1.8 m (5′-11″)	90 (3½)	40 (1½)	60°	2.7 (3.5)	1.2 m (4′-4″)	1.12 m (3′-8″)	2.02 m (6′-9″)	4.34 m (14′-9″)	1.12 m (3′-8″)	1.63 m (5′-4″)	46	104 (230)
	DS 900-1½ (DS 36-1½)	900 (36)	1140 (3′-9″)	560 (22)	1320 (4′-4″)	1292 (4′-2¾″)	4.13 m (13′-7″)	2.28 m (7′-6″)	1.32 m (4′-4″)	1.119 m (3′-8″)	2.04 m (6′-8½″)	2.09 m (6′-10½″)	90 (3½)	40 (1½)	60°	3.5 (4.6)	1.37 m (5′-0″)	1.36 m (4′-5″)	2.32 m (7′-10″)	5.05 m (17′-3″)	1.36 m (4′-5″)	1.86 m (6′-1″)	54	135 (300)

All dimensions are in millimeters (inches) unless otherwise shown.

All slope ratios are expressed as units of vertical displacement to units of horizontal displacement (V:H).

Illinois Department of Transportation

APPROVED January 1, 2007
Ralph E. Anderson
ENGINEER OF BRIDGES AND STRUCTURES

APPROVED January 1, 2007
Michael L. Hine
ENGINEER OF DESIGN AND ENVIRONMENT

ISSUED 1-1-97

REINFORCED CONCRETE END SECTIONS
FOR PIPE CULVERTS
375 mm (15″) THRU 900 mm (36″) DIA.
SKEWED WITH ROADWAY
(Sheet 2 of 5)

STANDARD 542201-01

WINGS FOR 1:1½ SLOPE

Skew Angle	Design No.	Nominal Dia. For Pipe	DIMENSIONS FOR CONCRETE A	B	C	D	E	F	G	H	J	K	M	N	α	Concrete 2 End Secs. m³ (yd³)	Reinf. Bars - 2 End Sections h - bars o	p	q	Lgth.	h₁ - bars p	Lgth.	v-bars No.	Bars for 2 End Sections kg (lbs)
35°	DS 375-1½ (DS 15-1½)	375 (15)	720 (28)	260 (10)	740 (29)	590 (23¼)	2.55 m (8′-3¾″)	1.56 m (5′-0¾″)	820 (31½)	483 (19)	1.24 m (4′-0½″)	1.31 m (4′-3″)	90 (3¾)	40 (1½)	55°	1.4 (1.8)	855 (37)	658 (26)	1.57 m (5′-3″)	3.09 m (10′-6″)	658 (26)	1.17 m (3′-10″)	36	50 (110)
	DS 450-1½ (DS 18-1½)	450 (18)	720 (28)	330 (13)	810 (32)	682 (27)	2.65 m (8′-7¼″)	1.56 m (5′-0¾″)	820 (31½)	559 (22)	1.29 m (4′-2¼″)	1.36 m (4′-5″)	90 (3¾)	40 (1½)	55°	1.5 (2.0)	876 (37)	750 (29)	1.61 m (5′-3″)	3.24 m (10′-9″)	750 (29)	1.25 m (4′-1″)	36	59 (130)
	DS 600-1½ (DS 24-1½)	600 (24)	870 (34)	410 (16)	990 (39)	930 (36½)	3.26 m (10′-7¾″)	1.88 m (6′-1¾″)	980 (38¼)	762 (30)	1.6 m (5′-2½″)	1.66 m (5′-5¼″)	90 (3¾)	40 (1½)	55°	2.2 (2.9)	1.04 m (3′-8″)	1.0 m (39)	1.92 m (6′-4″)	3.96 m (13′-3″)	1.0 m (39)	1.50 m (4′-11″)	40	77 (170)
	DS 750-1½ (DS 30-1½)	750 (30)	990 (39)	480 (19)	1140 (3′-9″)	1.116 m (3′-8″)	3.74 m (12′-3¼″)	2.15 m (7′-0½″)	1.12 m (3′-8″)	914 (36)	1.84 m (6′-0¼″)	1.9 m (6′-3″)	90 (3¾)	40 (1½)	55°	2.8 (3.7)	1.17 m (4′-2″)	1.18 m (3′-11″)	2.18 m (7′-2″)	4.54 m (15′-3″)	1.18 m (3′-11″)	1.70 m (5′-7″)	50	108 (240)
	DS 900-1½ (DS 36-1½)	900 (36)	1140 (3′-9″)	560 (22)	1320 (4′-4″)	1.366 m (4′-5¾″)	4.35 m (14′-3¾″)	2.47 m (8′-1½″)	1.3 m (4′-2¾″)	1.119 m (3′-8″)	2.14 m (7′-0½″)	2.21 m (7′-3¼″)	90 (3¾)	40 (1½)	55°	3.8 (4.9)	1.34 m (4′-11″)	1.43 m (4′-8″)	2.51 m (8′-5″)	5.29 m (18′-0″)	1.43 m (4′-8″)	1.93 m (6′-4″)	56	140 (310)
40°	DS 375-1½ (DS 15-1½)	375 (15)	720 (28)	260 (10)	740 (29)	631 (24¾)	2.71 m (8′-10″)	1.71 m (5′-6¼″)	780 (31)	483 (19)	1.32 m (4′-3½″)	1.39 m (4′-6½″)	100 (3¾)	40 (1¼)	50°	1.5 (1.9)	840 (37)	700 (27)	1.71 m (5′-8″)	3.25 m (11′-0″)	700 (27)	1.19 m (3′-11″)	38	54 (120)
	DS 450-1½ (DS 18-1½)	450 (18)	720 (28)	330 (13)	810 (32)	730 (28¾)	2.81 m (9′-1¾″)	1.71 m (5′-6¼″)	780 (31)	559 (22)	1.37 m (4′-5½″)	1.44 m (4′-8¼″)	100 (3¾)	40 (1¼)	50°	1.7 (2.2)	860 (36)	798 (31)	1.76 m (5′-8″)	3.41 m (11′-3″)	798 (31)	1.30 m (4′-3″)	38	59 (130)
	DS 600-1½ (DS 24-1½)	600 (24)	870 (34)	410 (16)	990 (39)	995 (3′-3¼″)	3.47 m (11′-4″)	2.08 m (6′-8½″)	960 (37½)	762 (30)	1.7 m (5′-6½″)	1.77 m (5′-9½″)	100 (3¾)	40 (1¼)	50°	2.4 (3.1)	1.02 m (3′-8″)	1.07 m (3′-6″)	2.1 m (6′-10″)	4.18 m (14′-0″)	1.07 m (3′-6″)	1.58 m (5′-2″)	48	90 (200)
	DS 750-1½ (DS 30-1½)	750 (30)	990 (39)	480 (19)	1140 (3′-9″)	1.193 m (3′-11″)	3.98 m (13′-0¾″)	2.35 m (7′-8¼″)	1.1 m (3′-7″)	914 (36)	1.95 m (6′-5″)	2.03 m (6′-7¾″)	100 (3¾)	40 (1¼)	50°	3.1 (4.0)	1.15 m (4′-2″)	1.26 m (4′-2″)	2.38 m (7′-11″)	4.79 m (16′-3″)	1.26 m (4′-2″)	1.78 m (5′-10″)	54	117 (260)
	DS 900-1½ (DS 36-1½)	900 (36)	1140 (3′-9″)	560 (22)	1320 (4′-4″)	1.461 m (4′-9½″)	4.64 m (15′-3″)	2.7 m (8′-10½″)	1.26 m (4′-1¾″)	1.119 m (3′-8″)	2.28 m (7′-6″)	2.35 m (7′-9″)	100 (3¾)	40 (1¼)	50°	4.1 (5.3)	1.32 m (4′-10″)	1.53 m (5′-0″)	2.74 m (9′-2″)	5.59 m (19′-0″)	1.53 m (5′-0″)	2.03 m (6′-8″)	62	153 (340)
45°	DS 375-1½ (DS 15-1½)	375 (15)	720 (28)	260 (10)	740 (29)	683 (27)	2.92 m (9′-6″)	1.88 m (6′-1¼″)	780 (30¼)	483 (19)	1.42 m (4′-7½″)	1.5 m (4′-10½″)	100 (4)	30 (1¼)	45°	1.6 (2.1)	828 (36)	753 (29)	1.89 m (6′-1″)	3.47 m (11′-6″)	753 (29)	1.25 m (4′-1″)	40	59 (130)
	DS 450-1½ (DS 18-1½)	450 (18)	720 (28)	330 (13)	810 (32)	791 (31)	3.03 m (9′-10¼″)	1.88 m (6′-1¼″)	780 (30¼)	559 (22)	1.47 m (4′-9½″)	1.56 m (5′-0¾″)	100 (4)	30 (1¼)	45°	1.8 (2.4)	847 (36)	859 (34)	1.94 m (6′-2″)	3.64 m (12′-0″)	859 (34)	1.37 m (4′-6″)	44	68 (150)
	DS 600-1½ (DS 24-1½)	600 (24)	870 (34)	410 (16)	990 (39)	1.078 m (3′-6½″)	3.74 m (12′-2½″)	2.28 m (7′-4¾″)	950 (36¾)	762 (30)	1.83 m (5′-11½″)	1.91 m (6′-3″)	100 (4)	30 (1¼)	45°	2.6 (3.4)	1.0 m (3′-8″)	1.15 m (3′-9″)	2.31 m (7′-7″)	4.47 m (15′-0″)	1.15 m (3′-9″)	1.65 m (5′-5″)	50	95 (210)
	DS 750-1½ (DS 30-1½)	750 (30)	990 (39)	480 (19)	1140 (3′-9″)	1.293 m (4′-3″)	4.29 m (14′-1″)	2.59 m (8′-6″)	1.08 m (3′-6¼″)	914 (36)	2.1 m (6′-11″)	2.19 m (7′-2″)	100 (4)	30 (1¼)	45°	3.4 (4.4)	1.13 m (4′-2″)	1.36 m (4′-5″)	2.63 m (8′-8″)	5.12 m (17′-3″)	1.36 m (4′-5″)	1.86 m (6′-1″)	62	135 (300)
	DS 900-1½ (DS 36-1½)	900 (36)	1140 (3′-9″)	560 (22)	1320 (4′-4″)	1.583 m (5′-2¼″)	5.01 m (16′-5¼″)	2.98 m (9′-9½″)	1.24 m (4′-0¾″)	1.119 m (3′-8″)	2.46 m (8′-1″)	2.55 m (8′-4¼″)	100 (4)	30 (1¼)	45°	4.4 (5.7)	1.3 m (4′-10″)	1.65 m (5′-5″)	3.02 m (10′-0″)	5.97 m (20′-3″)	1.65 m (5′-5″)	2.16 m (7′-1″)	66	167 (370)
50°	DS 375-1½ (DS 15-1½)	375 (15)	720 (28)	260 (10)	740 (29)	751 (29½)	3.18 m (10′-4½″)	2.11 m (6′-10″)	770 (29¾)	483 (19)	1.55 m (5′-0½″)	1.64 m (5′-4″)	110 (4¼)	30 (1)	40°	1.8 (2.3)	817 (35)	822 (32)	2.11 m (6′-11″)	3.75 m (12′-6″)	822 (32)	1.32 m (4′-4″)	46	63 (140)
	DS 450-1½ (DS 18-1½)	450 (18)	720 (28)	330 (13)	810 (32)	870 (34¼)	3.31 m (10′-9″)	2.11 m (6′-10″)	770 (29¾)	559 (22)	1.61 m (5′-2¾″)	1.7 m (5′-6¼″)	110 (4¼)	30 (1)	40°	2.0 (2.6)	836 (36)	939 (37)	2.16 m (6′-11″)	3.94 m (13′-0″)	939 (37)	1.45 m (4′-9″)	46	72 (160)
	DS 600-1½ (DS 24-1½)	600 (24)	870 (34)	410 (16)	990 (39)	1.185 m (3′-10¾″)	4.08 m (13′-4¼″)	2.55 m (8′-3½″)	930 (36¼)	762 (30)	2 m (6′-6¼″)	2.09 m (6′-10″)	110 (4¼)	30 (1)	40°	2.8 (3.7)	990 (3′-7″)	1.26 m (4′-1″)	2.58 m (8′-4″)	4.83 m (16′-0″)	1.26 m (4′-1″)	1.75 m (5′-9″)	56	104 (230)
	DS 750-1½ (DS 30-1½)	750 (30)	990 (39)	480 (19)	1140 (3′-9″)	1.422 m (4′-8″)	4.7 m (15′-5″)	2.9 m (9′-6″)	1.06 m (3′-5½″)	914 (36)	2.3 m (7′-6¾″)	2.39 m (7′-10¼″)	110 (4¼)	30 (1)	40°	3.7 (4.8)	1.12 m (4′-1″)	1.49 m (4′-10″)	2.94 m (9′-7″)	5.54 m (18′-6″)	1.49 m (4′-10″)	1.98 m (6′-6″)	66	144 (320)
	DS 900-1½ (DS 36-1½)	900 (36)	1140 (3′-9″)	560 (22)	1320 (4′-4″)	1.741 m (5′-8½″)	5.48 m (18′-0¼″)	3.34 m (10′-11½″)	1.22 m (4′-0″)	1.119 m (3′-8″)	2.7 m (8′-10¼″)	2.78 m (9′-2″)	110 (4¼)	30 (1)	40°	4.8 (6.3)	1.28 m (4′-9″)	1.81 m (5′-11″)	3.38 m (11′-1″)	6.47 m (21′-9″)	1.81 m (5′-11″)	2.31 m (7′-7″)	74	185 (410)
55°	DS 375-1½ (DS 15-1½)	375 (15)	720 (28)	260 (10)	740 (29)	842 (33)	3.54 m (11′-6¼″)	2.4 m (7′-9″)	760 (29¼)	483 (19)	1.72 m (5′-7¼″)	1.82 m (5′-11″)	110 (4½)	30 (1)	35°	2.0 (2.6)	809 (35)	914 (36)	2.4 m (7′-10″)	4.12 m (13′-9″)	914 (36)	1.42 m (4′-8″)	50	68 (150)
	DS 450-1½ (DS 18-1½)	450 (18)	720 (28)	330 (13)	810 (32)	975 (38¼)	3.68 m (11′-11½″)	2.4 m (7′-9″)	760 (29¼)	559 (22)	1.79 m (5′-9¾″)	1.89 m (6′-1¾″)	110 (4½)	30 (1)	35°	2.2 (2.9)	827 (36)	1.05 m (3′-5″)	2.46 m (7′-10″)	4.33 m (14′-3″)	1.05 m (3′-5″)	1.55 m (5′-1″)	50	77 (170)
	DS 600-1½ (DS 24-1½)	600 (24)	870 (34)	410 (16)	990 (39)	1.329 m (4′-4¼″)	4.55 m (14′-10½″)	2.9 m (9′-5″)	910 (35¾)	762 (30)	2.23 m (7′-3¼″)	2.32 m (7′-7¼″)	110 (4½)	30 (1)	35°	3.2 (4.2)	978 (3′-6″)	1.4 m (4′-7″)	2.94 m (9′-5″)	5.32 m (17′-6″)	1.4 m (4′-7″)	1.91 m (6′-3″)	62	117 (260)
	DS 750-1½ (DS 30-1½)	750 (30)	990 (39)	480 (19)	1140 (3′-9″)	1.594 m (5′-2¾″)	5.24 m (17′-2¼″)	3.3 m (10′-9¾″)	1.04 m (3′-5″)	914 (36)	2.57 m (8′-5¼″)	2.67 m (8′-9″)	110 (4½)	30 (1)	35°	4.1 (5.4)	1.1 m (4′-1″)	1.66 m (5′-6″)	3.33 m (10′-11″)	6.1 m (20′-6″)	1.66 m (5′-6″)	2.19 m (7′-2″)	74	158 (350)
	DS 900-1½ (DS 36-1½)	900 (36)	1140 (3′-9″)	560 (22)	1320 (4′-4″)	1.951 m (6′-4¾″)	6.12 m (20′-1¼″)	3.79 m (12′-5¾″)	1.2 m (3′-11¼″)	1.119 m (3′-8″)	3.01 m (9′-10¾″)	3.11 m (10′-2½″)	110 (4½)	30 (1)	35°	5.4 (7.1)	1.26 m (4′-9″)	2.02 m (6′-7″)	3.84 m (12′-8″)	7.12 m (24′-0″)	2.02 m (6′-7″)	2.52 m (8′-3″)	86	212 (470)
60°	DS 375-1½ (DS 15-1½)	375 (15)	720 (28)	260 (10)	740 (29)	966 (38)	4.03 m (13′-1¼″)	2.78 m (9′-0¼″)	750 (29)	483 (19)	1.96 m (6′-4½″)	2.07 m (6′-8¾″)	120 (4½)	20 (0¾)	30°	2.2 (2.9)	802 (34)	1.04 m (3′-5″)	2.78 m (9′-0″)	4.62 m (15′-3″)	1.04 m (3′-5″)	1.55 m (5′-1″)	54	77 (170)
	DS 450-1½ (DS 18-1½)	450 (18)	720 (28)	330 (13)	810 (32)	1.118 m (3′-8″)	4.18 m (13′-7¼″)	2.78 m (9′-0¼″)	750 (29)	559 (22)	2.04 m (6′-7½″)	2.14 m (6′-11¾″)	120 (4½)	20 (0¾)	30°	2.5 (3.2)	820 (34)	1.19 m (3′-11″)	2.85 m (9′-0″)	4.86 m (15′-9″)	1.19 m (3′-11″)	1.70 m (5′-7″)	58	90 (200)
	DS 600-1½ (DS 24-1½)	600 (24)	870 (34)	410 (16)	990 (39)	1.524 m (5′-0″)	5.19 m (16′-11¼″)	3.36 m (10′-11¼″)	900 (35¼)	762 (30)	2.04 m (8′-3½″)	2.65 m (8′-7¾″)	120 (4½)	20 (0¾)	30°	3.6 (4.7)	969 (3′-6″)	1.6 m (5′-3″)	3.41 m (11′-0″)	5.98 m (19′-9″)	1.6 m (5′-3″)	2.11 m (6′-11″)	72	135 (300)
	DS 750-1½ (DS 30-1½)	750 (30)	990 (39)	480 (19)	1140 (3′-9″)	1.828 m (6′-0″)	5.97 m (19′-7¼″)	3.83 m (12′-6¾″)	1.03 m (3′-4½″)	914 (36)	2.93 m (9′-7½″)	3.04 m (9′-11¾″)	120 (4½)	20 (0¾)	30°	4.7 (6.1)	1.09 m (4′-1″)	1.9 m (6′-3″)	3.87 m (12′-8″)	6.86 m (23′-0″)	1.9 m (6′-3″)	2.41 m (7′-11″)	82	176 (390)
	DS 900-1½ (DS 36-1½)	900 (36)	1140 (3′-9″)	560 (22)	1320 (4′-4″)	2.238 m (7′-4″)	6.98 m (22′-11¼″)	4.41 m (14′-5¾″)	1.18 m (3′-10½″)	1.119 m (3′-8″)	3.44 m (11′-3½″)	3.54 m (11′-7¾″)	119 (4½)	20 (0¾)	30°	6.2 (8.1)	1.25 m (4′-7″)	2.31 m (7′-7″)	4.46 m (14′-7″)	8.02 m (26′-9″)	2.31 m (7′-7″)	2.82 m (9′-3″)	98	239 (530)

All dimensions are in millimeters (inches) unless otherwise shown.

All slope ratios are expressed as units of vertical displacement to units of horizontal displacement (V:H).

Illinois Department of Transportation

APPROVED January 1, 2007
Ralph E. Anderson
ENGINEER OF BRIDGES AND STRUCTURES

APPROVED January 1, 2007
Michael L. Heine
ENGINEER OF DESIGN AND ENVIRONMENT

ISSUED 1-1-97

REINFORCED CONCRETE END SECTIONS
FOR PIPE CULVERTS
375 mm (15″) THRU 900 mm (36″) DIA.
SKEWED WITH ROADWAY
(Sheet 3 of 5)

STANDARD 542201-01

WINGS FOR 1:2 SLOPE

Skew Angle	Design No.	Nominal Dia. For Pipe	DIMENSIONS FOR CONCRETE A	B	C	D	E	F	G	H	J	K	M	N	α	Concrete 2 End Secs. m3 (yd3)	Reinf. Bars - 2 End Sections h - bars o	p	q	Lgth.	h_1 - bars p	Lgth.	v-bars No.	Bars for 2 End Sections kg (lbs)
5°	DS 375-2 (DS 15-2)	375 (15)	960 (38)	260 (10)	740 (29)	485 (19)	2.63 m (8′-7¾″)	1.42 m (4′-8¼″)	1.31 m (4′-3½″)	483 (19)	1.31 m (4′-3¾″)	1.32 m (4′-4″)	70 (2¾)	60 (2¼)	85°	1.5 (1.9)	1.33 m (4′-7″)	551 (21)	1.45 m (4′-11″)	3.33 m (11′-3″)	551 (21)	1.04 m (3′-5″)	34	50 (110)
	DS 450-2 (DS 18-2)	450 (18)	960 (38)	330 (13)	810 (32)	561 (22)	2.7 m (8′-10¾″)	1.42 m (4′-8¼″)	1.31 m (4′-3½″)	559 (22)	1.35 m (4′-5¼″)	1.35 m (4′-5½″)	70 (2¾)	60 (2¼)	85°	1.5 (2.0)	1.36 m (4′-7″)	626 (24)	1.48 m (4′-11″)	3.47 m (11′-6″)	626 (24)	1.12 m (3′-8″)	34	54 (120)
	DS 600-2 (DS 24-2)	600 (24)	1.16 m (3′-10″)	410 (16)	990 (39)	765 (30)	3.31 m (10′-11″)	1.72 m (5′-8″)	1.58 m (5′-2½″)	762 (30)	1.65 m (5′-5¼″)	1.66 m (5′-5¾″)	70 (2¾)	60 (2¼)	85°	2.2 (2.9)	1.62 m (5′-5″)	832 (32)	1.77 m (5′-11″)	4.22 m (14′-0″)	832 (32)	1.32 m (4′-4″)	42	81 (180)
	DS 750-2 (DS 30-2)	750 (30)	1.32 m (4′-4″)	480 (19)	1.14 m (3′-9″)	917 (36)	3.78 m (12′-5″)	1.96 m (6′-5″)	1.79 m (5′-10½″)	914 (36)	1.89 m (6′-2¼″)	1.89 m (6′-2¾″)	70 (2¾)	60 (2¼)	85°	2.8 (3.7)	1.84 m (6′-3″)	983 (39)	2.0 m (6′-9″)	4.83 m (16′-3″)	983 (39)	1.50 m (4′-11″)	48	104 (230)
	DS 900-2 (DS 36-2)	900 (36)	1.52 m (5′-0″)	560 (22)	1.32 m (4′-4″)	1.123 m (3′-8¼″)	4.39 m (14′-5″)	2.25 m (7′-4¾″)	2.07 m (6′-9¼″)	1.119 m (3′-8″)	2.19 m (7′-2¼″)	2.2 m (7′-2¾″)	70 (2¾)	60 (2¼)	85°	3.4 (4.5)	2.12 m (7′-2″)	1.19 m (3′-11″)	2.3 m (7′-8″)	5.6 m (18′-9″)	1.19 m (3′-11″)	1.70 m (5′-7″)	54	135 (300)
10°	DS 375-2 (DS 15-2)	375 (15)	960 (38)	260 (10)	740 (29)	490 (19¼)	2.65 m (8′-9″)	1.5 m (4′-11″)	1.26 m (4′-1½″)	483 (19)	1.32 m (4′-4″)	1.33 m (4′-5″)	70 (2¾)	60 (2¼)	80°	1.5 (2.0)	1.28 m (4′-4″)	557 (22)	1.52 m (5′-1″)	3.36 m (11′-3″)	557 (22)	1.07 m (3′-6″)	34	50 (110)
	DS 450-2 (DS 18-2)	450 (18)	960 (38)	330 (13)	810 (32)	568 (22¼)	2.73 m (9′-0″)	1.5 m (4′-11″)	1.26 m (4′-1½″)	559 (22)	1.36 m (4′-5¾″)	1.37 m (4′-6¼″)	70 (2¾)	60 (2¼)	80°	1.6 (2.1)	1.32 m (4′-4″)	633 (25)	1.55 m (5′-1″)	3.5 m (11′-6″)	633 (25)	1.14 m (3′-9″)	34	54 (120)
	DS 600-2 (DS 24-2)	600 (24)	1.16 m (3′-10″)	410 (16)	990 (39)	774 (30½)	3.34 m (11′-0¼″)	1.81 m (5′-11½″)	1.52 m (5′-0″)	762 (30)	1.66 m (5′-5¾″)	1.68 m (5′-6½″)	70 (2¾)	60 (2¼)	80°	2.3 (3.0)	1.57 m (5′-4″)	841 (33)	1.85 m (6′-2″)	4.26 m (14′-3″)	841 (33)	1.35 m (4′-5″)	42	81 (180)
	DS 750-2 (DS 30-2)	750 (30)	1.32 m (4′-4″)	480 (19)	1.14 m (3′-9″)	928 (36½)	3.82 m (12′-6¾″)	2.06 m (6′-9″)	1.73 m (5′-8″)	914 (36)	1.9 m (6′-3″)	1.92 m (6′-3¾″)	70 (2¾)	60 (2¼)	80°	2.9 (3.8)	1.78 m (6′-0″)	993 (39)	2.1 m (7′-0″)	4.87 m (16′-3″)	993 (39)	1.50 m (4′-11″)	48	104 (230)
	DS 900-2 (DS 36-2)	900 (36)	1.52 m (5′-0″)	560 (22)	1.32 m (4′-4″)	1.136 m (3′-8¾″)	4.44 m (14′-7″)	2.37 m (7′-9¼″)	1.99 m (6′-6¼″)	1.119 m (3′-8″)	2.21 m (7′-3″)	2.23 m (7′-4″)	70 (2¾)	60 (2¼)	80°	3.6 (4.7)	2.04 m (7′-0″)	1.2 m (3′-11″)	2.42 m (8′-1″)	5.66 m (19′-0″)	1.2 m (3′-11″)	1.70 m (5′-7″)	54	135 (300)
15°	DS 375-2 (DS 15-2)	375 (15)	960 (38)	260 (10)	740 (29)	500 (19¾)	2.7 m (8′-10¾″)	1.58 m (5′-2½″)	1.21 m (4′-0″)	483 (19)	1.34 m (4′-4¾″)	1.36 m (4′-6″)	80 (3)	50 (2)	75°	1.5 (2.0)	1.24 m (4′-3″)	567 (22)	1.6 m (5′-5″)	3.41 m (11′-6″)	567 (22)	1.07 m (3′-6″)	34	50 (110)
	DS 450-2 (DS 18-2)	450 (18)	960 (38)	330 (13)	810 (32)	579 (22¾)	2.78 m (9′-2″)	1.58 m (5′-2½″)	1.21 m (4′-0″)	559 (22)	1.38 m (4′-6½″)	1.4 m (4′-7½″)	80 (3)	50 (2)	75°	1.7 (2.2)	1.27 m (4′-3″)	644 (25)	1.64 m (5′-5″)	3.55 m (11′-9″)	644 (25)	1.14 m (3′-9″)	34	54 (120)
	DS 600-2 (DS 24-2)	600 (24)	1.16 m (3′-10″)	410 (16)	990 (39)	789 (31)	3.4 m (11′-2¾″)	1.91 m (6′-3½″)	1.47 m (4′-10″)	762 (30)	1.69 m (5′-6¾″)	1.72 m (5′-8″)	80 (3)	50 (2)	75°	2.4 (3.1)	1.52 m (5′-2″)	857 (34)	1.95 m (6′-6″)	4.32 m (14′-6″)	857 (34)	1.37 m (4′-6″)	42	81 (180)
	DS 750-2 (DS 30-2)	750 (30)	1.32 m (4′-4″)	480 (19)	1.14 m (3′-9″)	946 (37¼)	3.89 m (12′-9¼″)	2.17 m (7′-1½″)	1.67 m (5′-5½″)	914 (36)	1.93 m (6′-4″)	1.96 m (6′-5¼″)	80 (3)	50 (2)	75°	3.0 (3.9)	1.72 m (5′-10″)	1.01 m (3′-4″)	2.21 m (7′-4″)	4.94 m (16′-6″)	1.01 m (3′-4″)	1.52 m (5′-0″)	52	113 (250)
	DS 900-2 (DS 36-2)	900 (36)	1.52 m (5′-0″)	560 (22)	1.32 m (4′-4″)	1.158 m (3′-9½″)	4.52 m (14′-10¼″)	2.5 m (8′-2½″)	1.92 m (6′-3½″)	1.119 m (3′-8″)	2.25 m (7′-4½″)	2.27 m (7′-5¾″)	80 (3)	50 (2)	75°	3.8 (5.0)	1.97 m (6′-9″)	1.22 m (4′-0″)	2.55 m (8′-6″)	5.74 m (19′-3″)	1.22 m (4′-0″)	1.73 m (5′-8″)	56	140 (310)
20°	DS 375-2 (DS 15-2)	375 (15)	960 (38)	260 (10)	740 (29)	514 (20¼)	2.77 m (9′-1½″)	1.68 m (5′-6¼″)	1.18 m (3′-10½″)	483 (19)	1.37 m (4′-6″)	1.4 m (4′-7½″)	80 (3)	50 (2)	70°	1.6 (2.1)	1.21 m (4′-2″)	581 (23)	1.69 m (5′-8″)	3.48 m (11′-9″)	581 (23)	1.09 m (3′-7″)	36	50 (110)
	DS 450-2 (DS 18-2)	450 (18)	960 (38)	330 (13)	810 (32)	595 (23½)	2.85 m (9′-4½″)	1.68 m (5′-6¼″)	1.18 m (3′-10½″)	559 (22)	1.41 m (4′-7½″)	1.44 m (4′-9″)	80 (3)	50 (2)	70°	1.8 (2.3)	1.24 m (4′-2″)	661 (26)	1.73 m (5′-8″)	3.63 m (12′-0″)	661 (26)	1.17 m 3′-10″)	36	59 (130)
	DS 600-2 (DS 24-2)	600 (24)	1.16 m (3′-10″)	410 (16)	990 (39)	811 (32)	3.49 m (11′-6¼″)	2.03 m (6′-8¼″)	1.42 m (4′-8¼″)	762 (30)	1.73 m (5′-8½″)	1.76 m (5′-9¾″)	80 (3)	50 (2)	70°	2.4 (3.2)	1.47 m (5′-0″)	879 (35)	2.07 m (6′-10″)	4.42 m (14′-9″)	879 (35)	1.40 m (4′-7″)	48	90 (200)
	DS 750-2 (DS 30-2)	750 (30)	1.32 m (4′-4″)	480 (19)	1.14 m (3′-9″)	973 (38¼)	3.99 m (13′-1¼″)	2.3 m (7′-6¾″)	1.61 m (5′-3½″)	914 (36)	1.98 m (6′-6″)	2.01 m (6′-7¼″)	80 (3)	50 (2)	70°	3.1 (4.1)	1.67 m (5′-9″)	1.04 m (3′-5″)	2.35 m (7′-10″)	5.05 m (17′-0″)	1.04 m (3′-5″)	1.55 m (5′-1″)	52	113 (250)
	DS 900-2 (DS 36-2)	900 (36)	1.52 m (5′-0″)	560 (22)	1.32 m (4′-4″)	1.191 m (3′-10¾″)	4.64 m (15′-3″)	2.65 m (8′-8½″)	1.86 m (6′-1¼″)	1.119 m (3′-8″)	2.3 m (7′-6¾″)	2.34 m (7′-8¼″)	80 (3)	50 (2)	70°	4.1 (5.3)	1.91 m (6′-6″)	1.26 m (4′-1″)	2.7 m (8′-11″)	5.87 m (19′-6″)	1.26 m (4′-1″)	1.75 m (5′-9″)	58	144 (320)
25°	DS 375-2 (DS 15-2)	375 (15)	960 (38)	260 (10)	740 (29)	533 (21)	2.86 m (9′-5″)	1.79 m (5′-10¾″)	1.14 m (3′-9″)	483 (19)	1.41 m (4′-7½″)	1.45 m (4′-9½″)	90 (3¼)	50 (1¾)	65°	1.7 (2.2)	1.12 m (4′-1″)	600 (23)	1.8 m (6′-0″)	3.58 m (12′-0″)	600 (23)	1.09 m (3′-7″)	38	54 (120)
	DS 450-2 (DS 18-2)	450 (18)	960 (38)	330 (13)	810 (32)	617 (24¼)	2.95 m (9′-8½″)	1.79 m (5′-10¾″)	1.14 m (3′-9″)	559 (22)	1.45 m (4′-9¼″)	1.5 m (4′-11¼″)	90 (3¼)	50 (1¾)	65°	1.8 (2.4)	1.2 m (4′-0″)	683 (27)	1.85 m (6′-0″)	3.73 m (12′-3″)	683 (27)	1.19 m (3′-11″)	42	63 (140)
	DS 600-2 (DS 24-2)	600 (24)	1.16 m (3′-10″)	410 (16)	990 (39)	841 (33)	3.61 m (11′-11″)	2.16 m (7′-1½″)	1.38 m (4′-6½″)	762 (30)	1.78 m (5′-10½″)	1.83 m (6′-0½″)	90 (3¼)	50 (1¾)	65°	2.6 (3.4)	1.43 m (4′-11″)	909 (35)	2.2 m (7′-4″)	4.55 m (15′-3″)	909 (35)	1.40 m (4′-7″)	48	90 (200)
	DS 750-2 (DS 30-2)	750 (30)	1.32 m (4′-4″)	480 (19)	1.14 m (3′-9″)	1.008 m (3′-3¾″)	4.13 m (13′-6¾″)	2.46 m (8′-0¾″)	1.57 m (5′-1¾″)	914 (36)	2.04 m (6′-8½″)	2.09 m (6′-10¼″)	90 (3¼)	50 (1¾)	65°	3.3 (4.3)	1.62 m (5′-6″)	1.08 m (3′-6″)	2.5 m (8′-3″)	5.2 m (17′-3″)	1.08 m (3′-6″)	1.58 m (5′-2″)	52	113 (250)
	DS 900-2 (DS 36-2)	900 (36)	1.52 m (5′-0″)	560 (22)	1.32 m (4′-4″)	1.235 m (4′-0½″)	4.8 m (15′-9¼″)	2.83 m (9′-3¾″)	1.81 m (5′-11¼″)	1.119 m (3′-8″)	2.38 m (7′-9¾″)	2.42 m (7′-11½″)	90 (3¼)	50 (1¾)	65°	4.3 (5.6)	1.86 m (6′-5″)	1.3 m (4′-3″)	2.88 m (9′-7″)	6.04 m (20′-3″)	1.3 m (4′-3″)	1.80 m (5′-11″)	60	149 (330)
30°	DS 375-2 (DS 15-2)	375 (15)	960 (38)	260 (10)	740 (29)	558 (22)	2.98 m (9′-9¾″)	1.92 m (6′-4″)	1.11 m (3′-8″)	483 (19)	1.46 m (4′-9¾″)	1.52 m (5′-0″)	90 (3½)	40 (1½)	60°	1.8 (2.3)	1.15 m (4′-0″)	626 (24)	1.93 m (6′-6″)	3.71 m (12′-6″)	626 (24)	1.12 m (3′-8″)	42	59 (130)
	DS 450-2 (DS 18-2)	450 (18)	960 (38)	330 (13)	810 (32)	645 (25½)	3.07 m (10′-1½″)	1.92 m (6′-4″)	1.11 m (3′-8″)	559 (22)	1.51 m (4′-11½″)	1.56 m (5′-2″)	90 (3½)	40 (1½)	60°	1.9 (2.5)	1.18 m (4′-0″)	712 (28)	1.98 m (6′-5″)	3.87 m (12′-9″)	712 (28)	1.22 m (4′-0″)	42	68 (150)
	DS 600-2 (DS 24-2)	600 (24)	1.16 m (3′-10″)	410 (16)	990 (39)	880 (34¾)	3.77 m (12′-5″)	2.32 m (7′-8″)	1.34 m (4′-5″)	762 (30)	1.86 m (6′-1½″)	1.91 m (6′-3½″)	90 (3½)	40 (1½)	60°	2.8 (3.6)	1.4 m (4′-10″)	949 (37)	2.37 m (7′-10″)	4.71 m (15′-9″)	949 (37)	1.45 m (4′-9″)	52	95 (210)
	DS 750-2 (DS 30-2)	750 (30)	1.32 m (4′-4″)	480 (19)	1.14 m (3′-9″)	1.055 m (3′-5½″)	4.31 m (14′-1¾″)	2.64 m (8′-8″)	1.53 m (5′-0″)	914 (36)	2.13 m (6′-11¾″)	2.18 m (7′-2″)	90 (3½)	40 (1½)	60°	3.4 (4.5)	1.58 m (5′-6″)	1.12 m (3′-8″)	2.69 m (8′-10″)	5.39 m (18′-0″)	1.12 m (3′-8″)	1.63 m (5′-4″)	56	122 (270)
	DS 900-2 (DS 36-2)	900 (36)	1.52 m (5′-0″)	560 (22)	1.32 m (4′-4″)	1.292 m (4′-2¾″)	5.01 m (16′-5½″)	3.04 m (10′-0″)	1.76 m (5′-9¼″)	1.119 m (3′-8″)	2.48 m (8′-1¾″)	2.53 m (8′-3¾″)	90 (3½)	40 (1½)	60°	4.5 (5.9)	1.82 m (6′-4″)	1.36 m (4′-5″)	3.09 m (10′-3″)	6.26 m (21′-0″)	1.36 m (4′-5″)	1.86 m (6′-1″)	66	162 (360)

All dimensions are in millimeters (inches) unless otherwise shown.

All slope ratios are expressed as units of vertical displacement to units of horizontal displacement (V:H).

Illinois Department of Transportation

APPROVED January 1, 2007
Ralph E. Anderson
ENGINEER OF BRIDGES AND STRUCTURES

APPROVED January 1, 2007
Michael L. Hine
ENGINEER OF DESIGN AND ENVIRONMENT

ISSUED 1-1-97

REINFORCED CONCRETE END SECTIONS
FOR PIPE CULVERTS
375 mm (15″) THRU 900 mm (36″) DIA.
SKEWED WITH ROADWAY
(Sheet 4 of 5)

STANDARD 542201-01

WINGS FOR 1:2 SLOPE

Skew Angle	Design No.	Nominal Dia. For Pipe	DIMENSIONS FOR CONCRETE A	B	C	D	E	F	G	H	J	K	M	N	α	Concrete 2 End Secs. m3 (yd3)	Reinf. Bars - 2 End Sections h - bars o	p	q	Lgth.	h1 - bars p	Lgth.	v-bars No.	Bars for 2 End Sections kg (lbs)
35°	DS 375-2 (DS 15-2)	375 (15)	960 (38)	260 (10)	740 (29)	590 (23 1/4)	3.14 m (10'-4")	2.08 m (6'-10 1/4")	1.08 m (3'-6 3/4")	485 (19)	1.54 m (5'-0 3/4")	1.6 m (5'-3 1/4")	90 (3 3/4)	40 (1 1/2)	55°	1.8 (2.4)	1.13 m (3'-11")	658 (26)	2.09 m (6'-11")	3.87 m (13'-0")	658 (26)	1.17 m (3'-10")	44	63 (140)
	DS 450-2 (DS 18-2)	450 (18)	960 (38)	330 (13)	810 (32)	683 (27)	3.23 m (10'-7 3/4")	2.08 m (6'-10 1/4")	1.09 m (3'-6 3/4")	559 (22)	1.58 m (5'-2 1/2")	1.65 m (5'-5 1/4")	90 (3 3/4)	40 (1 1/2)	55°	2.0 (2.6)	1.15 m (3'-11")	750 (29)	2.14 m (6'-11")	4.04 m (13'-3")	750 (29)	1.25 m (4'-1")	44	68 (150)
	DS 600-2 (DS 24-2)	600 (24)	1.16 m (3'-10")	410 (16)	990 (39)	930 (36 1/2)	3.97 m (13'-1")	2.52 m (8'-3 1/2")	1.31 m (4'-3 3/4")	762 (30)	1.95 m (6'-5 1/4")	2.02 m (6'-7 3/4")	90 (3 3/4)	40 (1 1/2)	55°	2.9 (3.8)	1.37 m (4'-8")	1.0 m (39)	2.56 m (8'-4")	4.93 m (16'-3")	1.0 m (39)	1.50 m (4'-11")	52	99 (220)
	DS 750-2 (DS 30-2)	750 (30)	1.32 m (4'-4")	480 (19)	1.14 m (3'-9")	1.116 m (3'-8")	4.54 m (14'-11")	2.86 m (9'-4 1/2")	1.49 m (4'-10 1/2")	914 (36)	2.24 m (7'-4 1/4")	2.3 m (7'-6 3/4")	90 (3 3/4)	40 (1 1/2)	55°	3.7 (4.8)	1.55 m (5'-4")	1.18 m (3'-11")	2.9 m (9'-6")	5.64 m (18'-9")	1.18 m (3'-11")	1.70 m (5'-7")	60	131 (290)
	DS 900-2 (DS 36-2)	900 (36)	1.52 m (5'-0")	560 (22)	1.32 m (4'-4")	1.366 m (4'-5 3/4")	5.28 m (17'-4 1/4")	3.29 m (10'-10")	1.72 m (5'-7 3/4")	1.119 m (3'-8")	2.61 m (8'-6 3/4")	2.67 m (8'-9 1/2")	90 (3 3/4)	40 (1 1/2)	55°	4.8 (6.3)	1.78 m (6'-1")	1.43 m (4'-8")	3.34 m (11'-0")	6.55 m (21'-9")	1.43 m (4'-8")	1.93 m (6'-4")	70	171 (380)
40°	DS 375-2 (DS 15-2)	375 (15)	960 (38)	260 (10)	740 (29)	631 (24 3/4)	3.34 m (11'-0")	2.27 m (7'-6")	1.06 m (3'-6")	483 (19)	1.63 m (5'-4 1/2")	1.71 m (5'-7 1/2")	100 (3 3/4)	40 (1 1/4)	50°	2.0 (2.6)	1.1 m (3'-10")	700 (28)	2.28 m (7'-7")	4.08 m (13'-9")	700 (28)	1.19 m (3'-11")	48	68 (150)
	DS 450-2 (DS 18-2)	450 (18)	960 (38)	330 (13)	810 (32)	730 (28 3/4)	3.44 m (11'-4")	2.27 m (7'-6")	1.08 m (3'-6")	559 (22)	1.68 m (5'-6 1/2")	1.76 m (5'-9 1/2")	100 (3 3/4)	40 (1 1/4)	50°	2.1 (2.8)	1.13 m (3'-10")	798 (31)	2.34 m (7'-7")	4.26 m (14'-0")	798 (31)	1.30 m (4'-3")	48	72 (160)
	DS 600-2 (DS 24-2)	600 (24)	1.16 m (3'-10")	410 (16)	990 (39)	995 (3'-3 1/4")	4.23 m (13'-11 1/4")	2.75 m (9'-0 3/4")	1.28 m (4'-2 3/4")	762 (30)	2.08 m (6'-10 1/4")	2.15 m (7'-1")	100 (3 3/4)	40 (1 1/4)	50°	3.1 (4.1)	1.34 m (4'-7")	1.07 m (3'-6")	2.79 m (9'-2")	5.2 m (17'-3")	1.07 m (3'-6")	1.58 m (5'-2")	58	108 (240)
	DS 750-2 (DS 30-2)	750 (30)	1.32 m (4'-4")	480 (19)	1.14 m (3'-9")	1.193 m (3'-11")	4.84 m (15'-10 3/4")	3.12 m (10'-3")	1.46 m (4'-9 1/2")	914 (36)	2.38 m (7'-10")	2.46 m (8'-0 3/4")	100 (3 3/4)	40 (1 1/4)	50°	4.0 (5.2)	1.52 m (5'-3")	1.26 m (4'-2")	3.17 m (10'-4")	5.95 m (19'-9")	1.26 m (4'-2")	1.78 m (5'-10")	64	140 (310)
	DS 900-2 (DS 36-2)	900 (36)	1.52 m (5'-0")	560 (22)	1.32 m (4'-4")	1.461 m (4'-9 1/2")	5.63 m (18'-6")	3.6 m (11'-10")	1.68 m (5'-6 1/4")	1.119 m (3'-8")	2.78 m (9'-1 1/2")	2.85 m (9'-4 1/2")	100 (3 3/4)	40 (1 1/4)	50°	5.2 (6.8)	1.74 m (6'-0")	1.53 m (5'-0")	3.65 m (12'-0")	6.92 m (23'-0")	1.53 m (5'-0")	2.03 m (6'-8")	78	189 (420)
45°	DS 375-2 (DS 15-2)	375 (15)	960 (38)	260 (10)	740 (29)	683 (27)	3.6 m (11'-10 1/4")	2.51 m (8'-3 1/4")	1.04 m (3'-5 1/4")	483 (19)	1.76 m (5'-9 1/2")	1.84 m (6'-0 3/4")	100 (4)	30 (1 1/4)	45°	2.1 (2.8)	1.09 m (3'-9")	753 (29)	2.51 m (8'-4")	4.35 m (14'-6")	753 (29)	1.25 m (4'-1")	48	68 (150)
	DS 450-2 (DS 18-2)	450 (18)	960 (38)	330 (13)	810 (32)	791 (31)	3.7 m (12'-2 1/2")	2.51 m (8'-3 1/4")	1.04 m (3'-5 1/4")	559 (22)	1.81 m (5'-11 1/2")	1.89 m (6'-3")	100 (4)	30 (1 1/4)	45°	2.4 (3.1)	1.11 m (3'-10")	859 (34)	2.58 m (8'-4")	4.55 m (15'-0")	859 (34)	1.37 m (4'-6")	52	81 (180)
	DS 600-2 (DS 24-2)	600 (24)	1.16 m (3'-10")	410 (16)	990 (39)	1.078 m (3'-6 1/2")	4.56 m (15'-0 1/4")	3.03 m (10'-0 1/4")	1.26 m (4'-1 3/4")	762 (30)	2.24 m (7'-4 1/2")	2.32 m (7'-7 3/4")	100 (4)	30 (1 1/4)	45°	3.4 (4.4)	1.32 m (4'-6")	1.15 m (3'-9")	3.08 m (10'-0")	5.55 m (18'-3")	1.15 m (3'-9")	1.65 m (5'-5")	60	113 (250)
	DS 750-2 (DS 30-2)	750 (30)	1.32 m (4'-4")	480 (19)	1.14 m (3'-9")	1.293 m (4'-3")	5.23 m (17'-1 3/4")	3.45 m (11'-4")	1.43 m (4'-8 1/4")	914 (36)	2.57 m (8'-5 1/4")	2.66 m (8'-8 1/2")	100 (4)	30 (1 1/4)	45°	4.3 (5.6)	1.49 m (5'-2")	1.36 m (4'-5")	3.5 m (11'-5")	6.35 m (21'-0")	1.36 m (4'-5")	1.86 m (6'-1")	72	153 (340)
	DS 900-2 (DS 36-2)	900 (36)	1.52 m (5'-0")	560 (22)	1.32 m (4'-4")	1.583 m (5'-2 1/4")	6.08 m (19'-11 3/4")	3.97 m (13'-0 3/4")	1.65 m (5'-5")	1.119 m (3'-8")	3. m (9'-10 1/4")	3.08 m (10'-1 1/2")	100 (4)	30 (1 1/4)	45°	5.7 (7.4)	1.71 m (5'-11")	1.65 m (5'-5")	4.02 m (13'-2")	7.39 m (24'-6")	1.65 m (5'-5")	2.16 m (7'-1")	82	203 (450)
50°	DS 375-2 (DS 15-2)	375 (15)	960 (38)	260 (10)	740 (29)	751 (29 1/2)	3.93 m (12'-11 1/2")	2.81 m (9'-3")	1.03 m (3'-4 1/2")	483 (19)	1.92 m (6'-4")	2.01 m (6'-7 1/2")	110 (4 1/4)	30 (1)	40°	2.4 (3.1)	1.07 m (3'-9")	822 (32)	2.81 m (9'-4")	4.7 m (15'-9")	822 (32)	1.32 m (4'-4")	54	77 (170)
	DS 450-2 (DS 18-2)	450 (18)	960 (38)	330 (13)	810 (32)	870 (34 1/4)	4.05 m (13'-4 1/4")	2.81 m (9'-3")	1.03 m (3'-4 1/2")	559 (22)	1.98 m (6'-6 1/4")	2.07 m (6'-10")	110 (4 1/4)	30 (1)	40°	2.6 (3.4)	1.1 m (3'-8")	939 (37)	2.88 m (9'-3")	4.92 m (16'-0")	939 (37)	1.45 m (4'-9")	54	86 (190)
	DS 600-2 (DS 24-2)	600 (24)	1.16 m (3'-10")	410 (16)	990 (39)	1.185 m (3'-10 3/4")	4.99 m (16'-5 1/2")	3.39 m (11'-2 1/2")	1.24 m (4'-1")	762 (30)	2.45 m (8'-1")	2.54 m (8'-4 1/2")	110 (4 1/4)	30 (1)	40°	3.7 (4.8)	1.3 m (4'-6")	1.26 m (4'-1")	3.44 m (11'-2")	6.0 m (19'-9")	1.26 m (4'-1")	1.75 m (5'-9")	68	126 (280)
	DS 750-2 (DS 30-2)	750 (30)	1.32 m (4'-4")	480 (19)	1.14 m (3'-9")	1.422 m (4'-8")	5.72 m (18'-9 1/2")	3.86 m (12'-8")	1.41 m (4'-7 1/4")	914 (36)	2.82 m (9'-3")	2.91 m (9'-6 1/2")	110 (4 1/4)	30 (1)	40°	4.7 (6.2)	1.47 m (5'-1")	1.49 m (4'-10")	3.91 m (12'-9")	6.87 m (22'-9")	1.49 m (4'-10")	1.98 m (6'-6")	78	167 (370)
	DS 900-2 (DS 36-2)	900 (36)	1.52 m (5'-0")	560 (22)	1.32 m (4'-4")	1.741 m (5'-8 1/2")	6.67 m (21'-10 3/4")	4.45 m (14'-7 1/2")	1.62 m (5'-3 3/4")	1.119 m (3'-8")	3.29 m (10'-9 1/2")	3.38 m (11'-1 1/4")	110 (4 1/4)	30 (1)	40°	6.2 (8.1)	1.69 m (5'-10")	1.81 m (5'-11")	4.5 m (14'-9")	8.0 m (26'-6")	1.81 m (5'-11")	2.31 m (7'-7")	90	221 (490)
55°	DS 375-2 (DS 15-2)	375 (15)	960 (38)	260 (10)	740 (29)	842 (33)	4.38 m (14'-5")	3.2 m (10'-6 1/4")	1.01 m (3'-4")	483 (19)	2.14 m (7'-0 1/2")	2.24 m (7'-4 1/2")	110 (4 1/2)	30 (1)	35°	2.6 (3.4)	1.06 m (3'-8")	914 (36)	3.18 m (10'-7")	5.17 m (17'-3")	914 (36)	1.42 m (4'-8")	60	81 (180)
	DS 450-2 (DS 18-2)	450 (18)	960 (38)	330 (13)	810 (32)	975 (38 1/4)	4.38 m (14'-10 1/4")	3.2 m (10'-6 1/4")	1.01 m (3'-4")	559 (22)	2.21 m (7'-3 1/4")	2.3 m (7'-7")	110 (4 1/2)	30 (1)	35°	2.8 (3.7)	1.08 m (3'-9")	1.05 m (3'-5")	3.27 m (10'-7")	5.4 m (17'-9")	1.05 m (3'-5")	1.55 m (5'-1")	60	95 (210)
	DS 600-2 (DS 24-2)	600 (24)	1.16 m (3'-10")	410 (16)	990 (39)	1.329 m (4'-4 1/4")	5.56 m (18'-4 1/4")	3.86 m (12'-9")	1.22 m (4'-0 1/4")	762 (30)	2.73 m (9'-0 1/4")	2.83 m (9'-4")	110 (4 1/2)	30 (1)	35°	4.1 (5.4)	1.29 m (4'-5")	1.4 m (4'-7")	3.91 m (12'-9")	6.6 m (21'-9")	1.4 m (4'-7")	1.91 m (6'-3")	74	135 (300)
	DS 750-2 (DS 30-2)	750 (30)	1.32 m (4'-4")	480 (19)	1.14 m (3'-9")	1.594 m (5'-2 3/4")	6.39 m (20'-11 1/2")	4.39 m (14'-5")	1.39 m (4'-6 1/2")	914 (36)	3.15 m (10'-3 3/4")	3.24 m (10'-7 3/4")	110 (4 1/2)	30 (1)	35°	5.3 (6.9)	1.45 m (5'-1")	1.66 m (5'-6")	4.44 m (14'-6")	7.56 m (25'-0")	1.66 m (5'-6")	2.19 m (7'-2")	88	189 (420)
	DS 900-2 (DS 36-2)	900 (36)	1.52 m (5'-0")	560 (22)	1.32 m (4'-4")	1.951 m (6'-4 3/4")	7.44 m (24'-5 1/2")	5.06 m (16'-7 1/2")	1.61 m (5'-3")	1.119 m (3'-8")	3.67 m (12'-0 3/4")	3.77 m (12'-4 3/4")	110 (4 1/2)	30 (1)	35°	7.0 (9.1)	1.67 m (5'-10")	2.02 m (6'-7")	5.11 m (16'-7")	8.8 m (29'-0")	2.02 m (6'-7")	2.52 m (8'-3")	102	248 (550)
60°	DS 375-2 (DS 15-2)	375 (15)	960 (38)	260 (10)	740 (29)	966 (38)	4.99 m (16'-5 1/4")	3.71 m (12'-2 3/4")	1. m (3'-3 1/4")	483 (19)	2.44 m (8'-0 1/2")	2.55 m (8'-4 3/4")	120 (4 1/2)	20 (0 3/4)	30°	3.0 (3.9)	1.05 m (3'-8")	1.04 m (3'-5")	3.7 m (12'-2")	5.79 m (19'-3")	1.04 m (3'-5")	1.55 m (5'-1")	64	90 (200)
	DS 450-2 (DS 18-2)	450 (18)	960 (38)	330 (13)	810 (32)	1.118 m (3'-8")	5.15 m (16'-11 1/4")	3.71 m (12'-2 3/4")	1. m (3'-3 1/4")	559 (22)	2.52 m (8'-3 1/2")	2.63 m (8'-7 3/4")	120 (4 1/2)	20 (0 3/4)	30°	3.2 (4.2)	1.07 m (3'-8")	1.19 m (3'-11")	3.8 m (12'-2")	6.06 m (19'-9")	1.19 m (3'-11")	1.70 m (5'-7")	70	108 (240)
	DS 600-2 (DS 24-2)	600 (24)	1.16 m (3'-10")	410 (16)	990 (39)	1.524 m (5'-0")	6.35 m (20'-11 1/4")	4.48 m (14'-9 3/4")	1.2 m (3'-11 3/4")	762 (30)	3.12 m (10'-3 1/2")	3.23 m (10'-7 3/4")	120 (4 1/2)	20 (0 3/4)	30°	4.7 (6.1)	1.27 m (4'-5")	1.6 m (5'-3")	4.54 m (14'-10")	7.41 m (24'-6")	1.6 m (5'-3")	2.11 m (6'-11")	86	158 (350)
	DS 750-2 (DS 30-2)	750 (30)	1.32 m (4'-4")	480 (19)	1.14 m (3'-9")	1.828 m (6'-0")	7.29 m (23'-11 1/4")	5.1 m (16'-9")	1.37 m (4'-5 3/4")	914 (36)	3.59 m (11'-9 1/2")	3.7 m (12'-1 3/4")	120 (4 1/2)	20 (0 3/4)	30°	6.0 (7.9)	1.44 m (5'-0")	1.9 m (6'-3")	5.16 m (16'-9")	8.5 m (28'-0")	1.9 m (6'-3")	2.41 m (7'-11")	100	212 (470)
	DS 900-2 (DS 36-2)	900 (36)	1.52 m (5'-0")	560 (22)	1.32 m (4'-4")	2.238 m (7'-4")	8.51 m (27'-11 1/4")	5.88 m (19'-3 3/4")	1.57 m (5'-2")	1.119 m (3'-8")	4.2 m (13'-9 1/2")	4.31 m (14'-1 3/4")	120 (4 1/2)	20 (0 3/4)	30°	8.0 (10.4)	1.65 m (5'-10")	2.31 m (7'-7")	5.94 m (19'-4")	9.89 m (32'-9")	2.31 m (7'-7")	2.82 m (9'-3")	114	279 (620)

All dimensions are in millimeters (inches) unless otherwise shown.

All slope ratios are expressed as units of vertical displacement to units of horizontal displacement (V:H).

Illinois Department of Transportation

APPROVED January 1, 2007
Ralph E. Anderson
ENGINEER OF BRIDGES AND STRUCTURES

APPROVED January 1, 2007
Michael L. Hine
ENGINEER OF DESIGN AND ENVIRONMENT

ISSUED 1-1-97

REINFORCED CONCRETE END SECTIONS
FOR PIPE CULVERTS
375 mm (15") THRU 900 mm (36") DIA.
SKEWED WITH ROADWAY
(Sheet 5 of 5)

STANDARD 542201-01