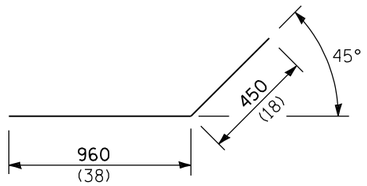

Bar h_2

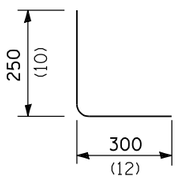

Bar L

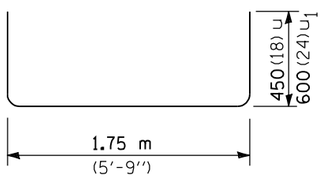

Bar u & u_1

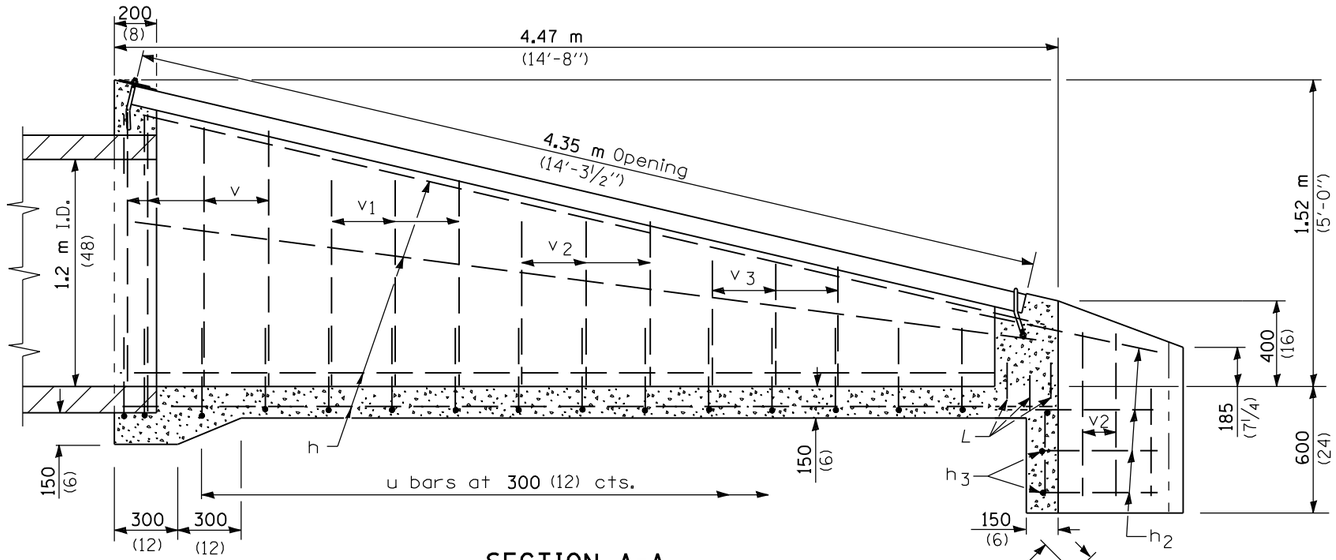

SECTION A-A

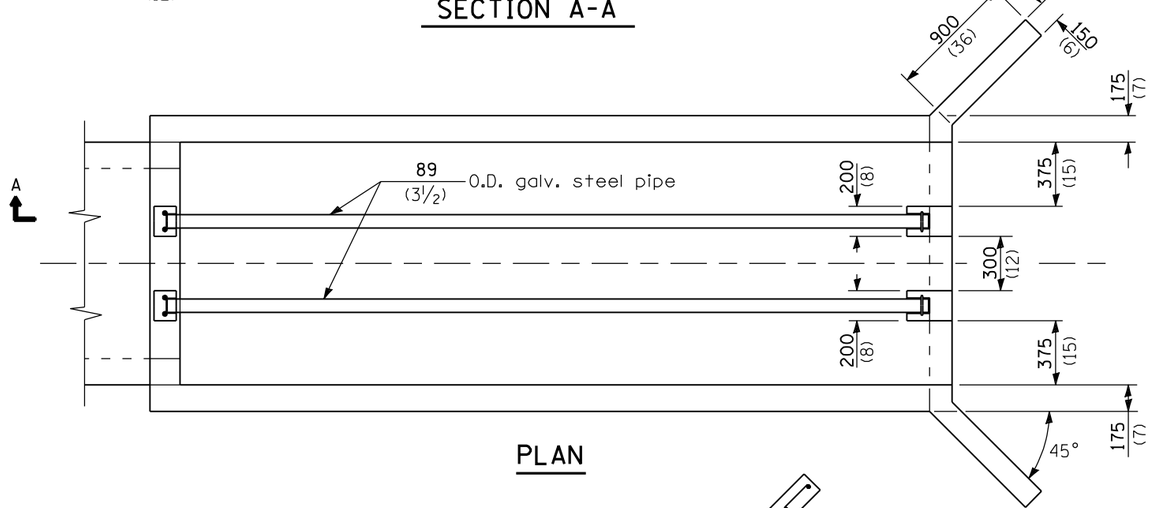

PLAN

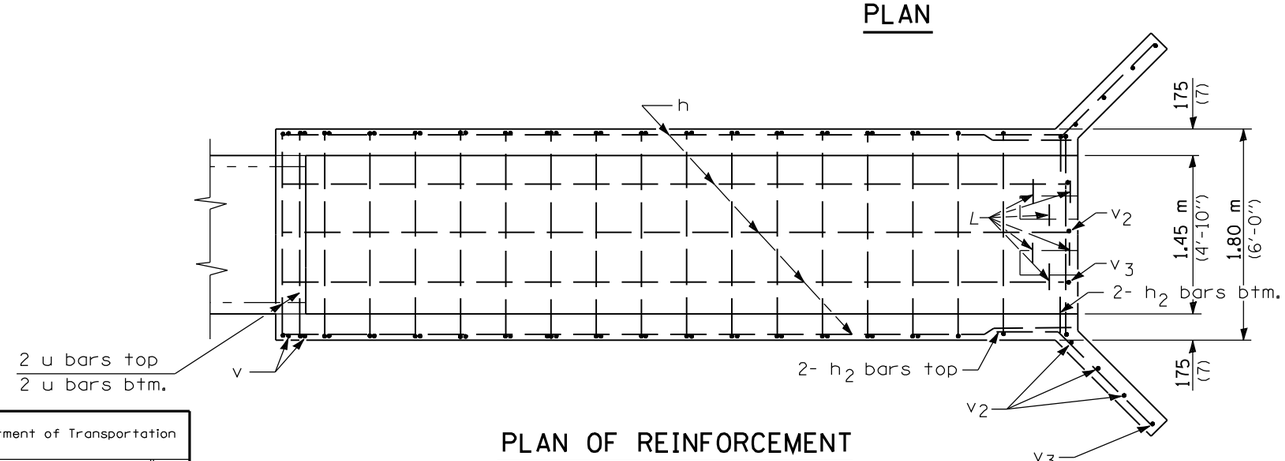

PLAN OF REINFORCEMENT

Material required for one inlet box

Bar	Qty.	Size	Length
h	11	No. 13 (No. 4)	4.40 m (14'-5")
h_2	8	No. 13 (No. 4)	1.40 m (4'-8")
h_3	2	No. 13 (No. 4)	1.70 m (5'-6")
L	6	No. 13 (No. 4)	550 (22)
u	16	No. 13 (No. 4)	2.67 m (8'-9")
u_1	2	No. 13 (No. 4)	2.97 m (9'-9")
v	8	No. 13 (No. 4)	1.30 m (4'-3")
v_1	6	No. 13 (No. 4)	1.07 m (3'-6")
v_2	13	No. 13 (No. 4)	840 (33)
v_3	10	No. 13 (No. 4)	530 (21)
Concrete Cast-in-place or Precast		m^3 (cu. yds.)	3.80 (5.0)
Reinf. Bars		kg (lbs.)	147 (324)
Galv. Steel Pipe		89 O.D. (3 1/2)	2 at 4.35 m 2 at (14'-3 1/4")

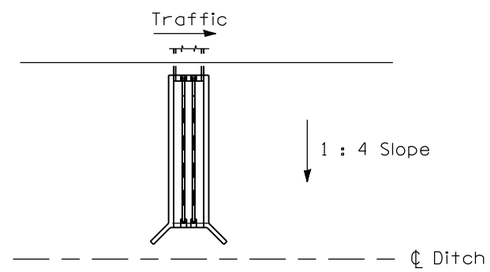

Sketch showing location and direction of box in relation to ℄ of ditch.

GENERAL NOTES

All slope ratios are expressed as units of vertical displacement to units of horizontal displacement (V:H).

All dimensions are in millimeters (inches) unless otherwise shown.

Illinois Department of Transportation

PASSED January 1, 2007
ENGINEER OF POLICY AND PROCEDURES
APPROVED January 1, 2007
ENGINEER OF DESIGN AND ENVIRONMENT

ISSUED 1-1-97

DATE	REVISIONS
1-1-07	Soft converted metric rebars.
1-1-97	Renum. Standard 2332-6.

INLET BOX TYPE 1200 (48) A

(Sheet 1 of 2)

STANDARD 542541-01

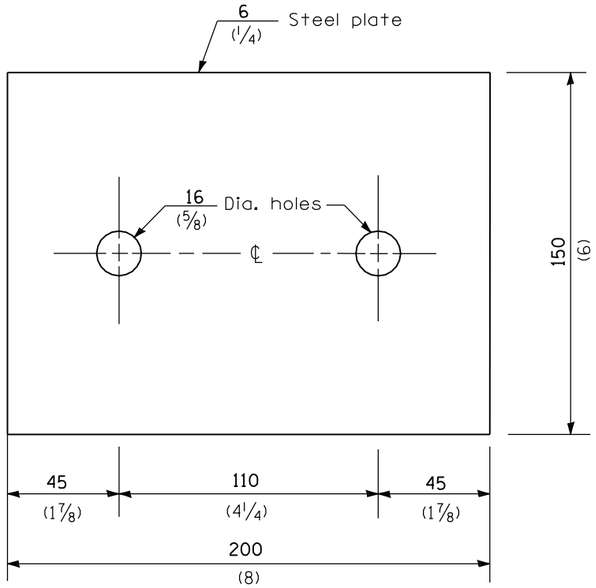

TOP ANCHOR PLATE

(2 - required)

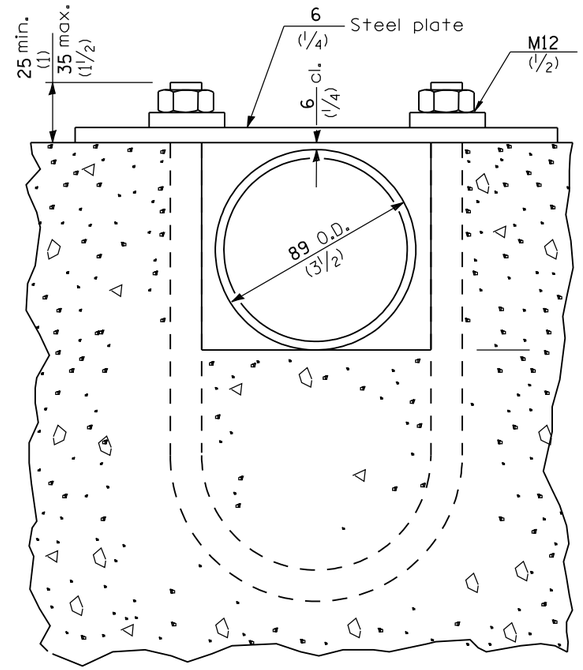

SECTION B-B

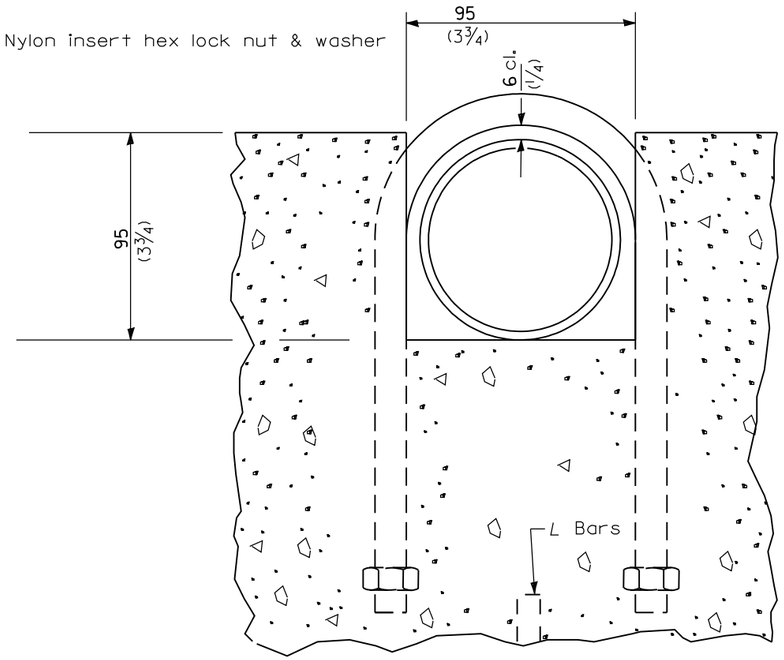

SECTION C-C

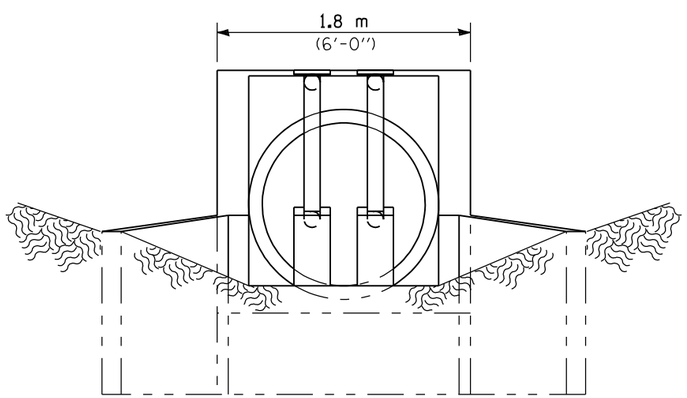

END VIEW

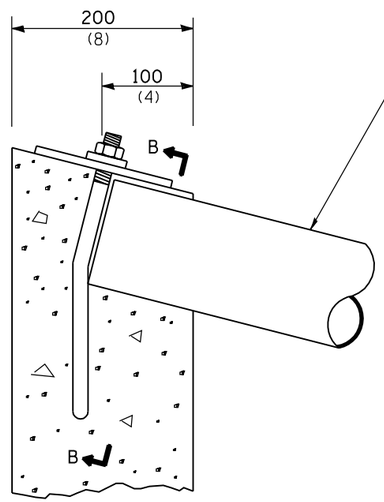

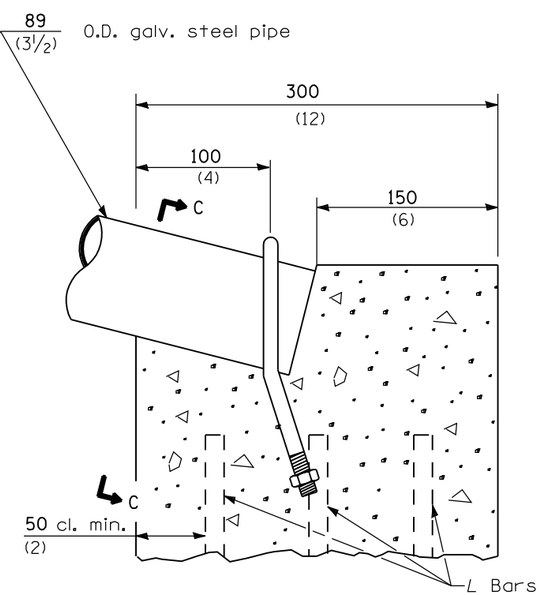

DETAIL AT BLOCKOUTS

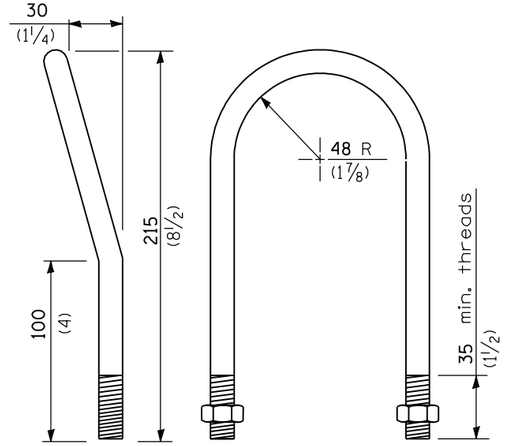

M12 (1/2) U BOLT

(4 - required)

All dimensions are in millimeters (inches) unless otherwise shown.

Illinois Department of Transportation

PASSED January 1, 2007

ENGINEER OF POLICY AND PROCEDURES

APPROVED January 1, 2007

ENGINEER OF DESIGN AND ENVIRONMENT

ISSUED 1-1-97

INLET BOX TYPE 1200 (48) A

(Sheet 2 of 2)

STANDARD 542541-01