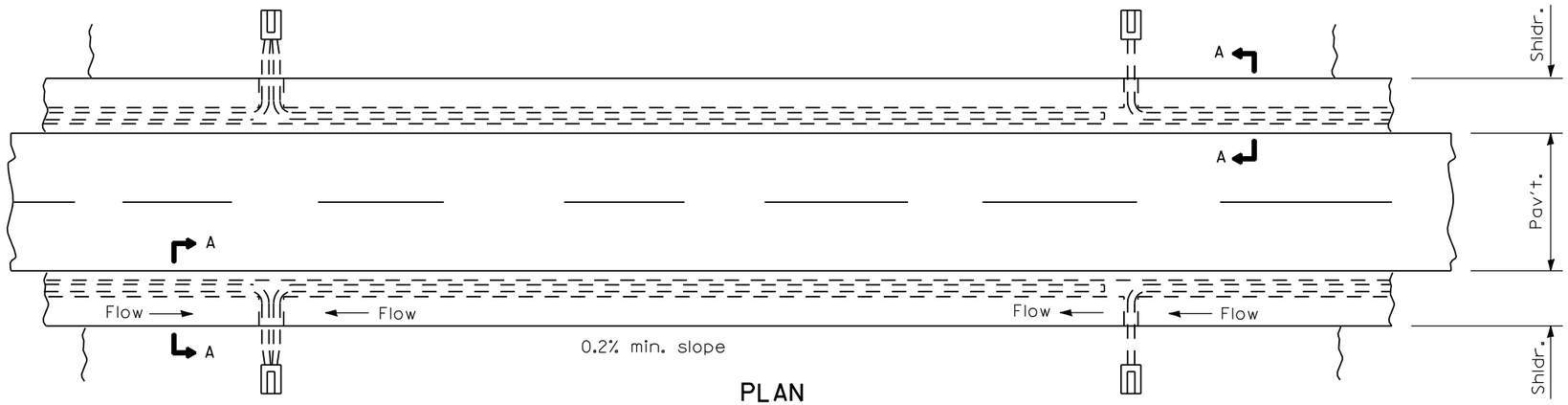

PLAN

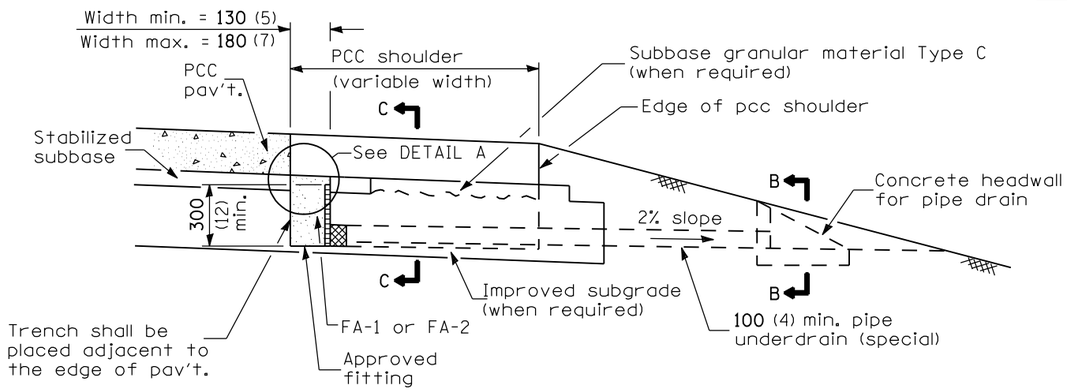

SECTION A-A
(PCC Shoulder)

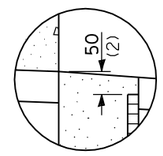

DETAIL A

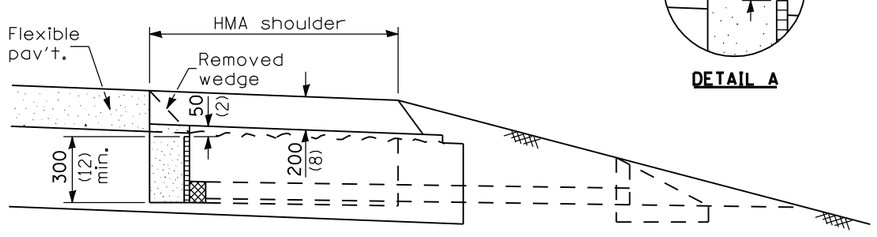

SECTION A-A
(HMA Shoulder)

(Dimensions and notes not shown shall be as shown in the above Section A-A)

NEW CONSTRUCTION
(TRENCH FOR DRAINAGE MAT UNDERDRAIN OPTION)

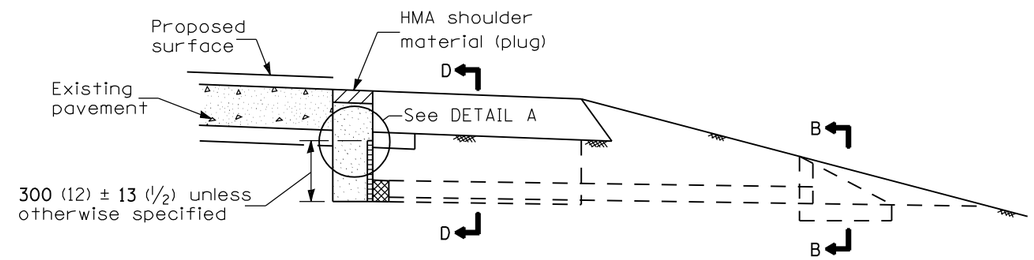

SECTION A-A

EXISTING CONSTRUCTION
(TRENCH FOR DRAINAGE MAT UNDERDRAIN OPTION)

(Except as noted or shown, dimensions and notes specified for Existing Construction are the same as those of New Construction)

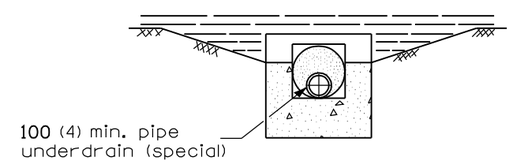

SECTION B-B

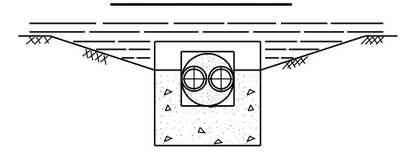

SECTION B-B
(Sag locations)

GENERAL NOTES

See Standard 601101 for details of concrete headwall.

See Standards 482001, 482006 and 483001 for details of shoulders not shown.

The 600 mm (24") radius on the drainage fitting is only a minimum. Larger radii meeting the approval of the Engineer maybe substituted.

All dimensions are in millimeters (inches) unless otherwise shown.

Illinois Department of Transportation

PASSED January 1, 2007
ENGINEER OF POLICY AND PROCEDURES
APPROVED January 1, 2007
ENGINEER OF DESIGN AND ENVIRONMENT

ISSUED 1-1-97

DATE	REVISIONS
1-1-07	Switched to Hot-Mix
	Asphalt (HMA)
	terminology.
1-1-97	Renum. Standard 2327-12.
	Rev. loc. of mat u.d.
	Decr. depth of pipe u.d.

SUB-SURFACE DRAINS

(Sheet 1 of 2)

STANDARD 601001-01

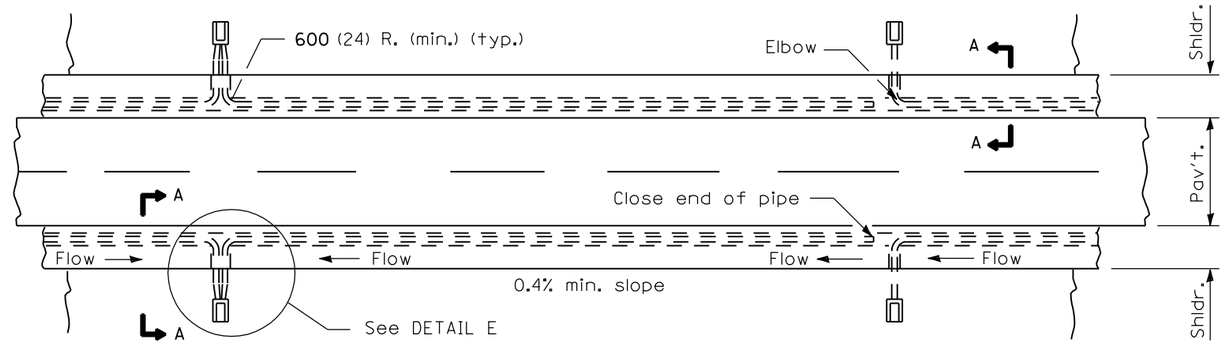

PLAN

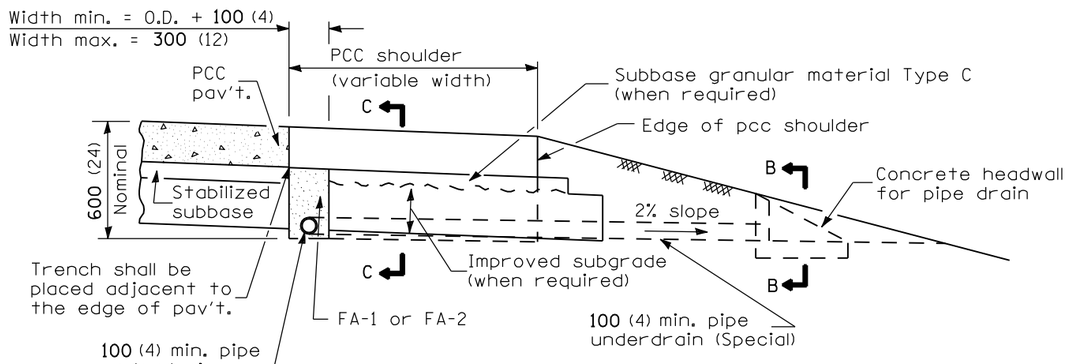

SECTION A-A

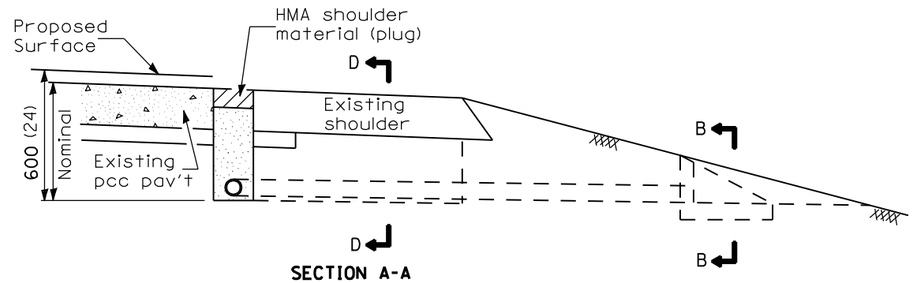

SECTION A-A

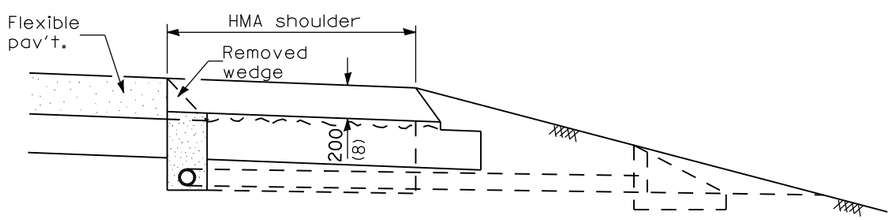

SECTION A-A

(Dimensions and notes not shown shall be as shown in the above Section A-A)

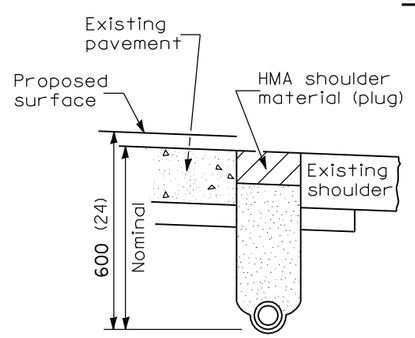

TRENCH FOR CORRUGATED POLYETHYLENE TUBING ALTERNATE

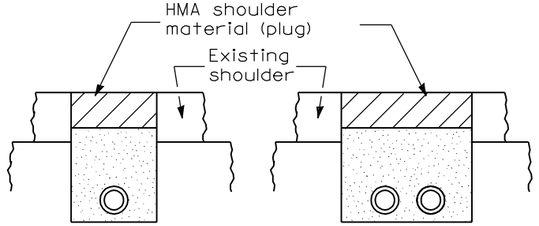

SECTION D-D

SECTION D-D
(Sag Locations)

EXISTING CONSTRUCTION

(Except as noted or shown, dimensions and notes specified for Existing Construction are the same as those of New Construction)

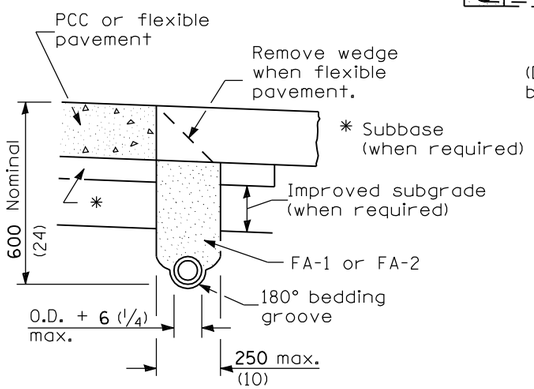

TRENCH FOR CORRUGATED POLYETHYLENE TUBING ALTERNATE

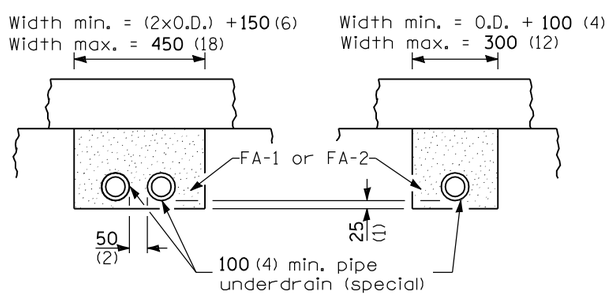

SECTION C-C
(Sag locations)

SECTION C-C

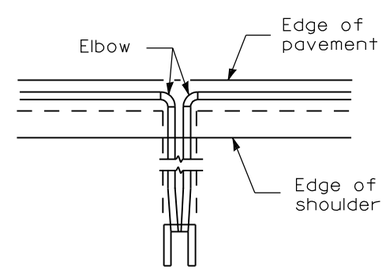

DETAIL E

All dimensions are in millimeters (inches) unless otherwise shown.

NEW CONSTRUCTION

Illinois Department of Transportation

PASSED January 1, 2007
ENGINEER OF POLICY AND PROCEDURES
APPROVED January 1, 2007
ENGINEER OF DESIGN AND ENVIRONMENT

ISSUED 1-1-97

SUB-SURFACE DRAINS

(Sheet 2 of 2)

STANDARD 601001-01