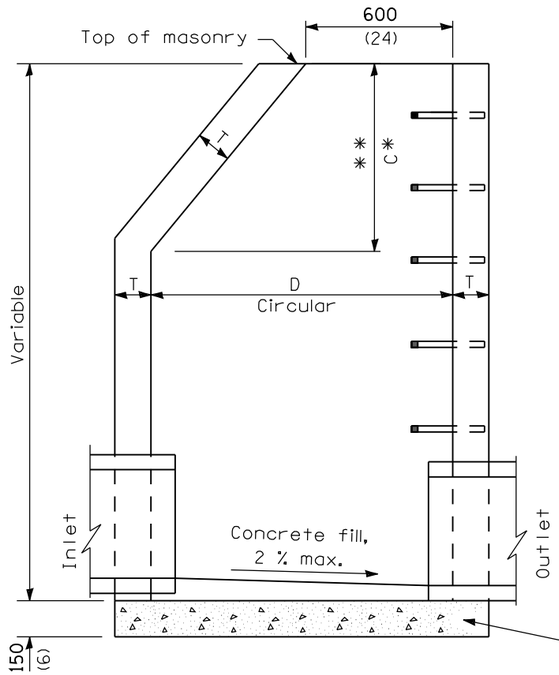

ELEVATION - ECCENTRIC

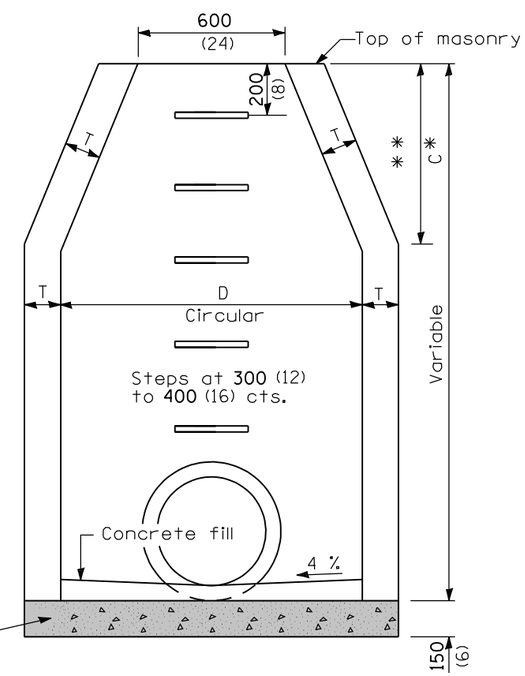

ELEVATION - CONCENTRIC

ALTERNATE MATERIALS FOR WALLS	D	C	T (min.)
Concrete Masonry Unit	1.2 m (4'-0") 1.5 m (5'-0")	750 (30) 1.15 m (3'-9")	125 (5) 125 (5)
Brick Masonry	1.2 m (4'-0") 1.5 m (5'-0")	750 (30) 1.15 m (3'-9")	200 (8) 200 (8)
Precast Reinforced Concrete Section	1.2 m (4'-0") 1.5 m (5'-0")	750 (30) 1.15 m (3'-9")	100 (4) 125 (5)
Cast-in-place Concrete	1.2 m (4'-0") 1.5 m (5'-0")	750 (30) 1.15 m (3'-9")	150 (6) 150 (6)

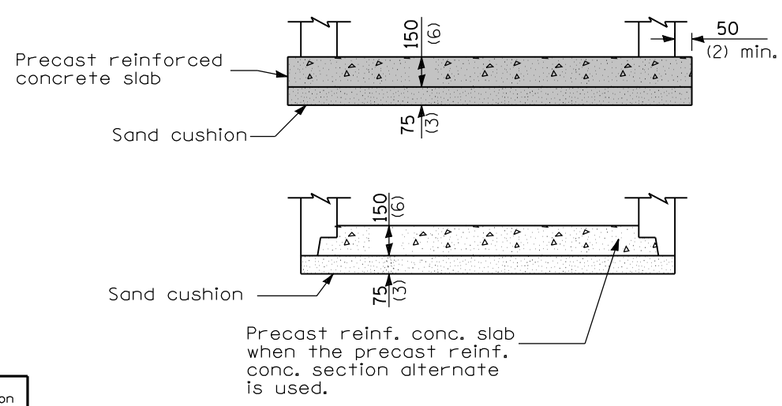

ALTERNATE BOTTOM SLAB

GENERAL NOTES

See Standard 602701 for details of steps.

* Dimension "C" for Precast Reinforced Concrete Sections may vary from the dimension given to plus 150 mm (6").

** See Standard 602601 for Optional Precast Reinforced Concrete Flat Slab Top.

All dimensions are in millimeters (inches) unless otherwise shown.

Illinois Department of Transportation

PASSED April 1, 2006
ENGINEER OF POLICY AND PROCEDURES

APPROVED April 1, 2006
ENGINEER OF DESIGN AND ENVIRONMENT

ISSUED 1-1-97

DATE	REVISIONS
4-1-06	Revised detail for
	concrete fill in
	elevation vews.
1-1-97	Renum. Standard 1527-10.

MANHOLE TYPE A

STANDARD 602401-01