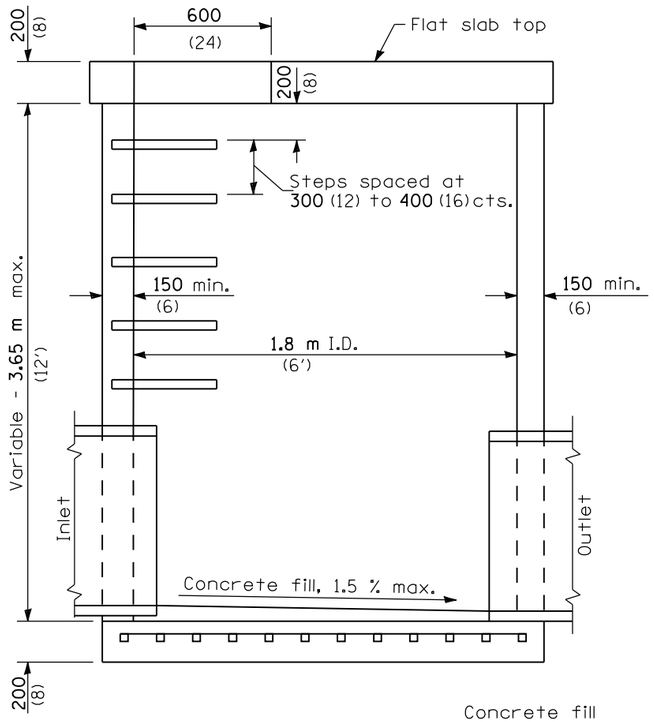

ELEVATION

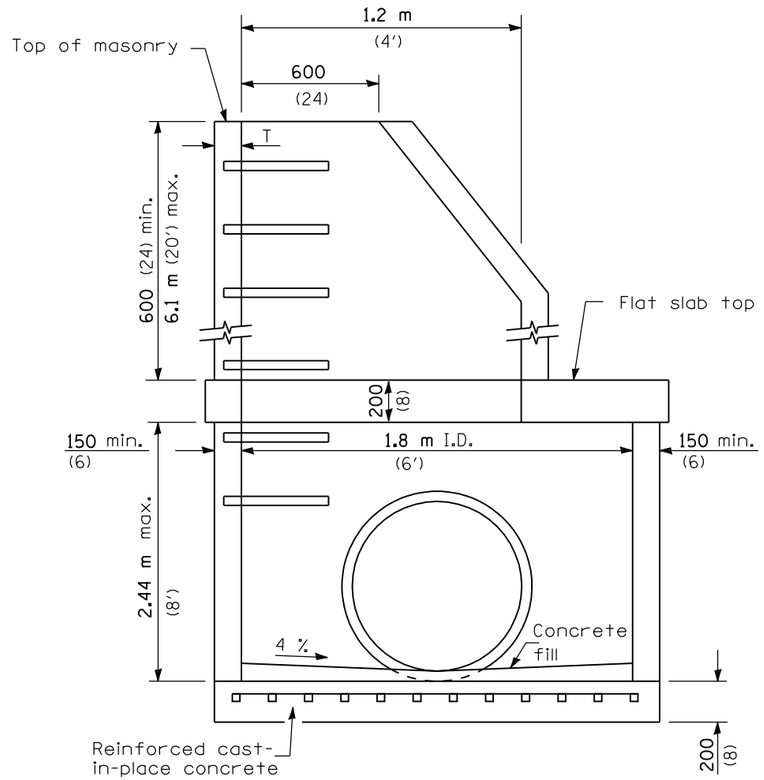

ELEVATION

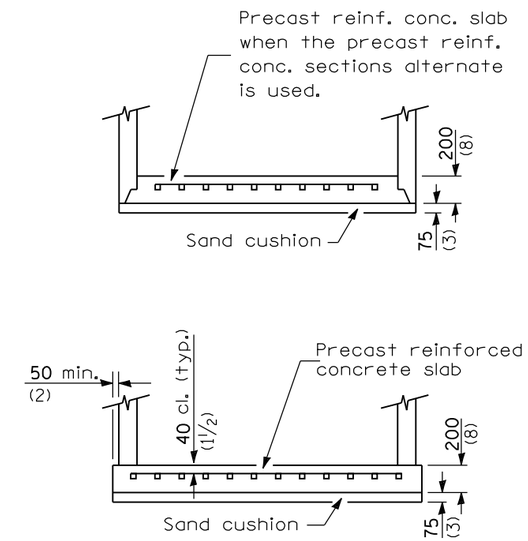

ALTERNATE BOTTOM SLABS

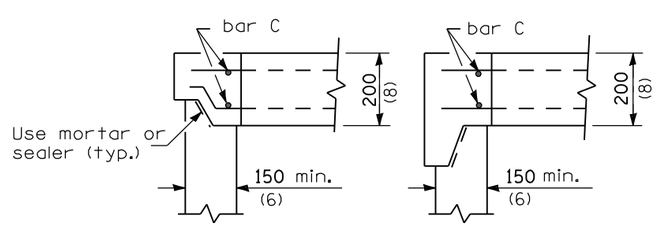

ALTERNATE JOINT CONFIGURATIONS

ALTERNATE MATERIALS FOR WALLS	T (min)
Concrete Masonry Units	125 (5)
Precast Reinforced Concrete Sections	100 (4)
Cast-in-Place Concrete	150 (6)

GENERAL NOTES

Joint configuration and dimensions of flat slab top shall match and fit the riser joint detail.

Lifting devices shall be approved by the Engineer.

Bottom slabs shall be reinforced with a minimum of 975 mm^2/m (0.46 sq. in./ft.) in both directions.

See Standard 602701 for details of manhole steps.

All dimensions are in millimeters (inches) unless otherwise shown.

Illinois Department of Transportation

PASSED April 1, 2006
ENGINEER OF POLICY AND PROCEDURES
APPROVED April 1, 2006
ENGINEER OF DESIGN AND ENVIRONMENT

ISSUED 1-1-97

DATE	REVISIONS
4-1-06	Revised detail for
	concrete fill in
	elevation views.
1-1-03	Added general note for
	reinforcement.

MANHOLE TYPE A 1.8 m (6') DIAMETER

(Sheet 1 of 2)

STANDARD 602406-02

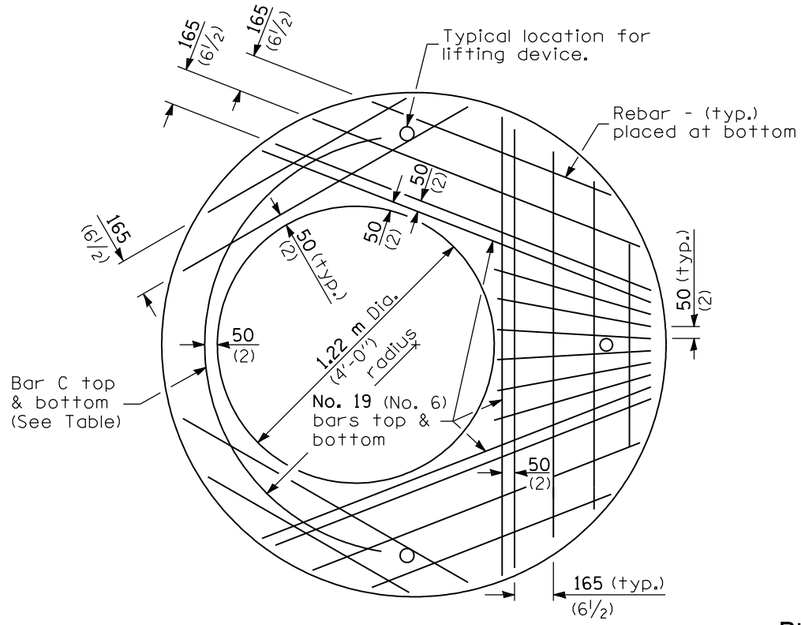

PLAN

Showing Rebar Reinforcement

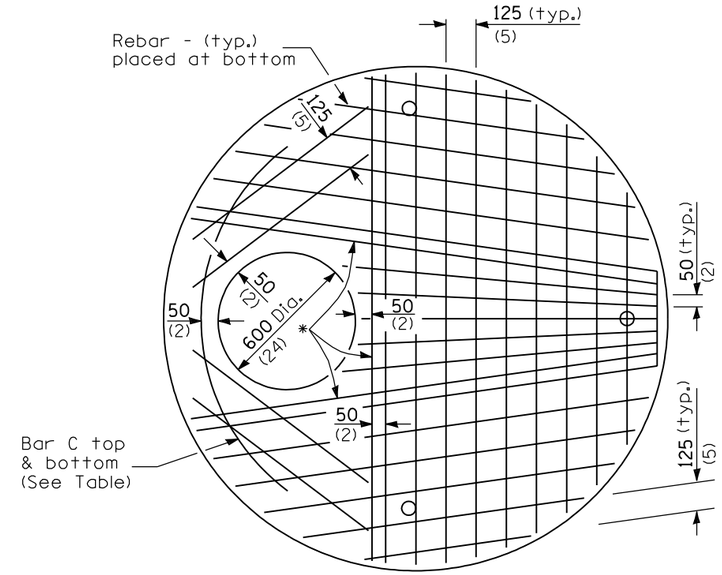

* No. 19 (No. 6) bars top & bottom

Diameter of opening	Thickness	Reinforcement "As" WWF Each direction	Bar Size	No. 13 (No. 4) Bar C	
				Length	Radius
600 (24)	200 (8)	2244 sq. mm/m (1.06) sq. in./ft.	No. 19 (No. 6)	1.83 m (6'-0")	965 (38)
1.2 m (4'-0")	200 (8)	1736 sq. mm/m (0.82) sq. in./ft.	No. 19 (No. 6)	2.74 m (9'-0")	965 (38)

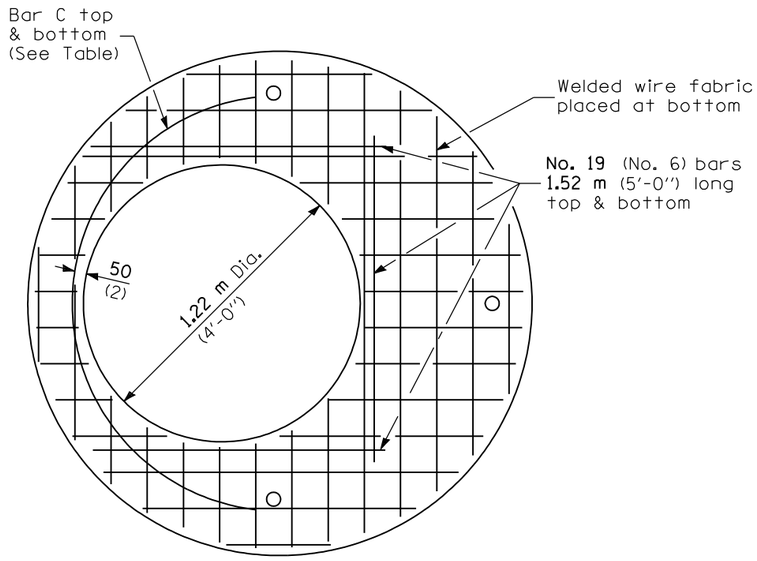

PLAN

Showing Welded Wire Fabric Reinforcement

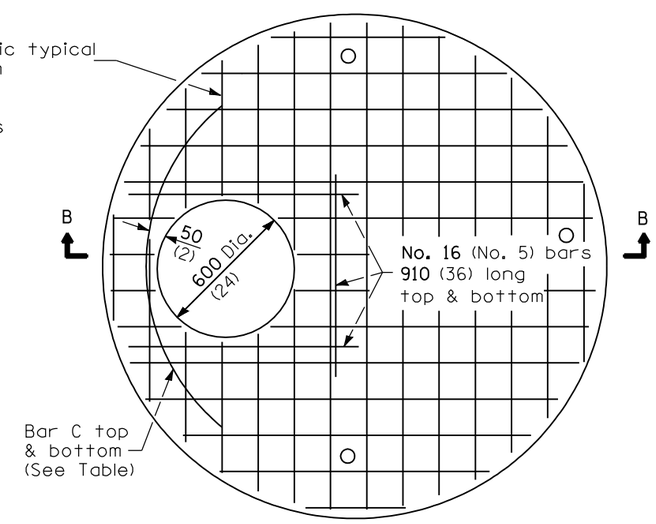

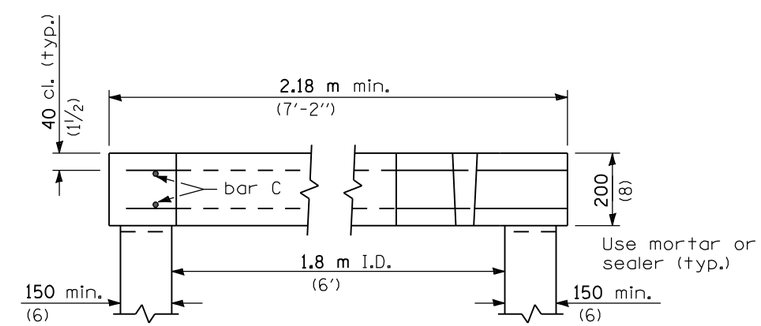

SECTION B-B

All dimensions are in millimeters (inches) unless otherwise shown.

Illinois Department of Transportation

PASSED April 1, 2006
ENGINEER OF POLICY AND PROCEDURES

APPROVED April 1, 2006
ENGINEER OF DESIGN AND ENVIRONMENT

ISSUED 1-1-97

MANHOLE TYPE A 1.8 m (6') DIAMETER

(Sheet 2 of 2)

STANDARD 602406–02