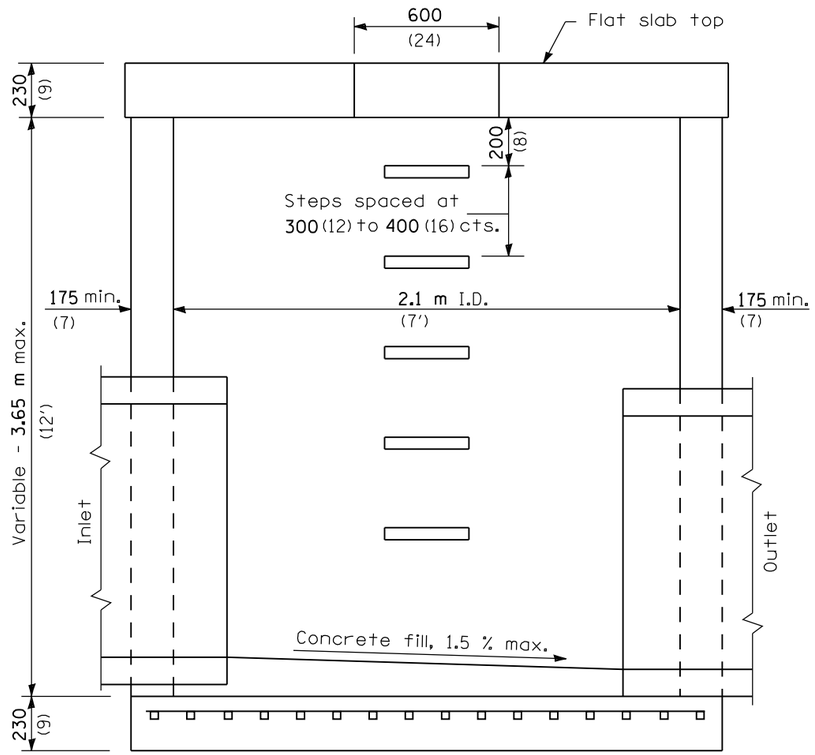

ELEVATION

(With Flat Slab Top Only)

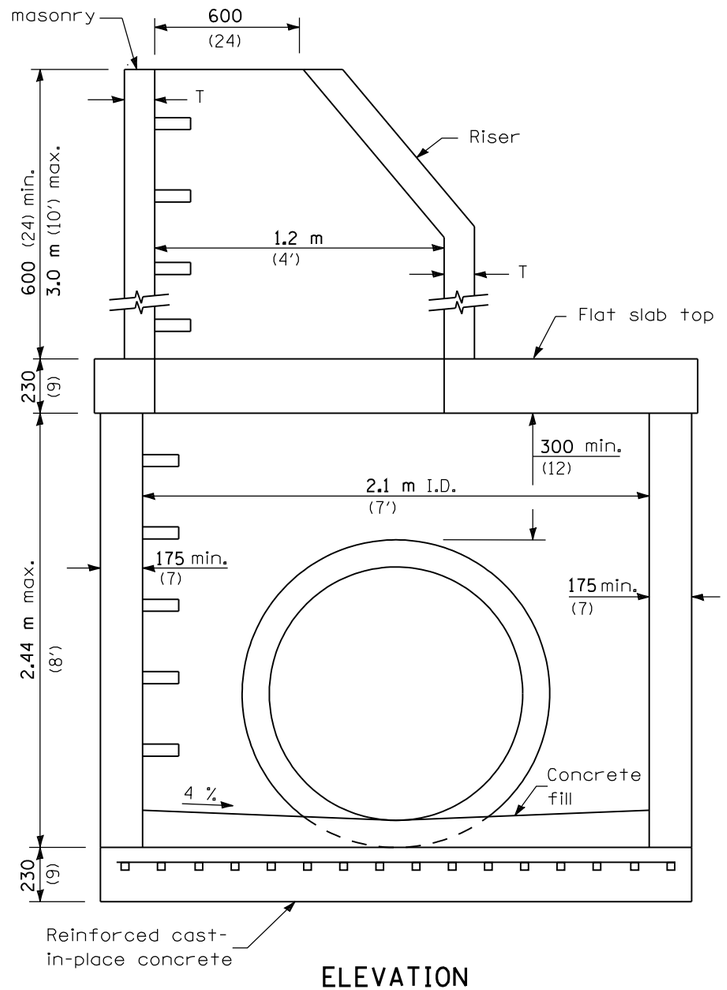

ELEVATION

(With Flat Slab Top and Riser)

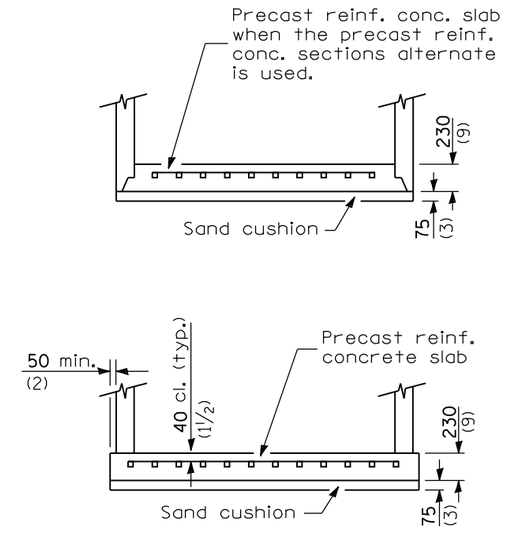

ALTERNATE BOTTOM SLABS

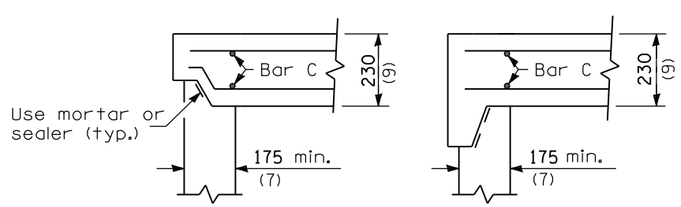

ALTERNATE JOINT CONFIGURATIONS

ALTERNATE MATERIALS FOR RISER WALLS	T (min)
Concrete Masonry Units	125 (5)
Precast Reinforced Concrete Sections	100 (4)
Cast-in-Place Concrete	150 (6)

GENERAL NOTES

Joint configuration and dimensions of flat slab top shall match and fit the riser joint detail.

Lifting devices shall be approved by the Engineer.

Bottom slabs shall be reinforced with a minimum of 1270 sq. mm/m (0.60 sq. in./ft.) in both directions.

See Standard 602701 for details of manhole steps.

All dimensions are in millimeters (inches) unless otherwise shown.

Illinois Department of Transportation

PASSED April 1, 2006
ENGINEER OF POLICY AND PROCEDURES

APPROVED April 1, 2006
ENGINEER OF DESIGN AND ENVIRONMENT

ISSUED 4-1-06

DATE	REVISIONS
4-1-06	New standard.

MANHOLE TYPE A 2.1 m (7') DIAMETER

(Sheet 1 of 2)

STANDARD 602411

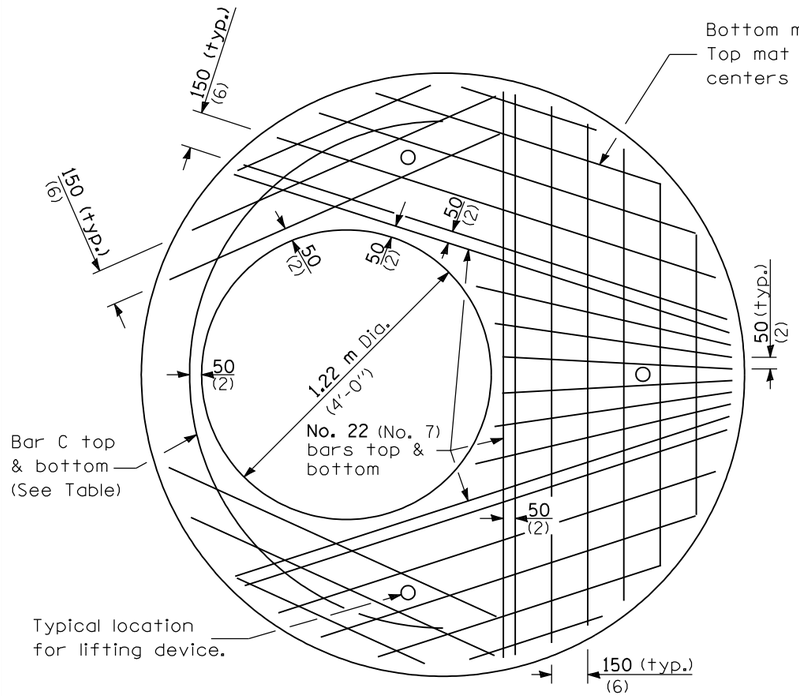

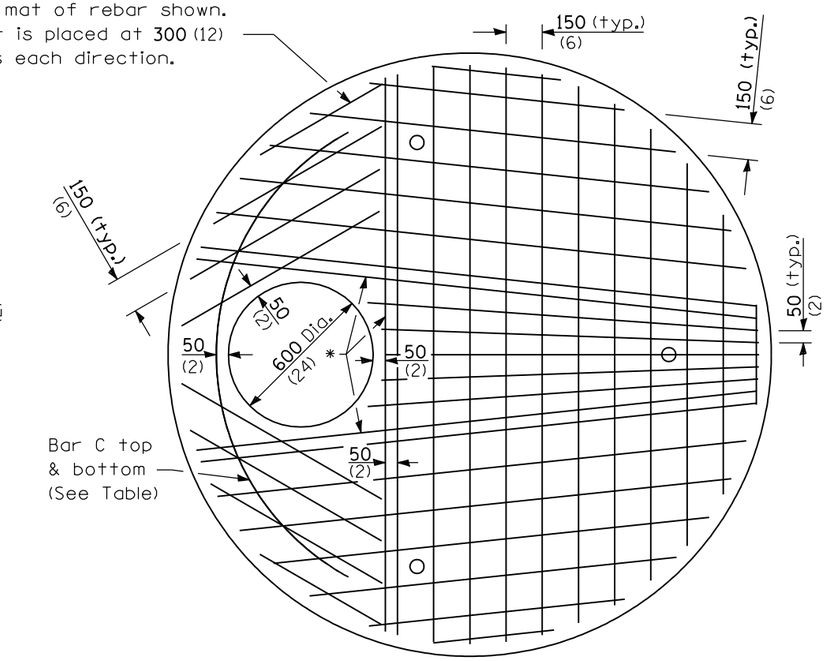

PLAN

Showing Rebar Reinforcement

* No. 25 (No. 8) bars top & bottom

Diameter of opening	Reinforcement Bar Size	Reinforcement "As" WWF each direction	No. 13 (No. 4) Bar C	
			Length	Radius
600 (24)	Bottom mat No. 25 (No. 8)	Bottom mat *** 3325 sq. mm/m (1.57) sq. in./ft.	2.30 m (7'-6")	1.067 m (3'-6")
	Top mat No. 13 (No. 4)	Top mat *** 425 sq. mm/m (0.20) sq. in./ft.		
1.2 m (4'-0")	Bottom mat No. 22 (No. 7)	Bottom mat *** 2540 sq. mm/m (1.20) sq. in./ft.	3.35 m (11'-0")	1.067 m (3'-6")
	Top mat No. 13 (No. 4)	Top mat *** 425 sq. mm/m (0.20) sq. in./ft.		

*** A maximum of two layers of welded wire fabric may be used to satisfy the required "As" for each mat.

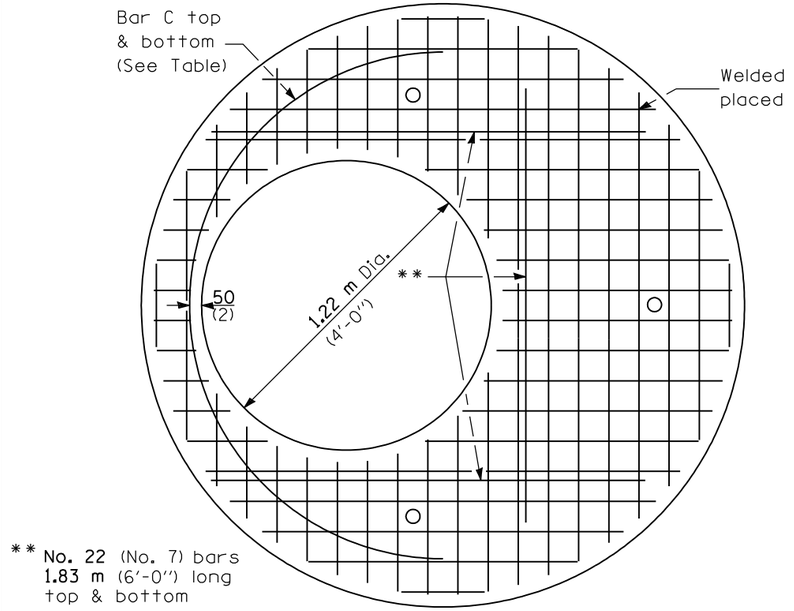

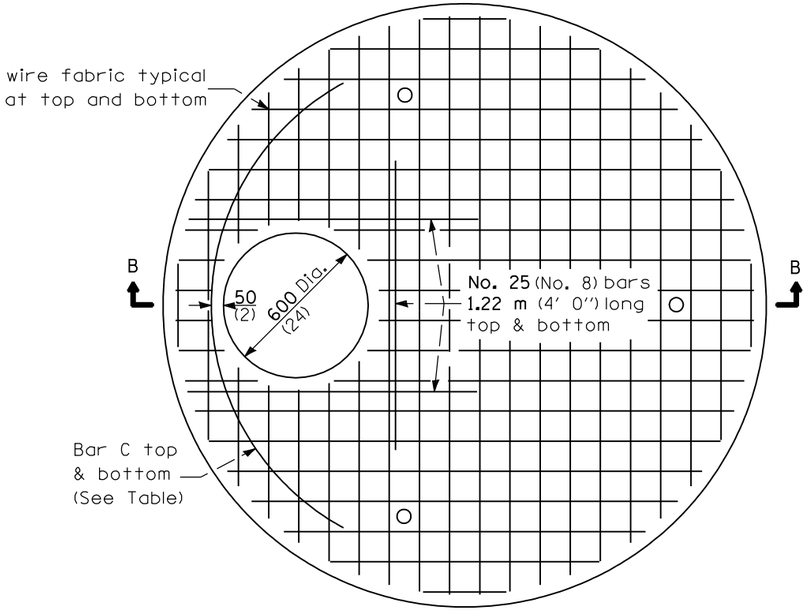

PLAN

Showing Welded Wire Fabric Reinforcement

** No. 22 (No. 7) bars 1.83 m (6'-0") long top & bottom

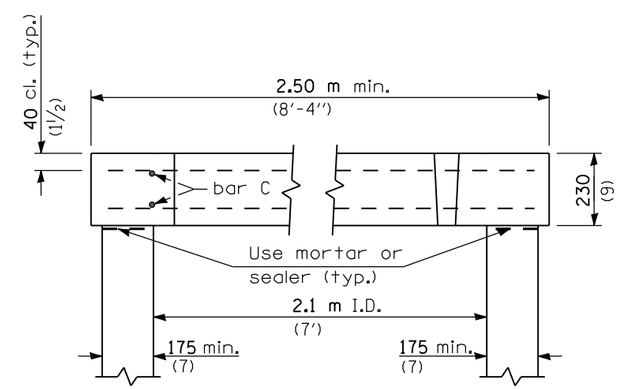

SECTION B-B

(Typical of each top)

All dimensions are in millimeters (inches) unless otherwise shown.

Illinois Department of Transportation

PASSED April 1, 2006

ENGINEER OF POLICY AND PROCEDURES

APPROVED April 1, 2006

ENGINEER OF DESIGN AND ENVIRONMENT

ISSUED 4-1-06

MANHOLE TYPE A 2.1 m (7') DIAMETER

(Sheet 2 of 2)

STANDARD 602411