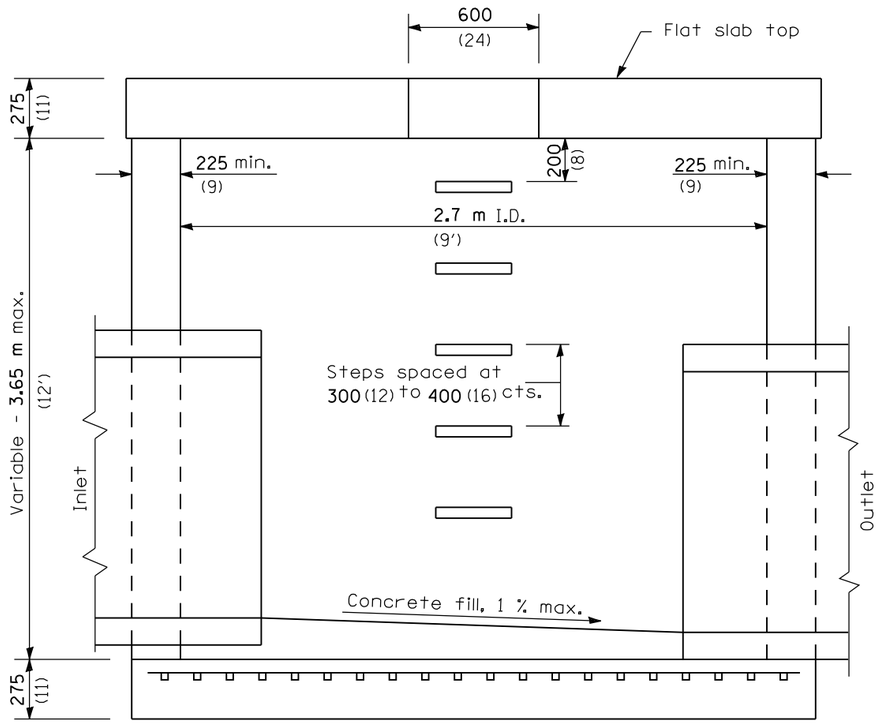

ELEVATION

(With Flat Slab Top Only)

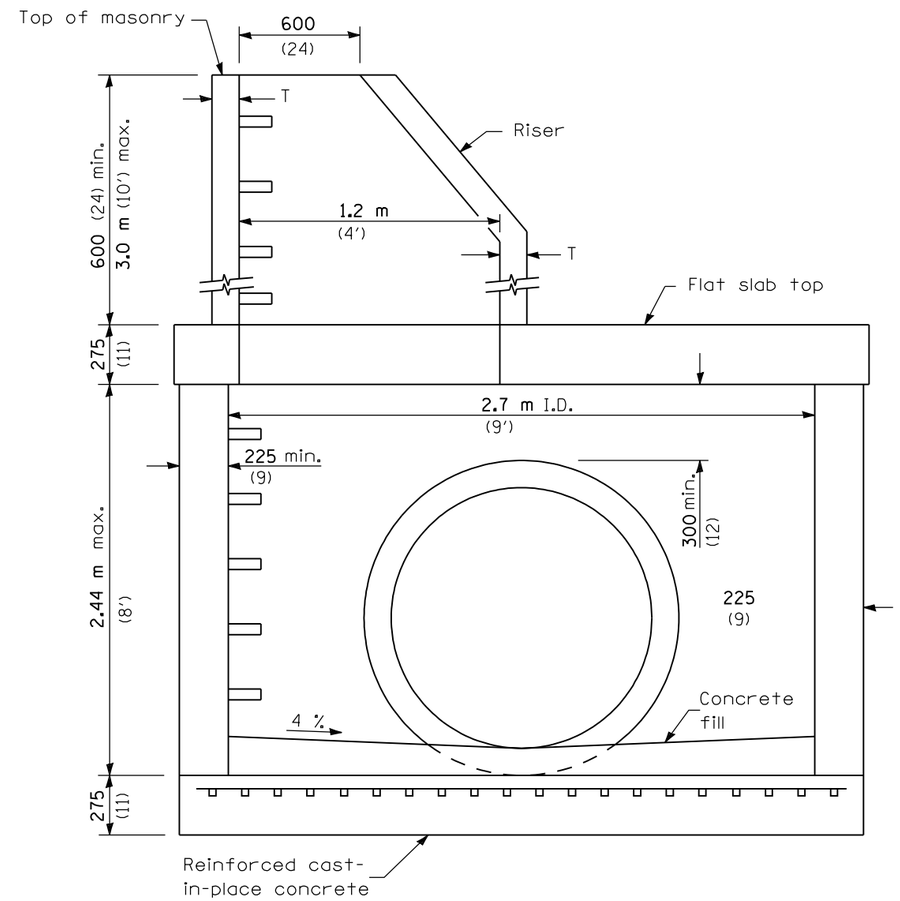

ELEVATION

(With Flat Slab Top and Riser)

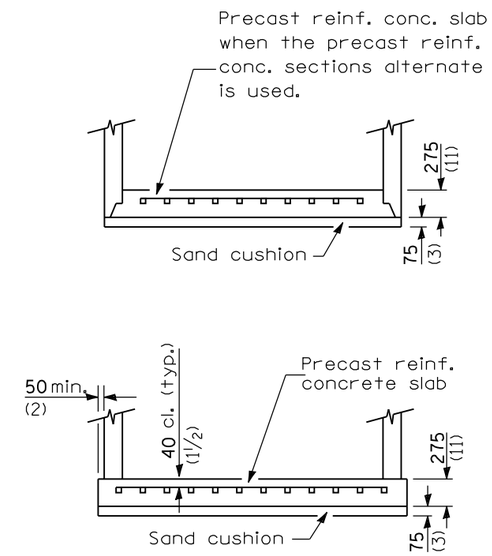

ALTERNATE BOTTOM SLABS

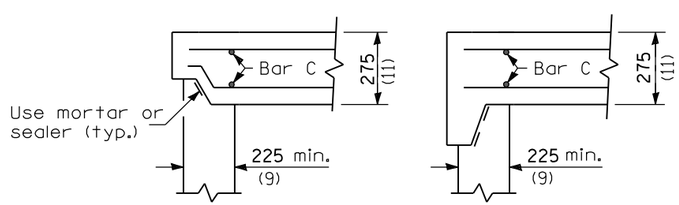

ALTERNATE JOINT CONFIGURATIONS

ALTERNATE MATERIALS FOR RISER WALLS	T (min)
Concrete Masonry Units	125 (5)
Precast Reinforced Concrete Sections	100 (4)
Cast-in-Place Concrete	150 (6)

GENERAL NOTES

Joint configuration and dimensions of flat slab top shall match and fit the riser joint detail.

Lifting devices shall be approved by the Engineer.

Bottom slabs shall be reinforced with a minimum of 1420 sq. mm/m (0.67 sq. in./ft.) in both directions.

See Standard 602701 for details of manhole steps.

All dimensions are in millimeters (inches) unless otherwise shown.

Illinois Department of Transportation

PASSED April 1, 2006
ENGINEER OF POLICY AND PROCEDURES
APPROVED April 1, 2006
ENGINEER OF DESIGN AND ENVIRONMENT

ISSUED 4-1-06

DATE	REVISIONS
4-1-06	New standard.

MANHOLE TYPE A
2.7 m (9′) DIAMETER

(Sheet 1 of 2)

STANDARD 602421

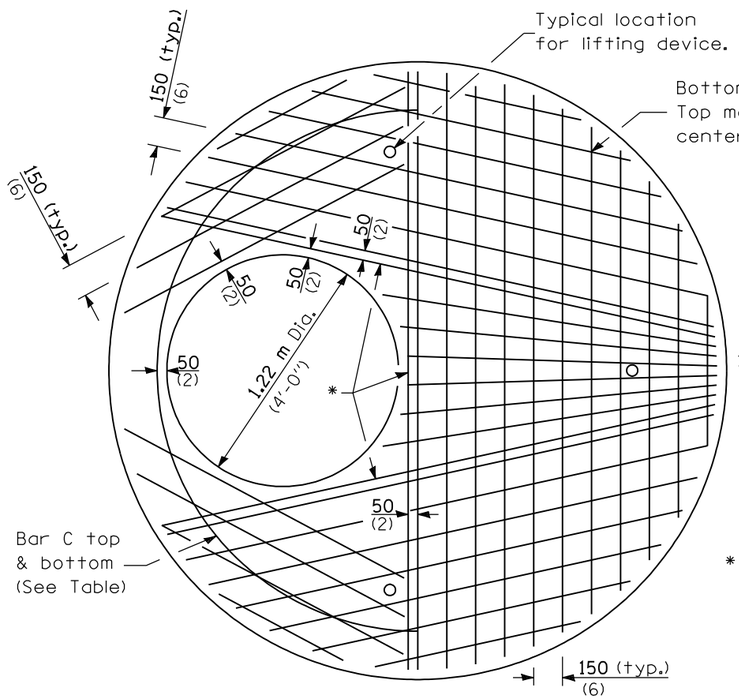

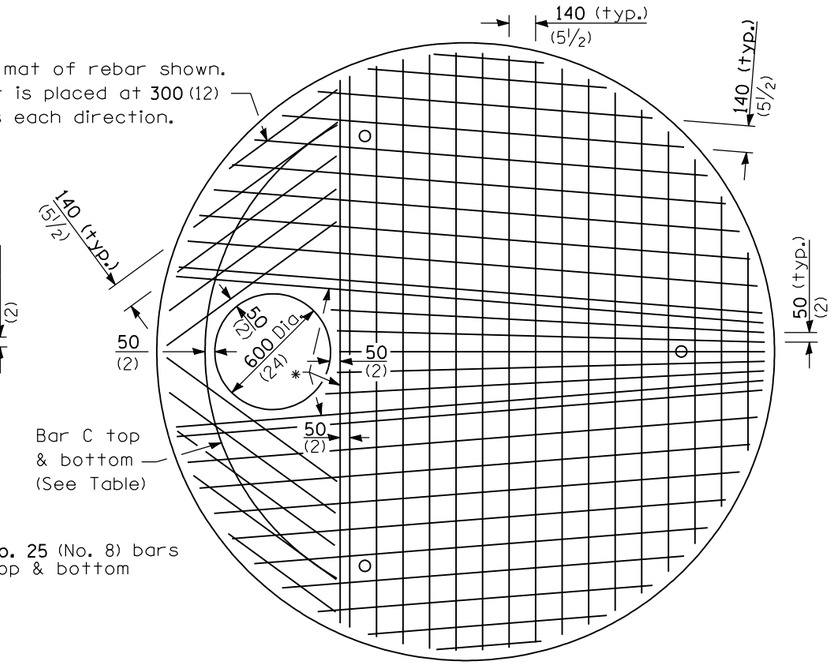

PLAN

Showing Rebar Reinforcement

Diameter of opening	Reinforcement Bar Size	Reinforcement "As" WWF each direction	No. 13 (No. 4) Bar C	
			Length	Radius
600 (24)	Bottom mat No. 25 (No. 8)	Bottom mat *** 3620 sq. mm/m (1.71) sq. in./ft.	2.90 m (9'-6")	1.372 m (4'-6")
	Top mat No. 13 (No. 4)	Top mat *** 510 sq. mm/m (0.24) sq. in./ft.		
1.2 m (4'-0")	Bottom mat No. 25 (No. 8)	Bottom mat *** 3325 sq. mm/m (1.57) sq. in./ft.	4.30 m (14'-2")	1.372 m (4'-6")
	Top mat No. 13 (No. 4)	Top mat *** 510 sq. mm/m (0.24) sq. in./ft.		

*** A maximum of two layers of welded wire fabric may be used to satisfy the required "As" for each mat.

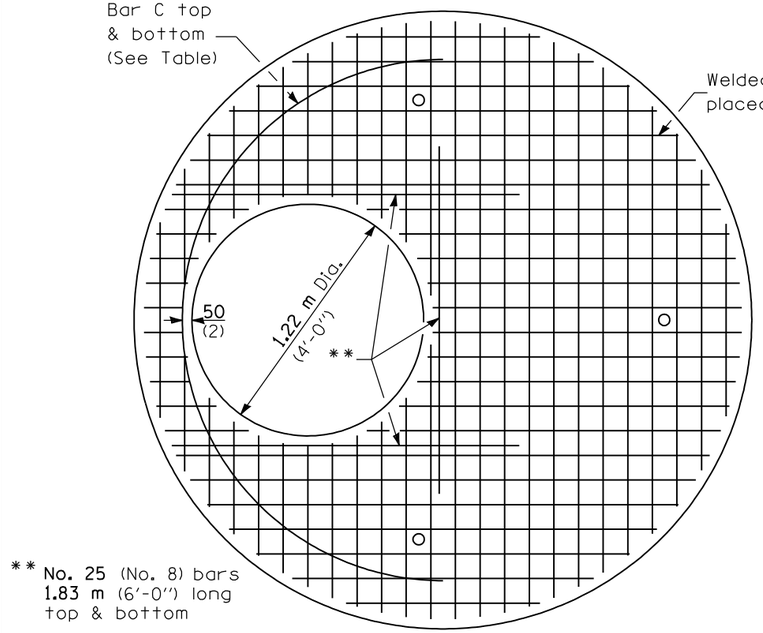

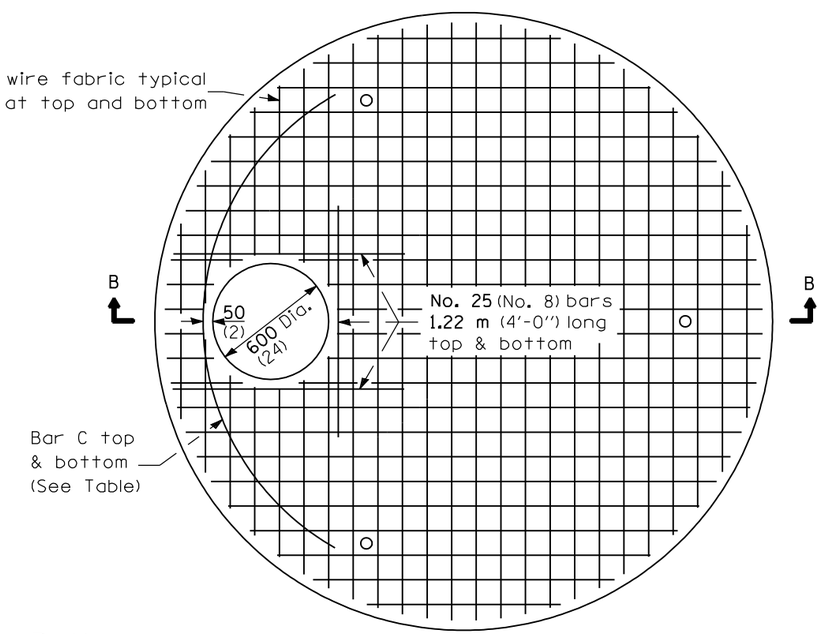

** No. 25 (No. 8) bars
1.83 m (6'-0") long
top & bottom

PLAN

Showing Welded Wire Fabric Reinforcement

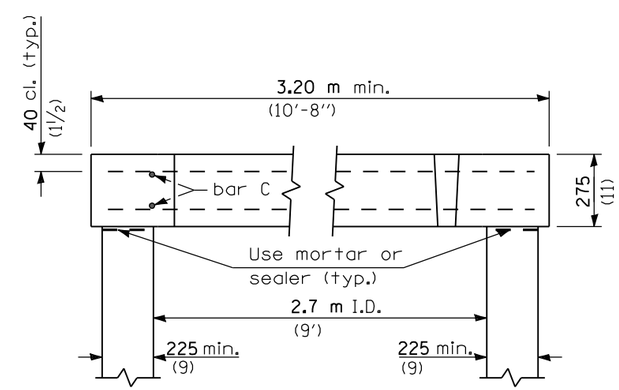

SECTION B-B

All dimensions are in millimeters (inches) unless otherwise shown.

Illinois Department of Transportation

PASSED April 1, 2006
ENGINEER OF POLICY AND PROCEDURES

APPROVED April 1, 2006
ENGINEER OF DESIGN AND ENVIRONMENT

ISSUED 4-1-06

MANHOLE TYPE A
2.7 m (9') DIAMETER

(Sheet 2 of 2)

STANDARD 602421