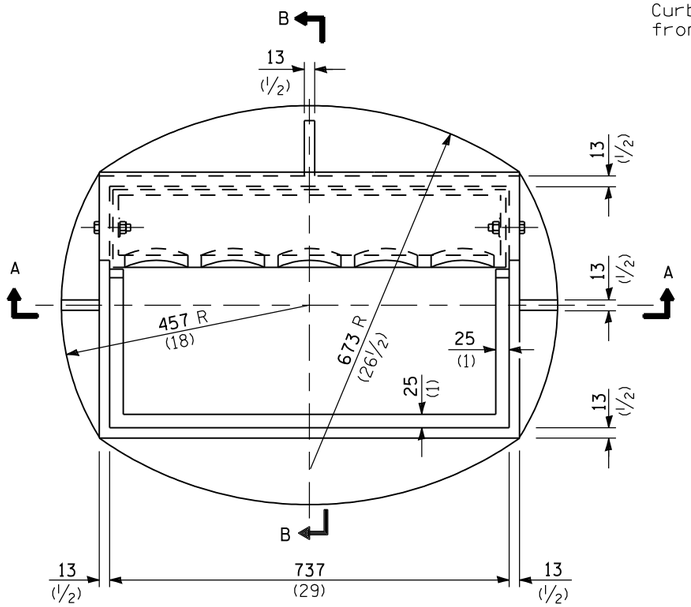

CAST FRAME

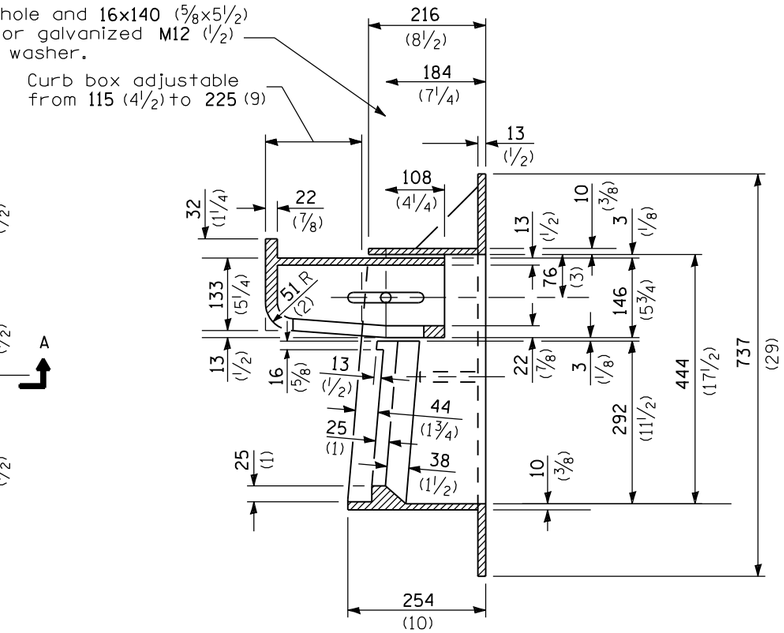

SECTION B-B

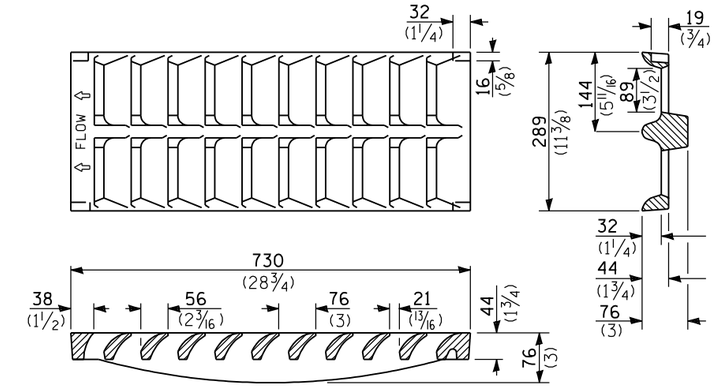

CAST GRATE

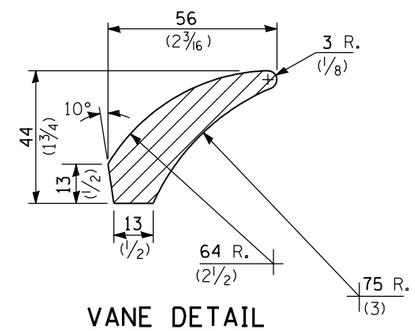

VANE DETAIL

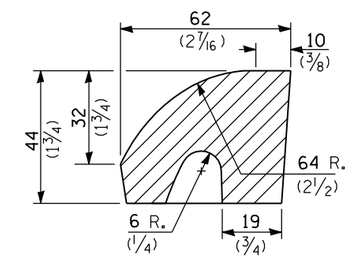

FRONT VANE DETAIL

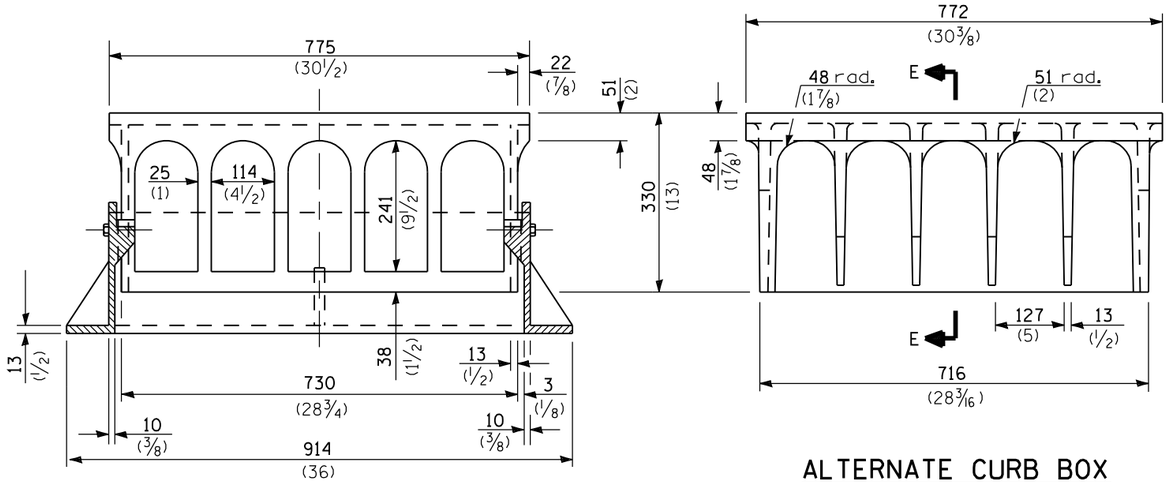

SECTION A-A

ALTERNATE CURB BOX

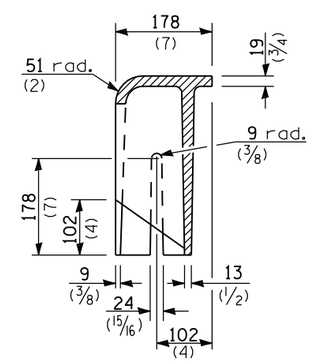

SECTION E-E

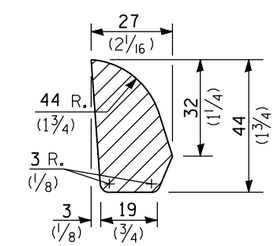

SIDE RIB DETAIL

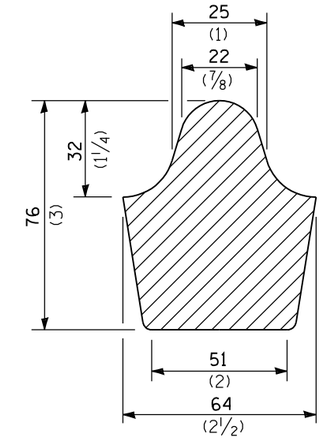

MIDDLE RIB DETAIL

All dimensions are in millimeters (inches) unless otherwise shown.

Illinois Department of Transportation

PASSED April 1, 2006
ENGINEER OF POLICY AND PROCEDURES
APPROVED April 1, 2006
ENGINEER OF DESIGN AND ENVIRONMENT

ISSUED 1-1-97

DATE	REVISIONS
4-1-06	Added alternate curb box.
1-1-04	Revised frame and removed weights.

FRAME AND GRATE TYPE 11V

STANDARD 604056-02