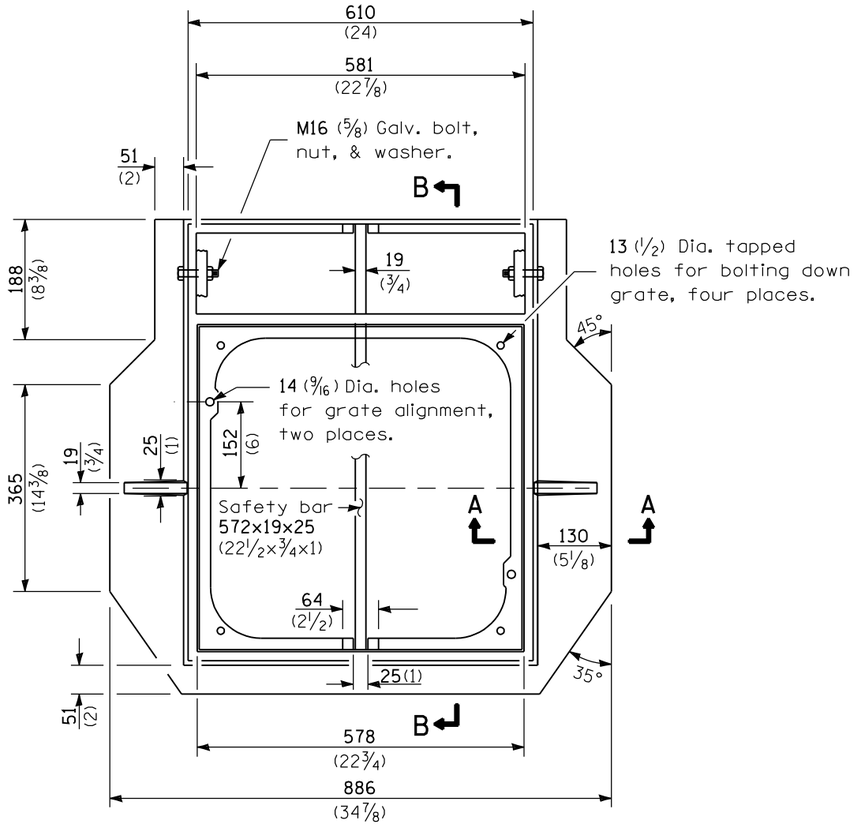

PLAN

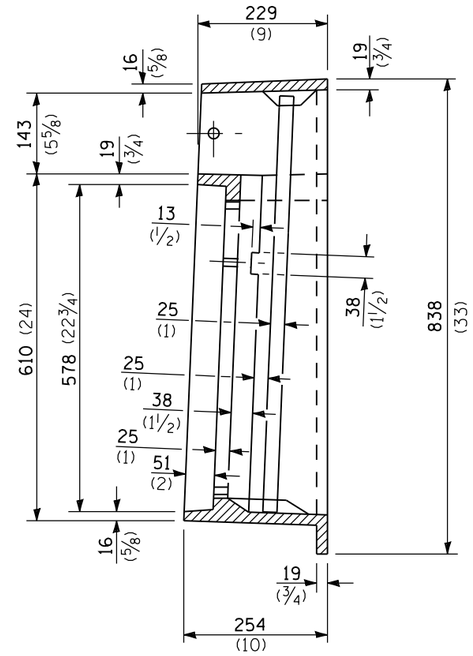

SECTION B-B

CAST FRAME

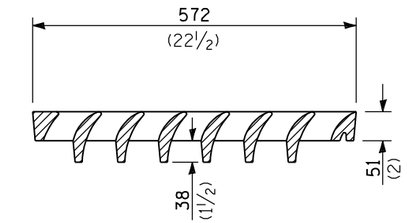

SECTION C-C

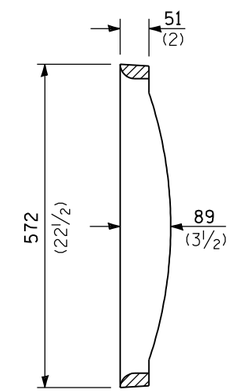

SECTION D-D

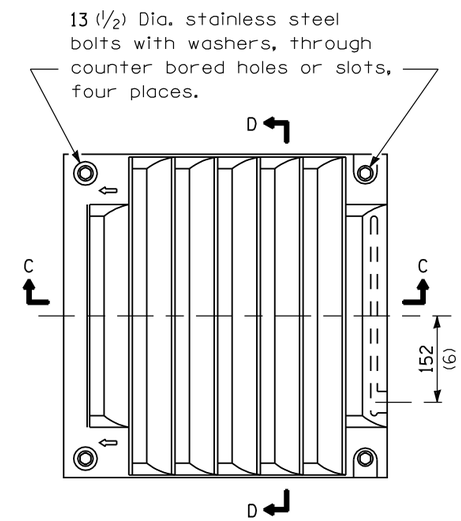

CAST GRATE

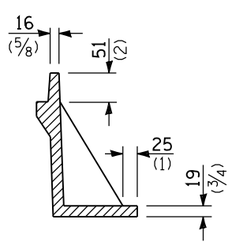

SECTION A-A

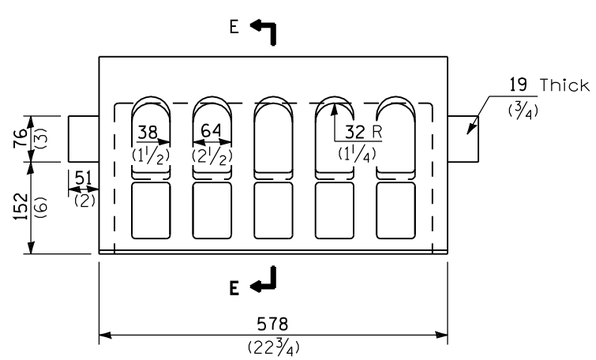

CURB BOX

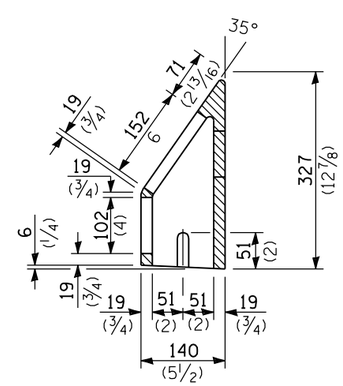

SECTION E-E

All dimensions are in millimeters (inches) unless otherwise shown.

Illinois Department of Transportation

PASSED January 1, 2007
ENGINEER OF POLICY AND PROCEDURES
APPROVED January 1, 2007
ENGINEER OF DESIGN AND ENVIRONMENT

ISSUED 1-1-97

DATE	REVISIONS
1-1-07	Revised frame flanges,
	changed to a bolt down
	grate w/ deeper vanes.
1-1-04	Removed weights.

FRAME AND GRATE TYPE 21

STANDARD 604076-03