NOTE

If the average grade of pavement for the distance A-E exceeds 2 percent, this distance shall be increased 1.8 m (6 ft.) for each 1 percent increase in grade.

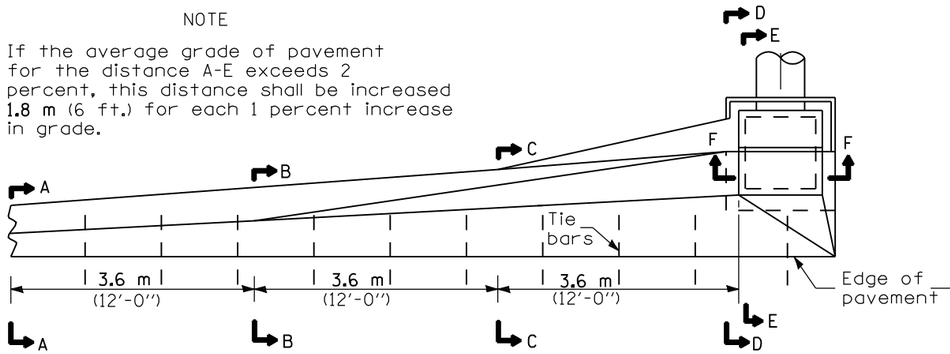

PLAN - SINGLE OUTLET

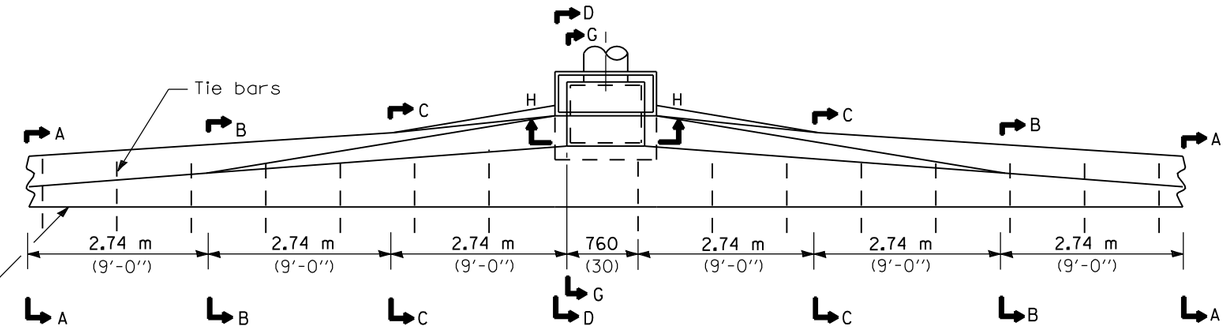

PLAN - DOUBLE OUTLET

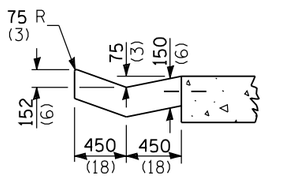

SECTION A-A

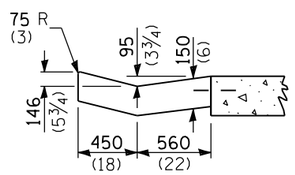

SECTION B-B

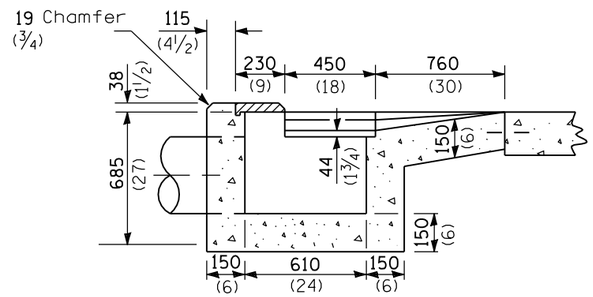

SECTION E-E

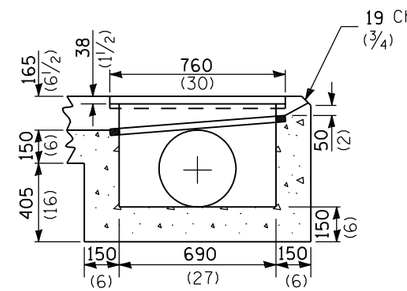

SECTION F-F

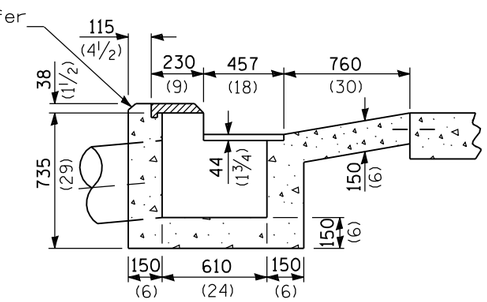

SECTION G-G

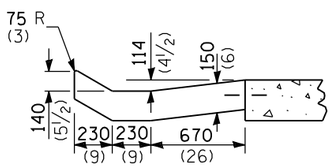

SECTION C-C

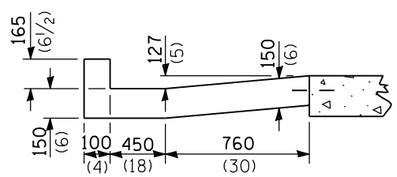

SECTION D-D

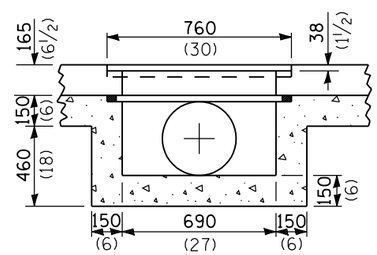

SECTION H-H

QUANTITIES

Material	Single	Double
Concrete - m3 (cu. yd.)	2.35 (3.07)	3.31 (4.33)
Cast Iron Grate- Ea.	1	1
Cast Iron Cover- Ea.	1	1
Pipe Drain - Dia. mm (in.)	375 (15)	450 (18)

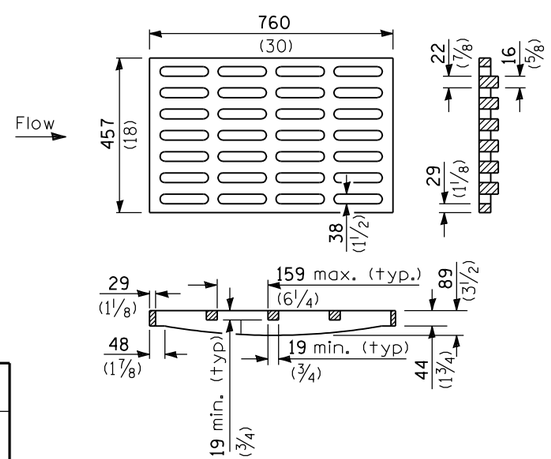

GRATE AND COVER TYPE 2A

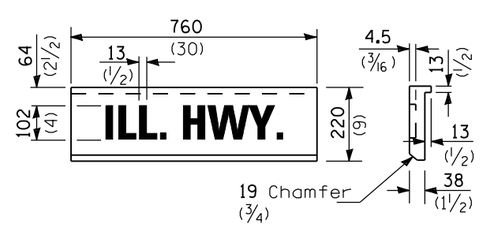

GENERAL NOTES

The gutter outlet shall be tied to the pavement in accordance with details for longitudinal construction joint shown on Standard 420001.

All dimensions are in millimeters (inches) unless otherwise shown.

Illinois Department of Transportation

PASSED January 1, 2007
ENGINEER OF POLICY AND PROCEDURES

APPROVED January 1, 2007
ENGINEER OF DESIGN AND ENVIRONMENT

ISSUED 1-1-97

DATE	REVISIONS
1-1-07	Removed weight
	of grate and cover.
1-1-00	Changed 400 to 375
	in Quantities Table

OUTLETS TYPE 2 FOR TYPE A GUTTER

STANDARD 606111-02