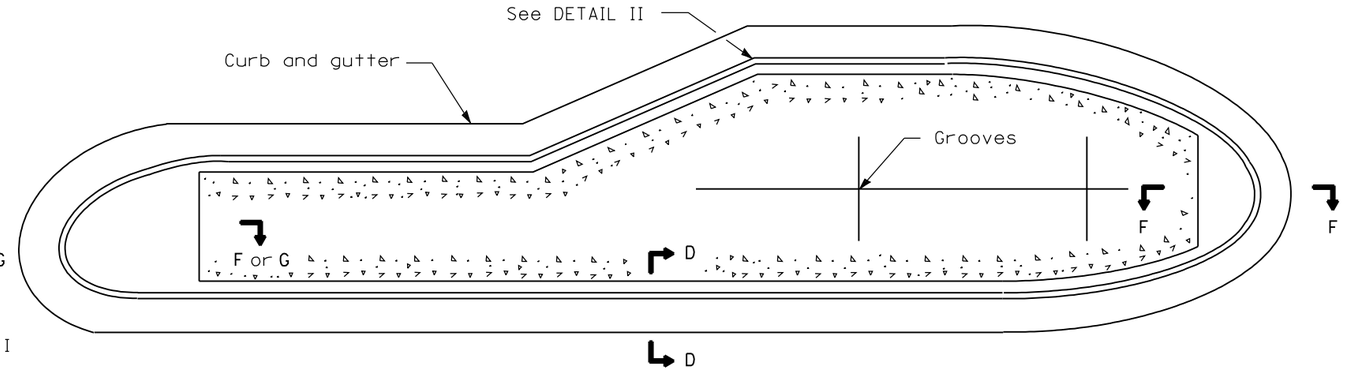

TYPICAL PLAN OF MEDIAN ISLAND

(SEE SHEET 2 FOR DETAILS OF RAMPED NOSES)

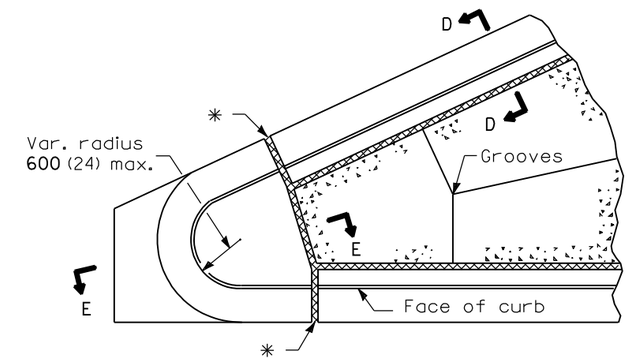

DETAIL I

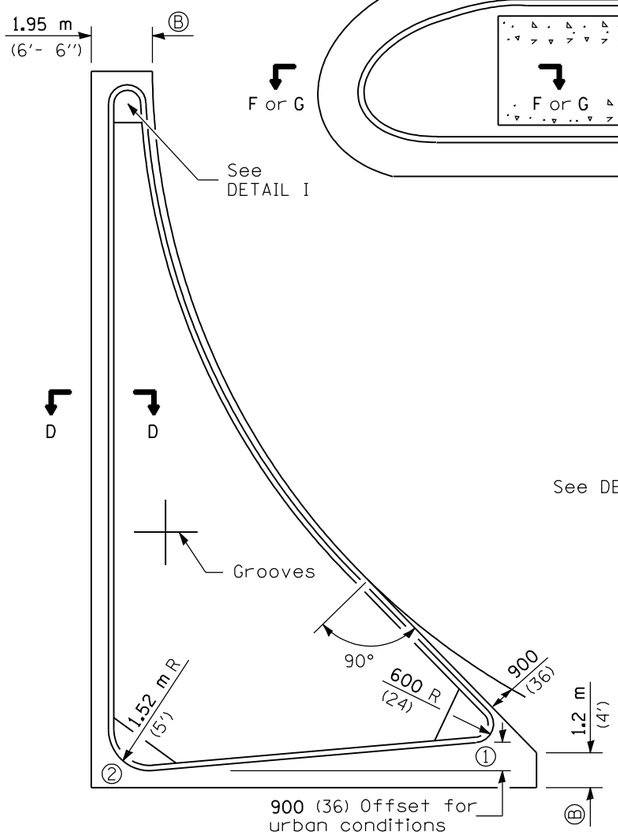

LARGE ISLAND

(FREE FLOW DESIGN)

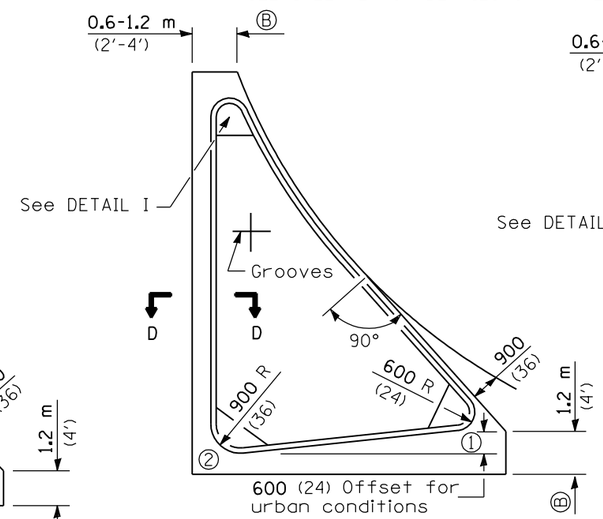

INTERMEDIATE ISLAND

(FOR RIGHT TURN LANE DESIGN)

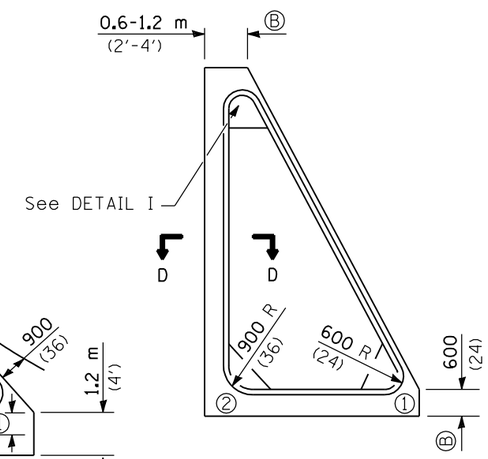

SMALL ISLAND

TYPICAL PLANS OF CORNER ISLANDS

(SEE SHEET 2 FOR DETAILS OF RAMPED NOSES)

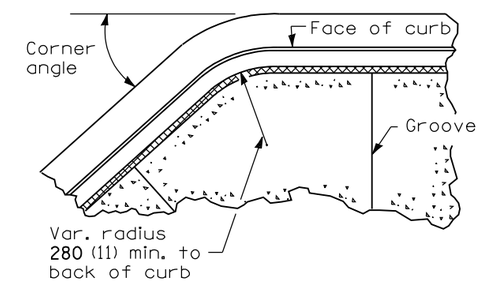

DETAIL II

Typical detail when corner angle is less than 90° and for other corners with radius greater than 600 (24).

NOTE

The blockouts Ⓑ for the islands shall be extended so that the termination will line up with proposed or existing pavement joint.

Noses ① and ② shall be ramped unless noted otherwise on the plans. (See sheet 2 for length)

GENERAL NOTES

PEJF = Preformed expansion joint filler.

Median layout and radii shall be as shown on the plans.

Keyed longitudinal construction joints shall be constructed without tie bars.

See Standard 420001 and 606001 for details not shown.

* 20 mm (¾") PEJF conforming to the full cross section of the curb, gutter and median surface.

X = PCC base course plus HMA thickness.

t = Pavement or pcc base course thickness.

All dimensions are in millimeters (inches) unless otherwise shown.

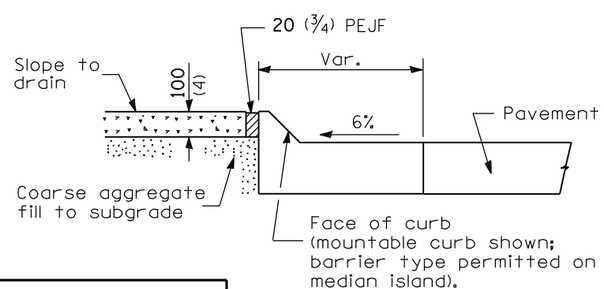

SECTION D-D

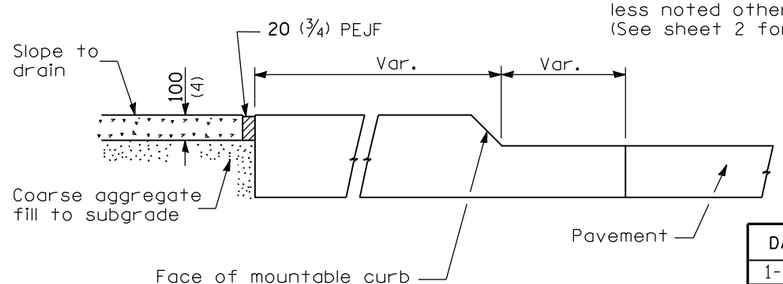

SECTION E-E

Illinois Department of Transportation

PASSED January 1, 2007
ENGINEER OF POLICY AND PROCEDURES

APPROVED January 1, 2007
ENGINEER OF DESIGN AND ENVIRONMENT

ISSUED 1-1-97

DATE	REVISIONS
1-1-07	Switched to Hot-Mix
	Asphalt (HMA)
	terminology.
1-1-99	Note revised in
	Sections D-D & E-E.

PC CONCRETE ISLANDS AND MEDIANS

(Sheet 1 of 2)

STANDARD 606301-03

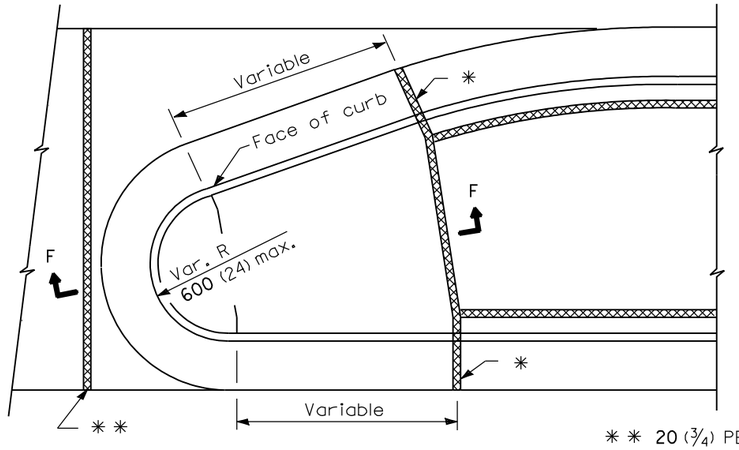

TYPE P MEDIAN SURFACE

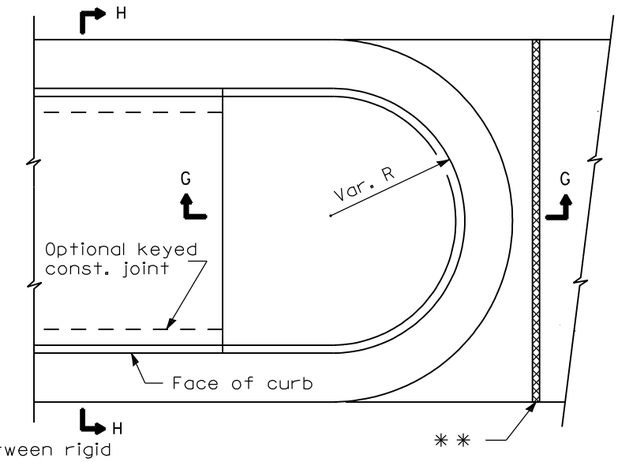

SOLID MEDIAN

** 20 (3/4) PEJF between rigid pavement and median end. Align with joint in adjacent pavement.

PLAN
(RAMPED NOSES)

TABLE OF DIMENSIONS					
TYPE SB MEDIANS					
TYPE	A	B	C	D	R_1
SB-15.15 (SB-6.06)	150 (6)	25 (1)	150 (6)	150 (6)	25 (1)
SB-15.30 (SB-6.12)	300 (12)	25 (1)	150 (6)	150 (6)	25 (1)
SB-15.45 (SB-6.18)	450 (18)	25 (1)	150 (6)	150 (6)	25 (1)
SB-15.60 (SB-6.24)	600 (24)	25 (1)	150 (6)	150 (6)	25 (1)
SB-22.15 (SB-9.06)	150 (6)	50 (2)	125 (5)	225 (9)	25 (1)
SB-22.30 (SB-9.12)	300 (12)	50 (2)	125 (5)	225 (9)	25 (1)
SB-22.45 (SB-9.18)	450 (18)	50 (2)	125 (5)	225 (9)	25 (1)
SB-22.60 (SB-9.24)	600 (24)	50 (2)	125 (5)	225 (9)	25 (1)

TABLE OF DIMENSIONS					
TYPE M AND SM MEDIANS					
TYPE	A	B	C	D	R_1
M-5.15 (M-2.06	150 (6)	50 (2)	100 (4)	50 (2)	50 (2)
M-5.30 (M-2.12)	300 (12)	50 (2)	100 (4)	50 (2)	50 (2)
SM-10.15 (SM-4.06)	150 (6)	100 (4)	75 (3)	100 (4)	75 (3)
SM-10.30 (SM-4.12)	300 (12)	100 (4)	75 (3)	100 (4)	75 (3)
SM-10.45 (SM-4.18)	450 (18)	100 (4)	75 (3)	100 (4)	75 (3)
SM-10.60 (SM-4.24)	600 (24)	100 (4)	75 (3)	100 (4)	75 (3)
SM-15.15 (SM-6.06)	150 (6)	150 (6)	50 (2)	150 (6)	50 (2)
SM-15.30 (SM-6.12)	300 (12)	150 (6)	50 (2)	150 (6)	50 (2)
SM-15.45 (SM-6.18)	450 (18)	150 (6)	50 (2)	150 (6)	50 (2)
SM-15.60 (SM-6.24)	600 (24)	150 (6)	50 (2)	150 (6)	50 (2)

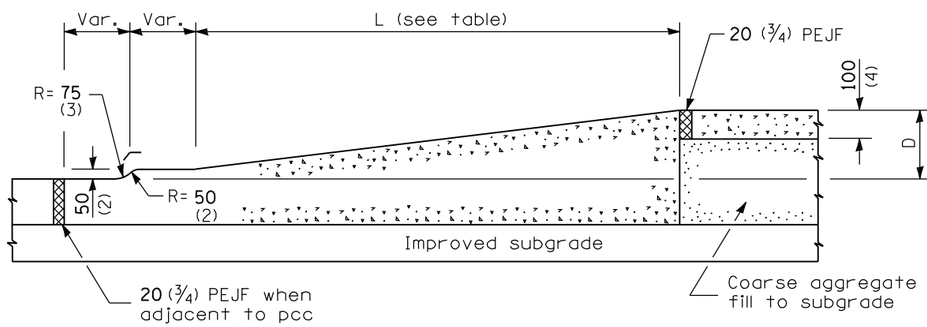

SECTION F-F

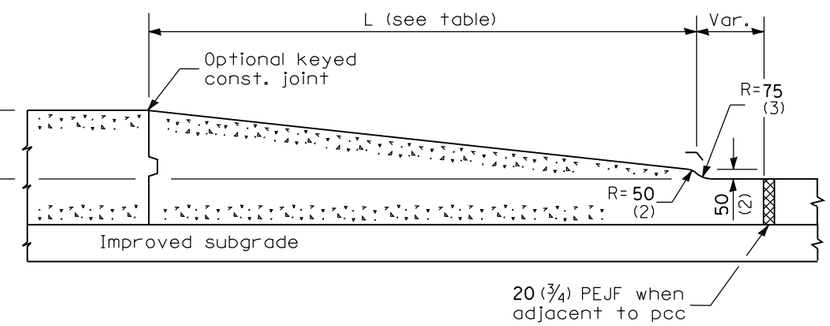

SECTION G-G

TABLE OF RAMPED NOSE LENGTHS	
TYPE OF NOSE	L
Median	1.8 m (6')
Small Island	600 (24)
Intermediate Island	1.2 m (4')
Large Island	1.8 m (6')

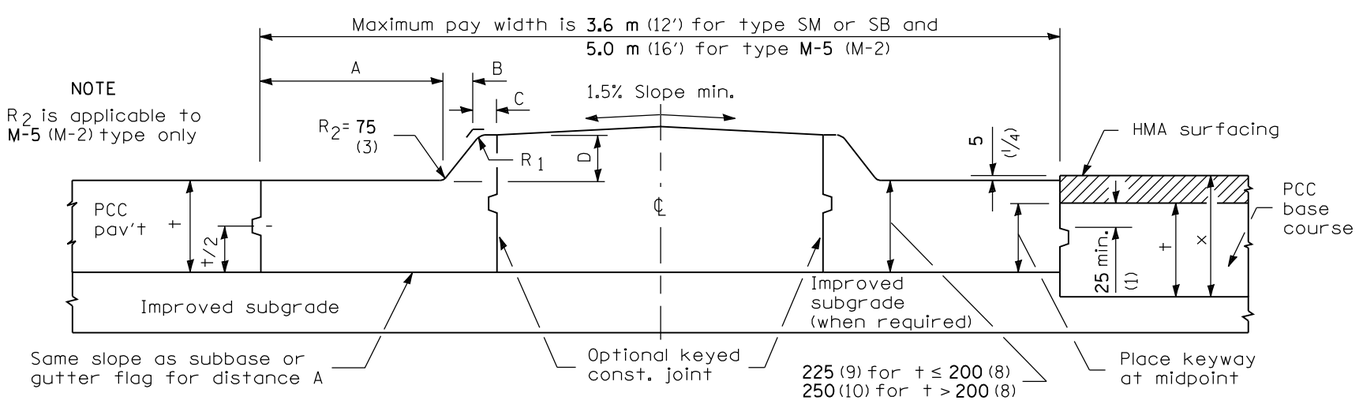

HALF SECTION FOR PCC PAVEMENT

HALF SECTION FOR PCC BASE COURSE

SECTION H-H
(TYPE SM, SB & M-5 (M-2) MEDIANS)

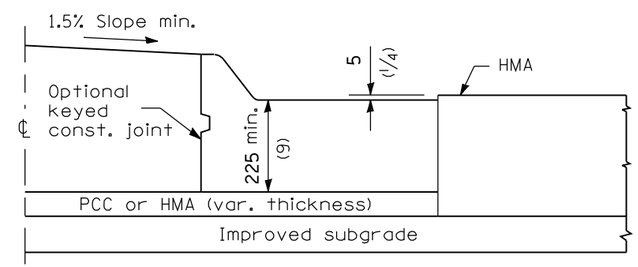

HALF SECTION FOR FLEXIBLE PAVEMENT

All dimensions are in millimeters (inches) unless otherwise shown.

Illinois Department of Transportation

PASSED January 1, 2007
ENGINEER OF POLICY AND PROCEDURES
APPROVED January 1, 2007
ENGINEER OF DESIGN AND ENVIRONMENT

ISSUED 1-1-97

PC CONCRETE ISLANDS AND MEDIANS

(Sheet 2 of 2)

STANDARD 606301-03