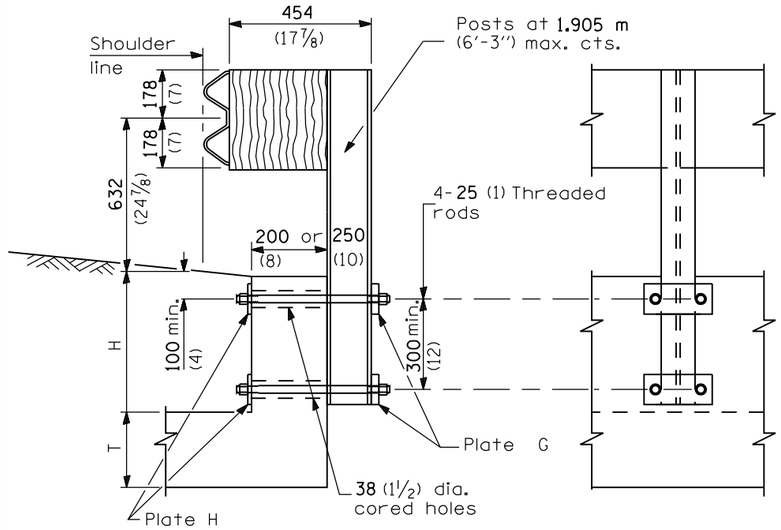

CROSS SECTION ELEVATION

CONDITION H > 450 (18)

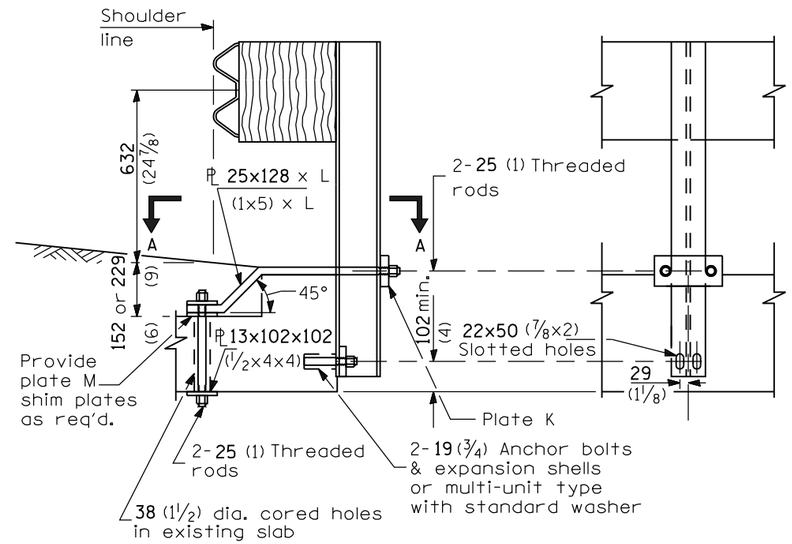

CROSS SECTION ELEVATION

CASE II
MOUNTED ON TOP HEADWALL
WITH SQUARE TIP

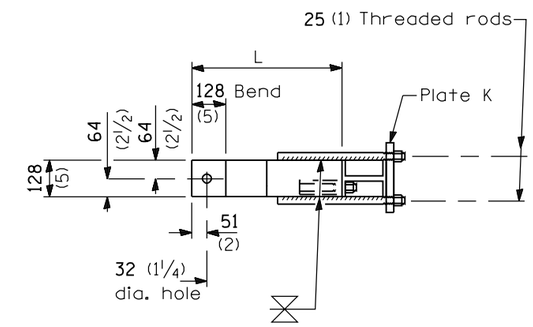

SECTION A-A

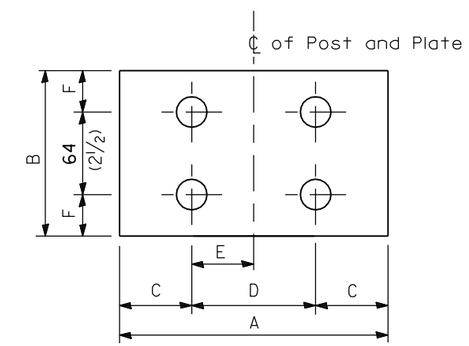

PLATE TYPE J

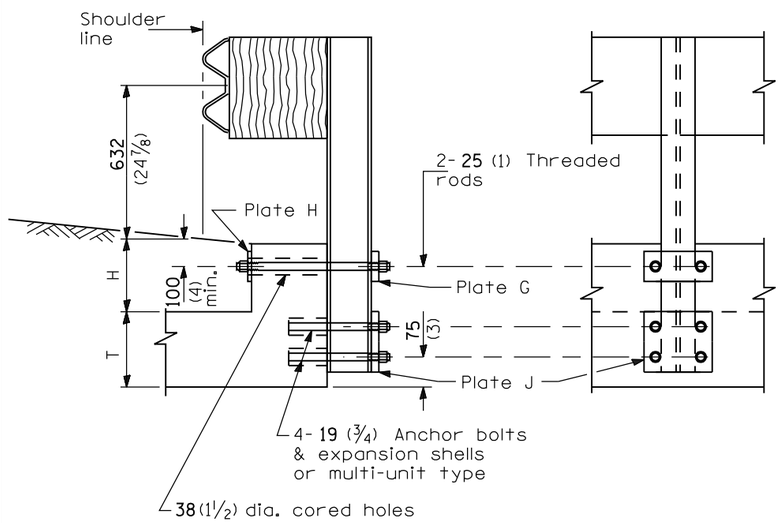

CROSS SECTION ELEVATION

CONDITION H < 450 (18) & H+T ≥ 510 (20)

CASE I
MOUNTED ON
RAISED HEADWALL

PLATE DIMENSIONS								
Type	A	B	C	D	E	F	Hole Dia.	Thick-ness
G	230 (9)	100 (4)	40 (1 1/2)	150 (6)	75 (3)	50 (2)	29 (1 1/8)	25 (1)
H	230 (9)	100 (4)	40 (1 1/2)	150 (6)	75 (3)	50 (2)	29 (1 1/8)	13 (1/2)
J	230 (9)	126 (5)	40 (1 1/2)	150 (6)	75 (3)	31 (1 1/4)	22 (7/8)	25 (1)
K	230 (9)	100 (4)	40 (1 1/2)	150 (6)	75 (3)	50 (2)	29 (1 1/8)	32 (1 1/4)
M	100 (4)	100 (4)	50 (2)	N/A	N/A	50 (2)	32 (1 1/8)	13 (1/2)

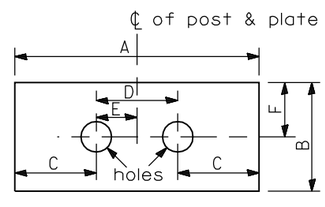

PLATE TYPES G, H & K

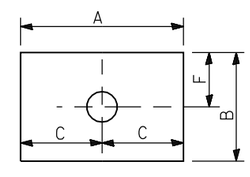

PLATE TYPE M

GENERAL NOTES

Except as noted, dimensions and notes specified for case II, III, and IV are the same as specified for case I.

For details of guardrail elements not shown, see Standard 630001.

All threaded rods shall be installed with heavy hex nuts and standard washers.

All dimensions are in millimeters (inches) unless otherwise shown.

Illinois Department of Transportation

PASSED January 1, 2007
ENGINEER OF POLICY AND PROCEDURES
APPROVED January 1, 2007
ENGINEER OF DESIGN AND ENVIRONMENT

ISSUED 1-1-97

DATE	REVISIONS
1-1-07	Changes adopted to
	implement the Midwest
	Guardrail System.
4-1-06	Corrected bolt hole
	spacing for base plate
	of Case IV.

GUARDRAIL MOUNTED ON EXISTING CULVERTS

(Sheet 1 of 2)

STANDARD 630101-07

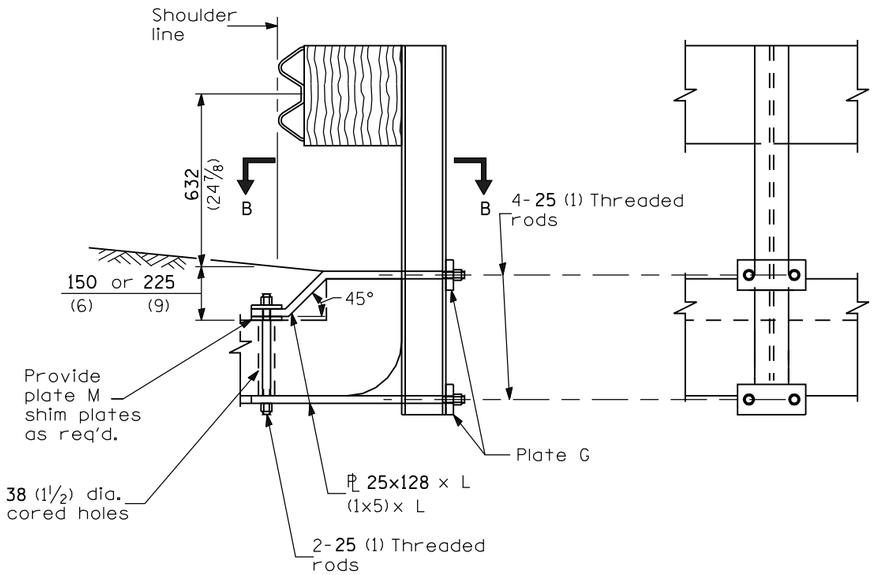

CROSS SECTION

ELEVATION

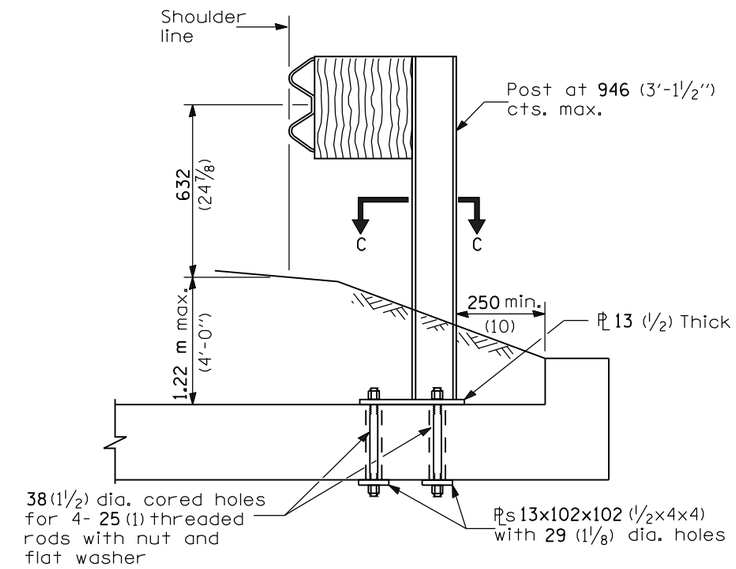

CROSS SECTION

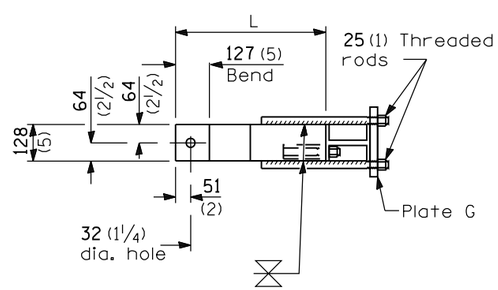

SECTION B-B

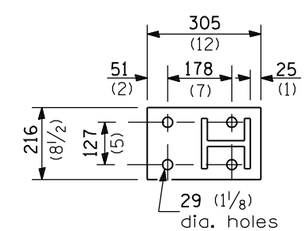

SECTION C-C

CASE III
MOUNTED ON HEADWALL
WITH CURVED OR DEMOLISHED TIP

CASE IV
MOUNTED ON SLAB

All dimensions are in millimeters (inches) unless otherwise shown.

Illinois Department of Transportation

PASSED January 1, 2007
ENGINEER OF POLICY AND PROCEDURES
APPROVED January 1, 2007
ENGINEER OF DESIGN AND ENVIRONMENT

ISSUED 1-1-97

GUARDRAIL MOUNTED ON EXISTING CULVERTS

(Sheet 2 of 2)

STANDARD 630101-07