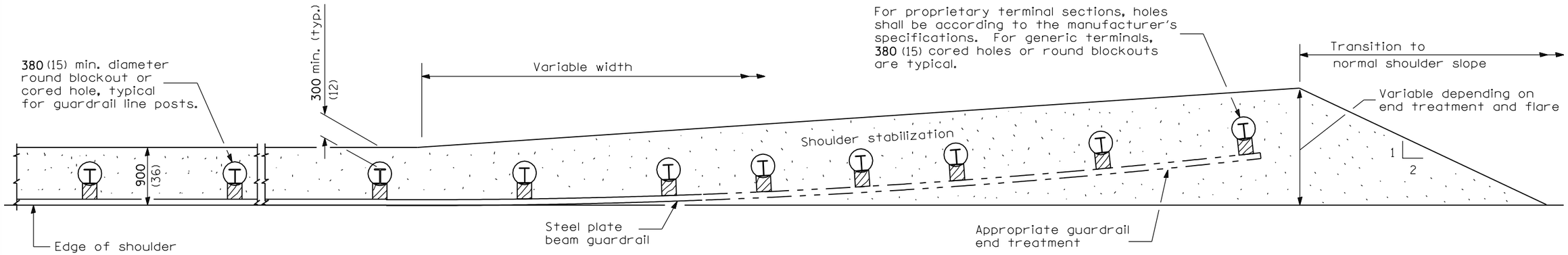

PLAN

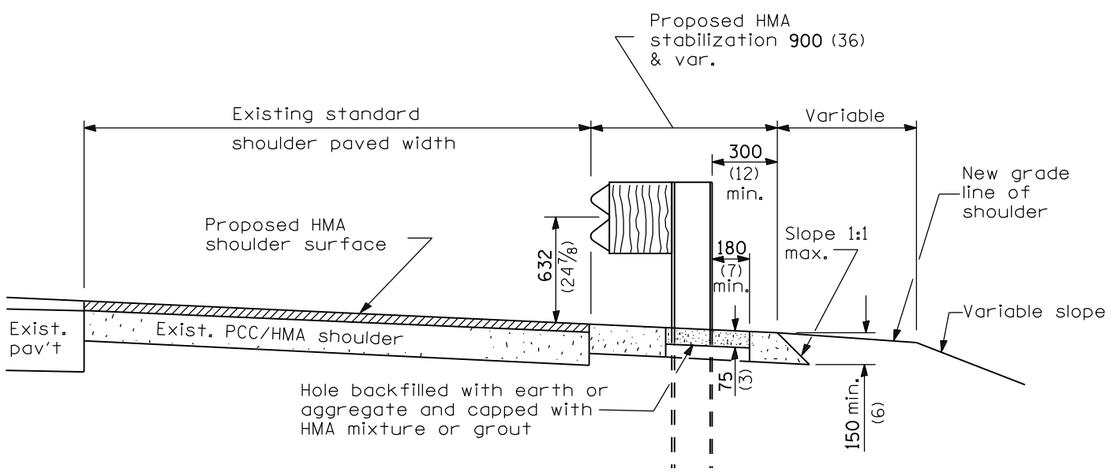

RESURFACING

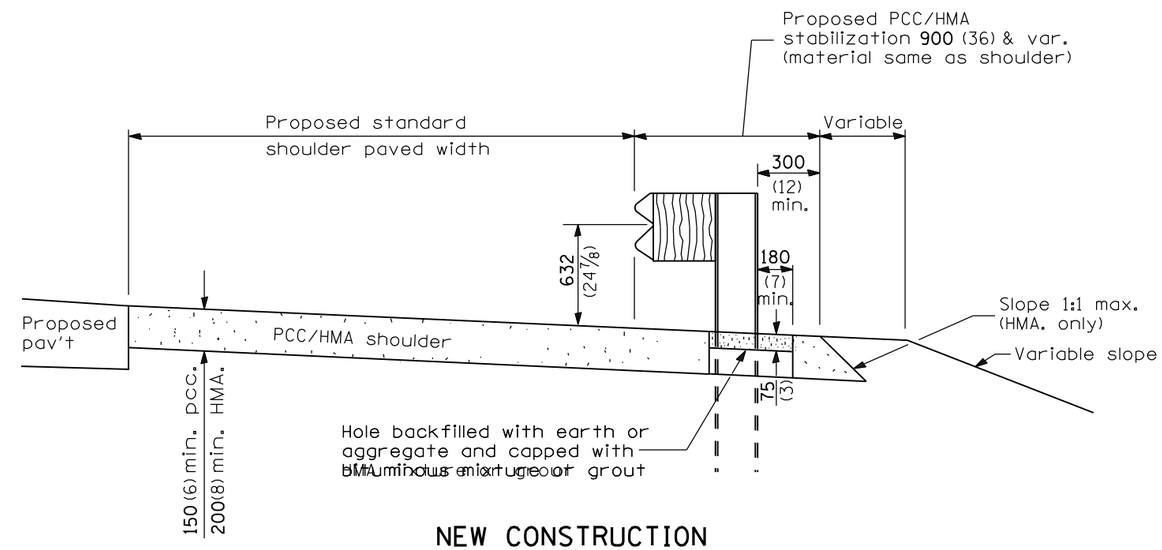

NEW CONSTRUCTION

GENERAL NOTES

See Standard 482001, 482006 or 483001 for details not shown.

All dimensions are in millimeters (inches) unless otherwise shown.

Illinois Department of Transportation

PASSED January 1, 2007
ENGINEER OF POLICY AND PROCEDURES

APPROVED January 1, 2007
ENGINEER OF DESIGN AND ENVIRONMENT

ISSUED 1-1-97

DATE	REVISIONS
1-1-07	Changes adopted to implement the Midwest Guardrail System.
1-1-05	Added holes in the stabilization for guardrail post.

PCC/HMA STABILIZATION AT STEEL PLATE BEAM GUARDRAIL

STANDARD 630201-04