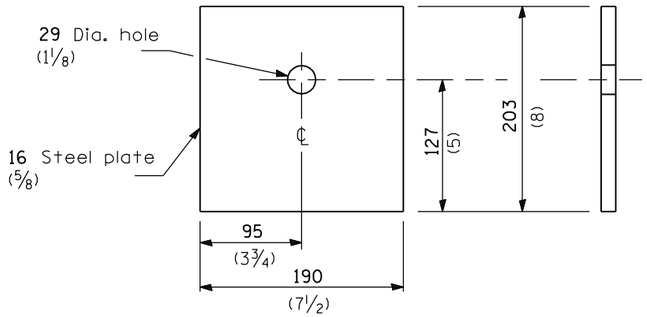

BEARING PLATE K

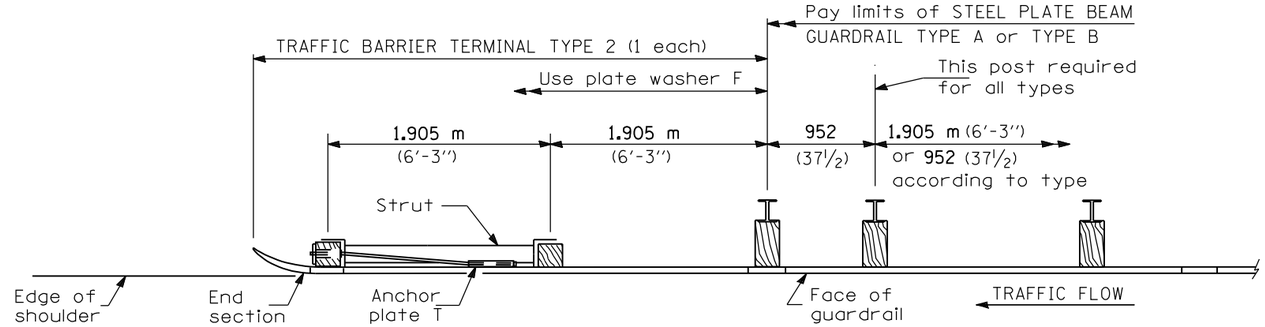

PLAN

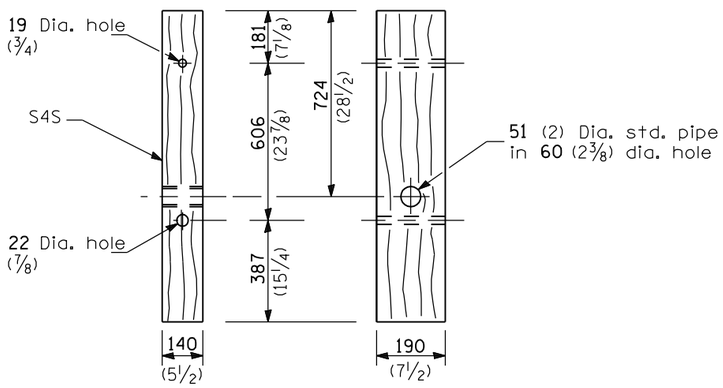

WOOD POST

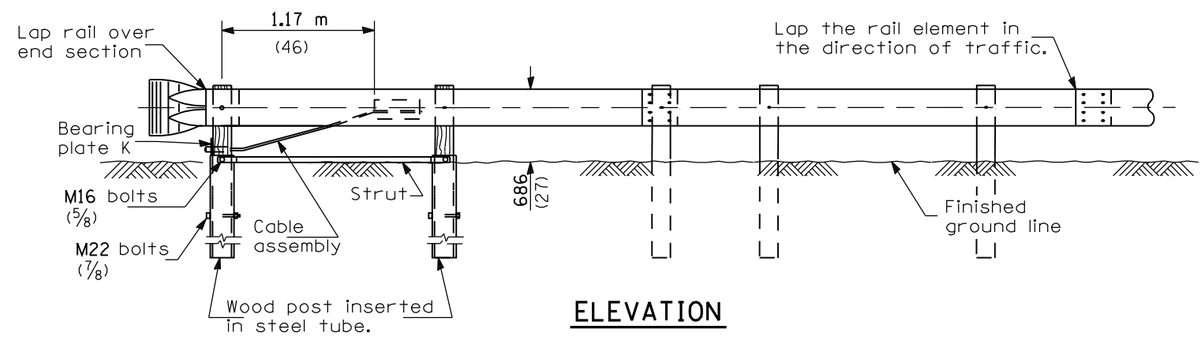

ELEVATION

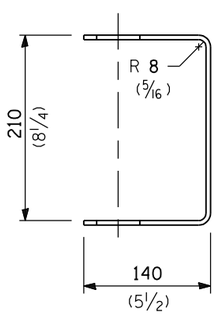

YOKE

5 (3/16) thick steel

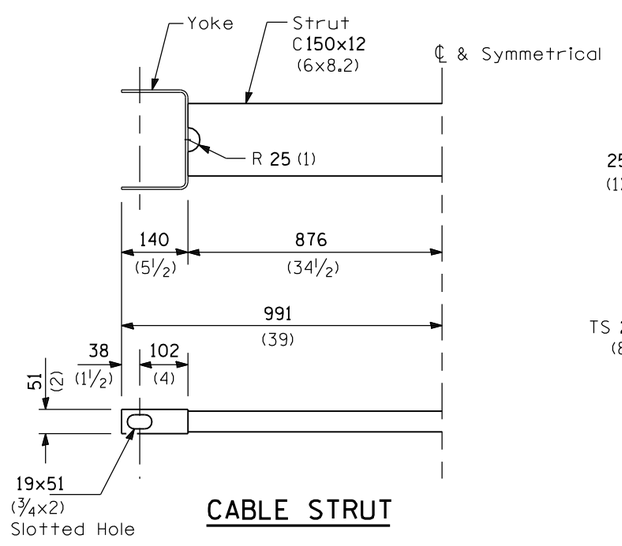

CABLE STRUT

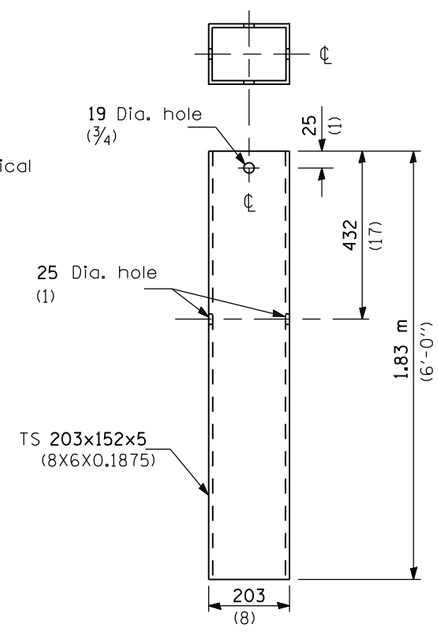

STEEL TUBE

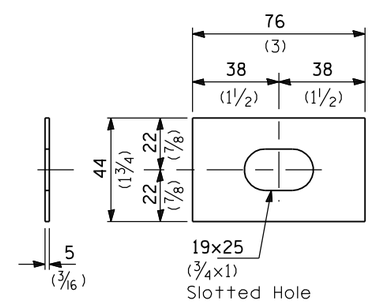

PLATE WASHER F

GENERAL NOTES

See Standard 630001 for details of guardrail not shown.

The bearing plate K shall be held in position by (2) two eight penny nails driven into the post and bent over the top of the plate.

All dimensions are in millimeters (inches) unless otherwise shown.

Illinois Department of Transportation

PASSED January 1, 2007
ENGINEER OF POLICY AND PROCEDURES
APPROVED January 1, 2007
ENGINEER OF DESIGN AND ENVIRONMENT

ISSUED 1-1-97

DATE	REVISIONS
1-1-07	Changes adopted to
	implement the Midwest
	Guardrail System.
1-1-00	Del. Plate A .

TRAFFIC BARRIER TERMINAL, TYPE 2

STANDARD 631011-03