TEMPORARY CONCRETE BARRIER	
POSTED SPEED	TAPER RATIO
70 km/h (40 mph) AND ABOVE	12:1
BELOW 70 km/h (40 mph)	8:1

SEQUENCE OF OPERATIONS						
PHASE	A			B		
INTERVAL	1	2	3	4	5	6
NORTHBOUND OR EASTBOUND	G	Y	R	R	R	R
SOUTHBOUND OR WESTBOUND	R	R	R	G	Y	R

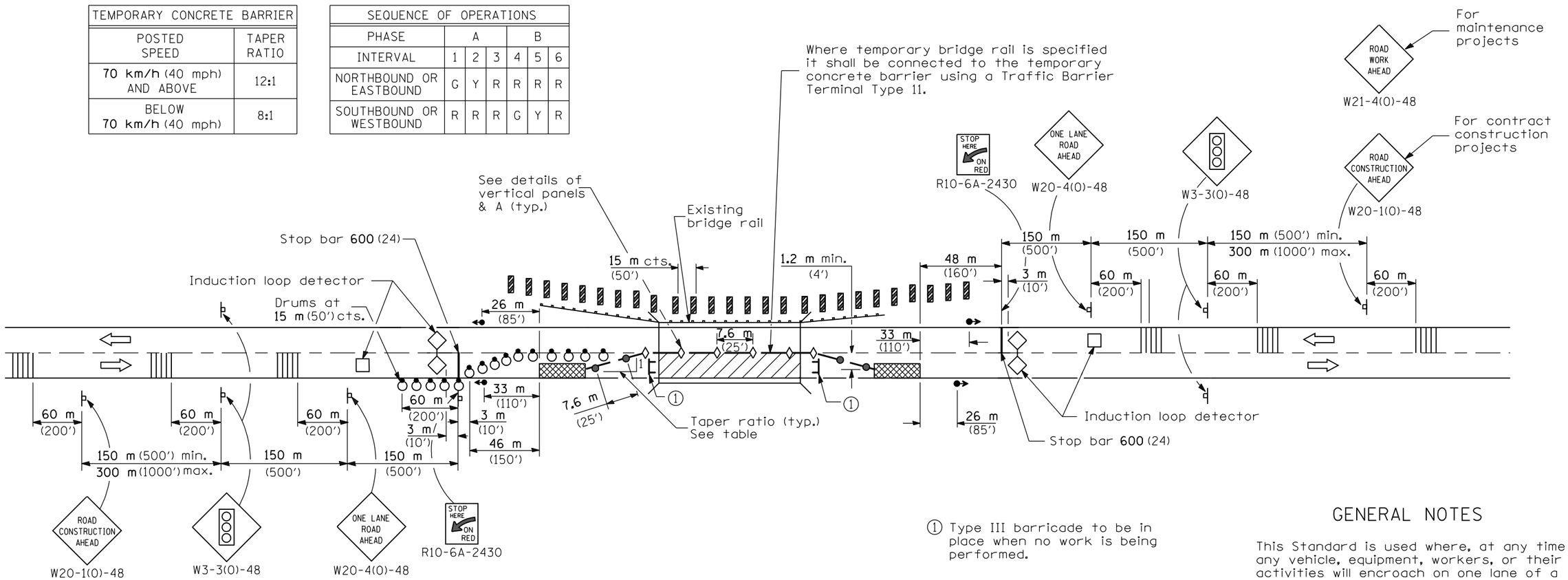

① Type III barricade to be in place when no work is being performed.

SYMBOLS

- Work area
- Sign
- Type III barricade
- Drum with steady burning light
- Traffic signal
- Temporary rumble strip (when specified)
- Induction loop detector
- Double vertical panel
- Type C Bidirectional reflector
- Temporary concrete barrier
- Impact attenuator
- Steady burning lights and double vertical panels

GENERAL NOTES

This Standard is used where, at any time any vehicle, equipment, workers, or their activities will encroach on one lane of a bridge. Traffic signals and a positive barrier are required.

When traffic signals are not in operation, flaggers shall be used and traffic control devices shall conform to Standard 701201 or 701206.

Temporary concrete barrier shall be according to Standard 704001.

Bi-directional lights shall be used at night along the centerline where the work area is separated from the travel lane using barricades or drums. Monodirectional lights shall be used at night on all other barricades or drums.

Existing or temporary pavement marking shall be on both sides of the open lane from stop bar to stop bar.

All dimensions are in millimeters (inches) unless otherwise shown.

Illinois Department of Transportation

APPROVED January 1, 2005
ENGINEER OF OPERATIONS
APPROVED January 1, 2005
Michael L. Heine
ENGINEER OF DESIGN AND ENVIRONMENT

ISSUED 1-1-97

DATE	REVISIONS
1-1-05	Revised notes, deleted
	pavement markers and
	advisory speed sign.
10-1-04	Removed 9 m (30')
	access and made impact
	attenuator generic.

LANE CLOSURE, 2L, 2W, BRIDGE REPAIR WITH BARRIER

(Sheet 1 of 2)

STANDARD 701321-08

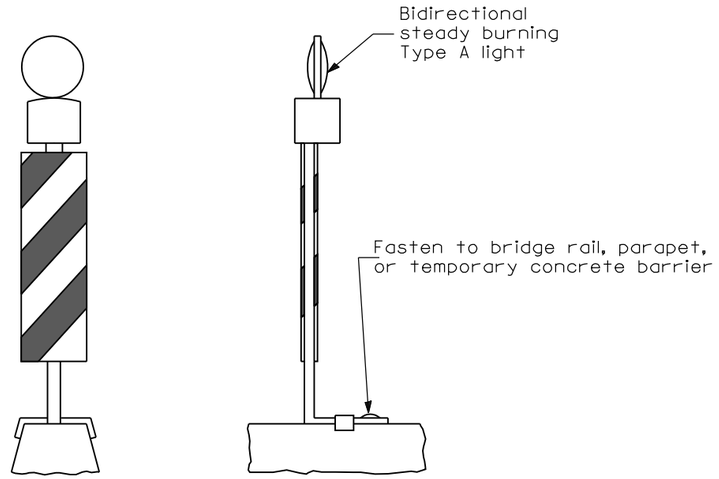

(Suggested mounting detail)

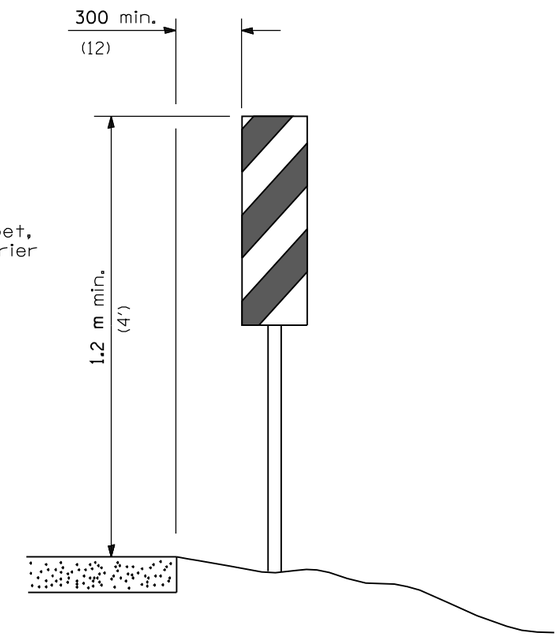

VERTICAL PANELS

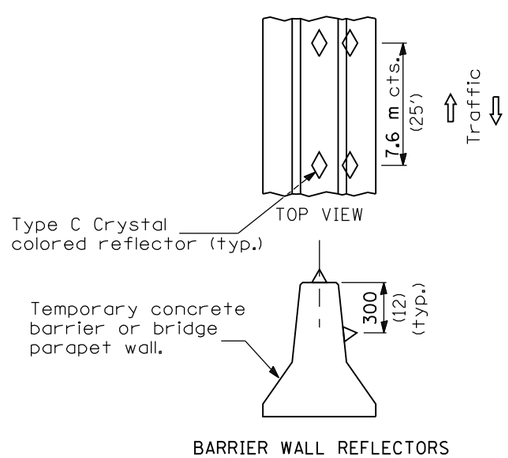

BARRIER WALL REFLECTORS

DETAIL A

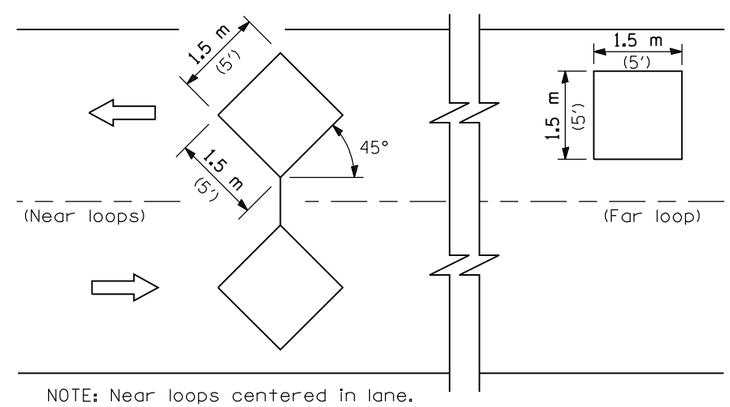

NOTE: Near loops centered in lane.

INDUCTION LOOP DETECTOR (TYPICAL)

(See traffic control plan for placement)

Illinois Department of Transportation

APPROVED January 1, 2005
ENGINEER OF OPERATIONS

APPROVED January 1, 2005
ENGINEER OF DESIGN AND ENVIRONMENT

ISSUED 1-1-97

LANE CLOSURE, 2L, 2W,
BRIDGE REPAIR WITH BARRIER

(Sheet 2 of 2)

STANDARD 701321-08