F SHAPE DESIGN

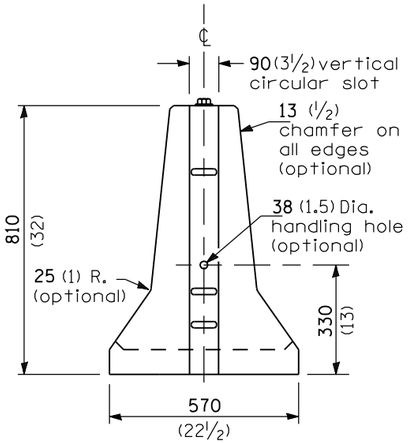

END VIEW
(Showing lifting slot)

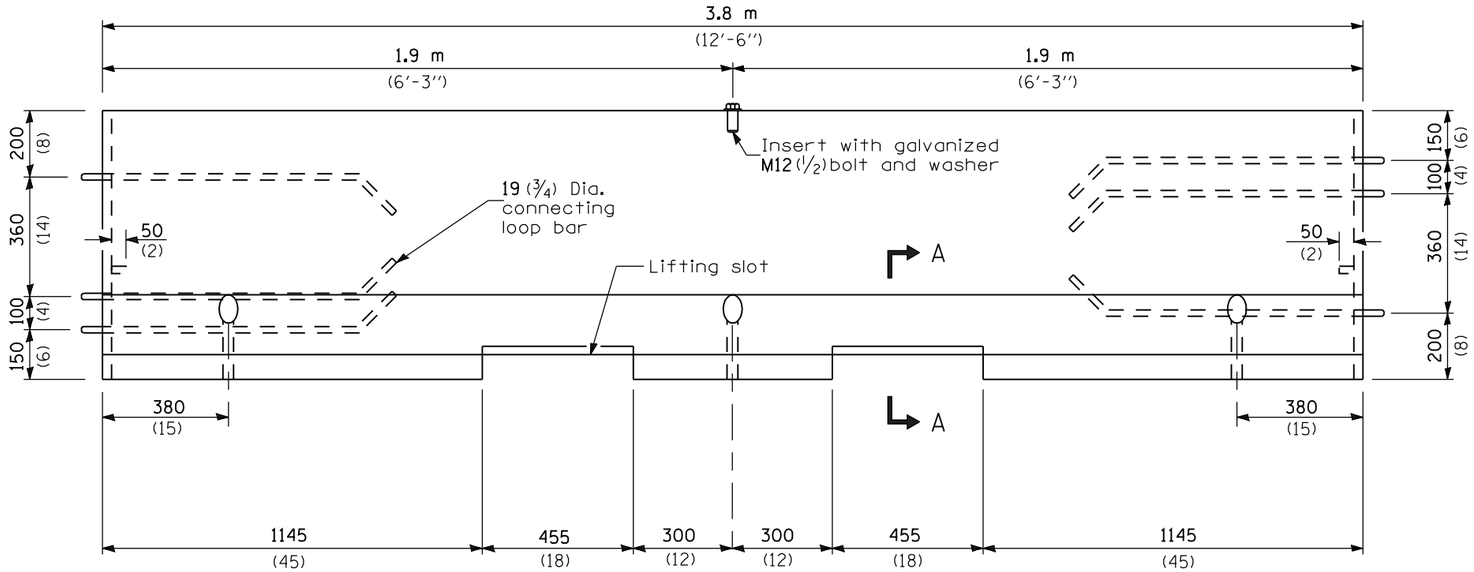

ELEVATION
(Showing connecting loop bars and vertical panel bolt/insert)

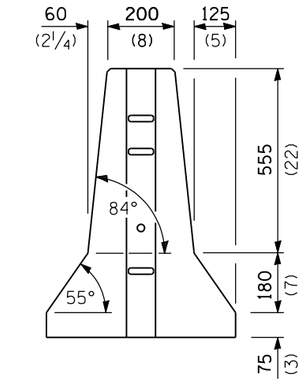

END VIEW

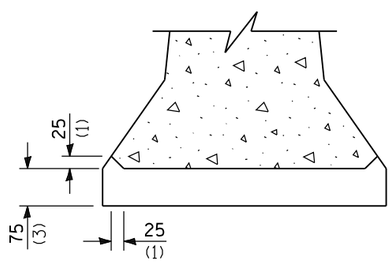

SECTION A-A
LIFTING SLOT

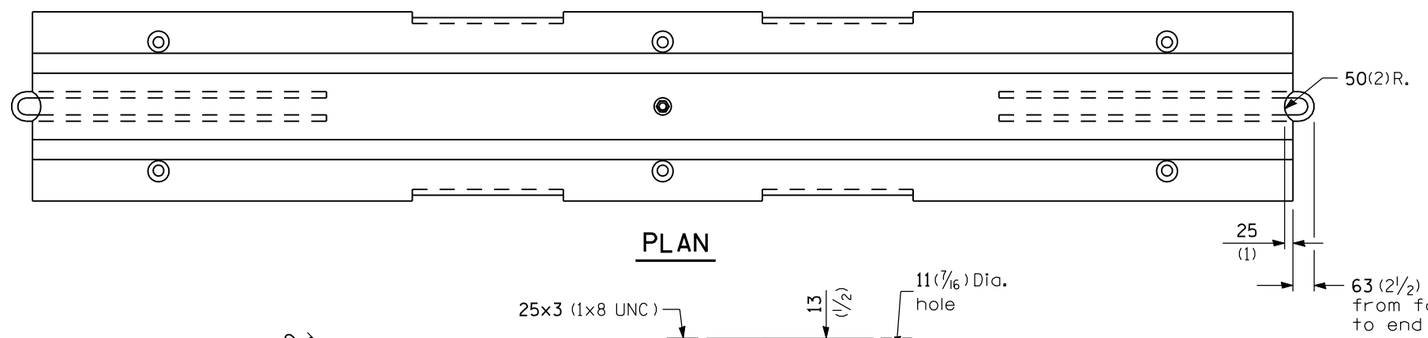

PLAN

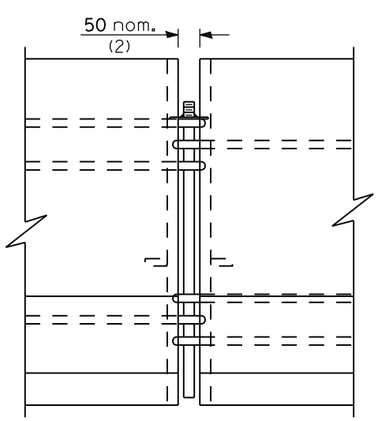

CONNECTING DETAIL

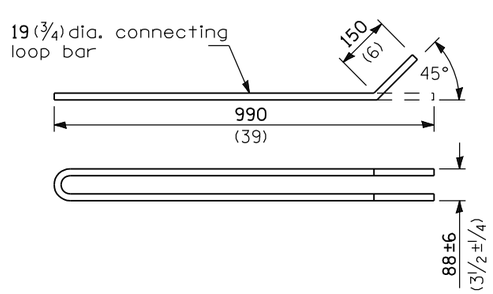

CONNECTING LOOP BAR

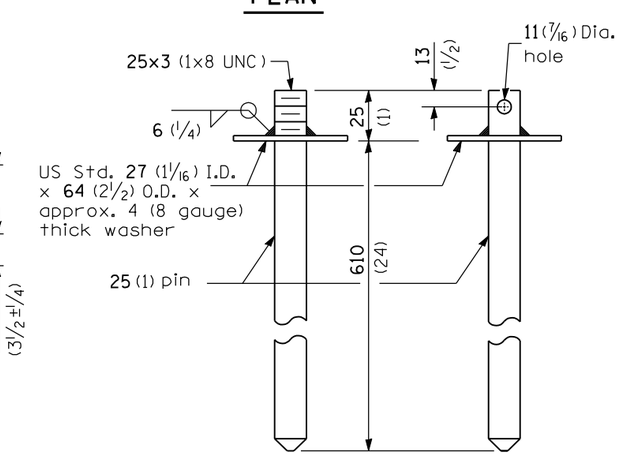

ALTERNATE CONNECTING AND ANCHOR PINS
(End may be beveled 6 (¼) max.)

GENERAL NOTES

Each F shape barrier shall be clearly marked with "ILLINOIS F SHAPE", the Producer's mark and the date of manufacture. The markings shall be indented on the barrier or painted thereon with waterproof paint/ink.

The insert for the M12 (½) bolt shall be capable of 13 kN (3,000 lb) pull-out strength.

All dimensions are in millimeters (inches) unless otherwise shown.

Illinois Department of Transportation

PASSED January 1. 2007
ENGINEER OF POLICY AND PROCEDURES
APPROVED January 1. 2007
ENGINEER OF DESIGN AND ENVIRONMENT

ISSUED 10-1-02

DATE	REVISIONS
1-1-07	Deleted New Jersey
	shape (Sheet 3).
1-1-04	Revised reinforcement
	and added handling holes.

TEMPORARY CONCRETE BARRIER
(Sheet 1 of 2)

STANDARD 704001-03

F SHAPE DESIGN

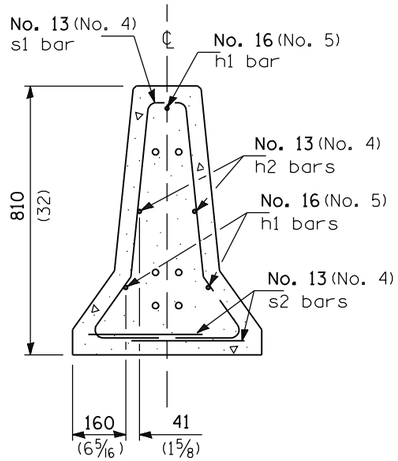

SECTION C-C

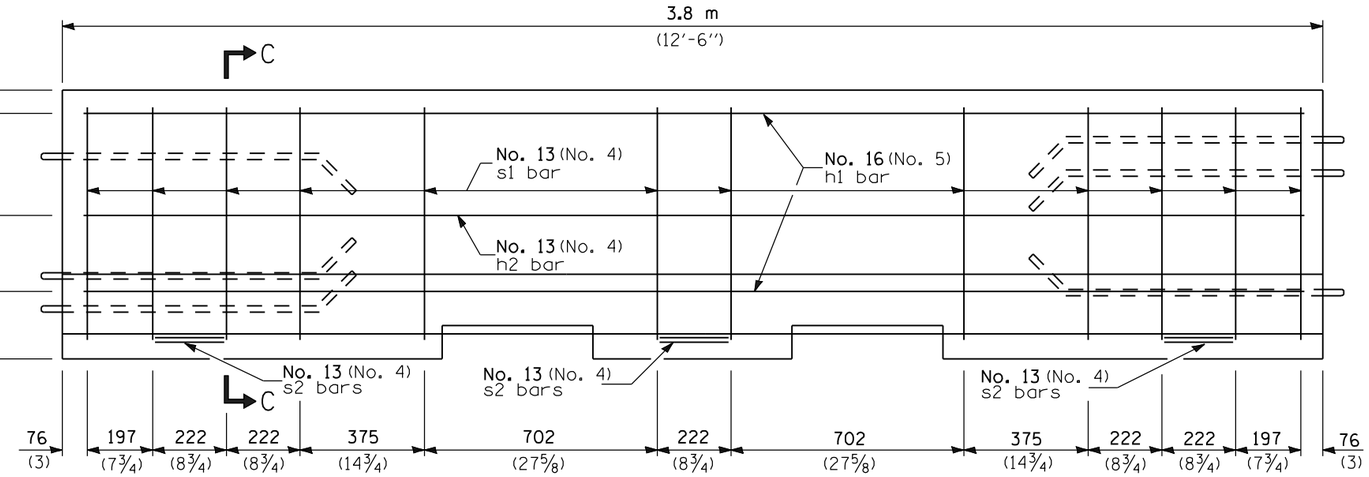

ELEVATION
(Reinforcement)

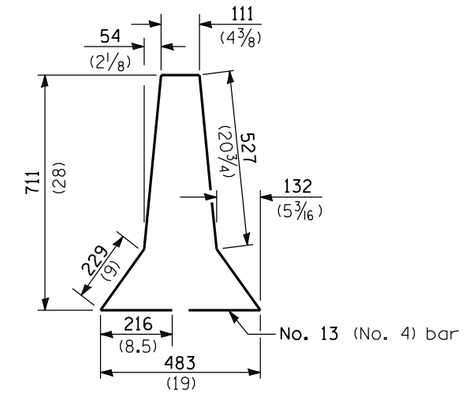

s1 BAR

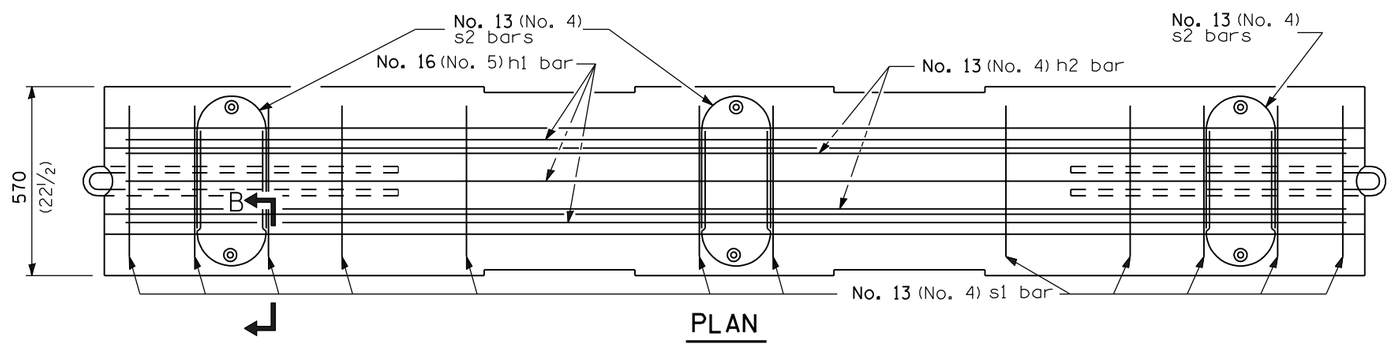

PLAN

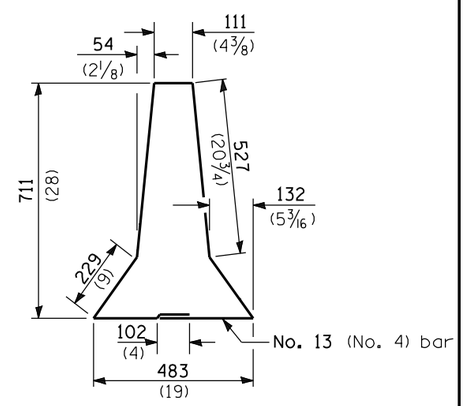

ALTERNATE s1 BAR

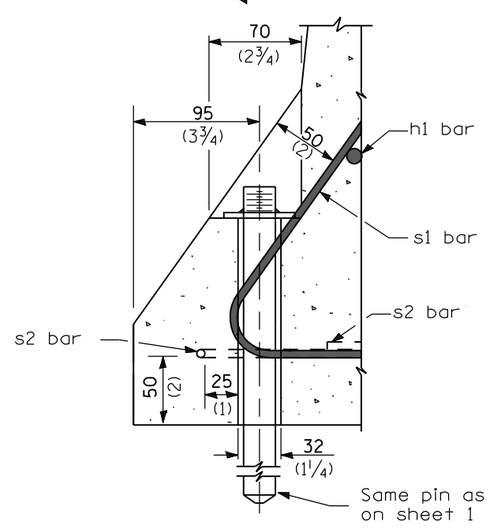

SECTION B-B
ANCHORING DETAIL

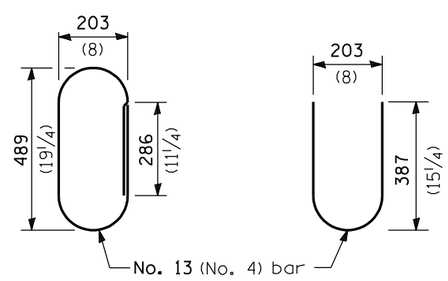

ALTERNATE s2 BARS

Illinois Department of Transportation

PASSED January 1. 2007
ENGINEER OF POLICY AND PROCEDURES
APPROVED January 1. 2007
ENGINEER OF DESIGN AND ENVIRONMENT

ISSUED 10-1-02

TEMPORARY CONCRETE BARRIER
(Sheet 2 of 2)

STANDARD 704001-03