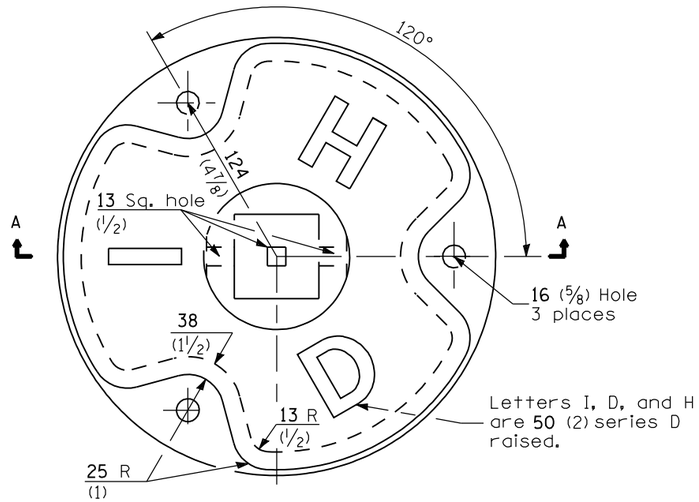

PLAN

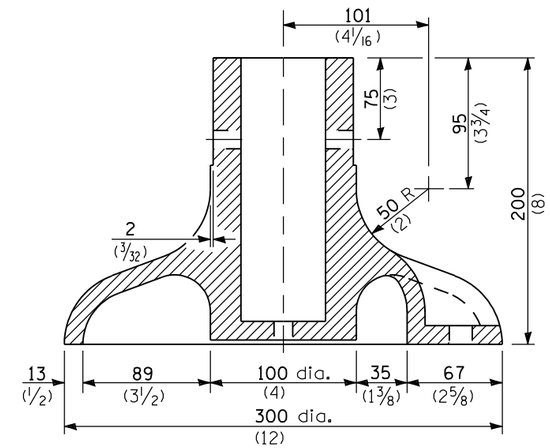

SECTION A-A

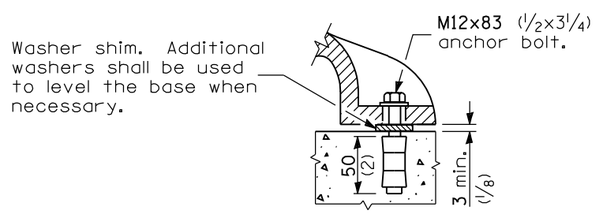

ANCHOR BOLT DETAIL

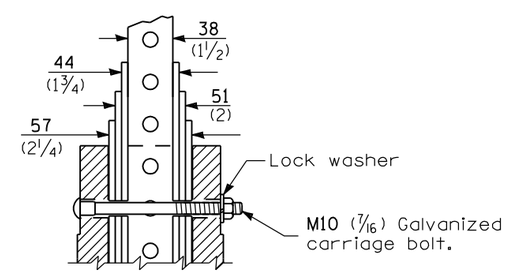

POST ASSEMBLY DETAIL

All dimensions are in millimeters (inches)
unless otherwise shown.

Illinois Department of Transportation

APPROVED January 1, 2007
ENGINEER OF OPERATIONS

APPROVED January 1, 2007
ENGINEER OF DESIGN AND ENVIRONMENT

ISSUED 1-1-07

DATE	REVISIONS
1-1-07	New Standard. Used to be part of Standard 720006.

BASE FOR TELESCOPING STEEL SIGN SUPPORT

STANDARD 731001