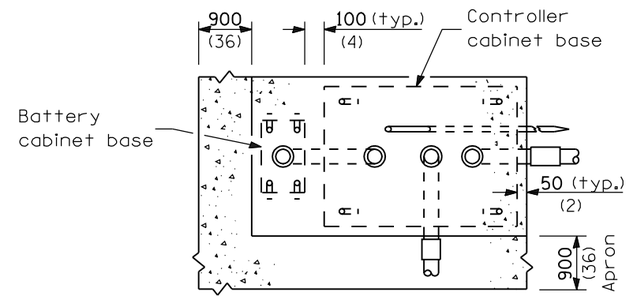

TOP VIEW

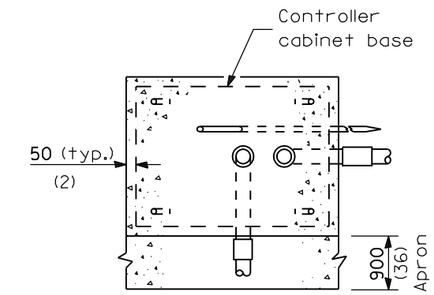

TOP VIEW

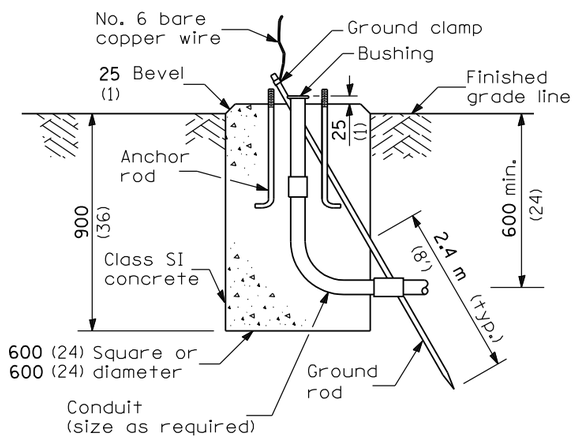

TYPE A

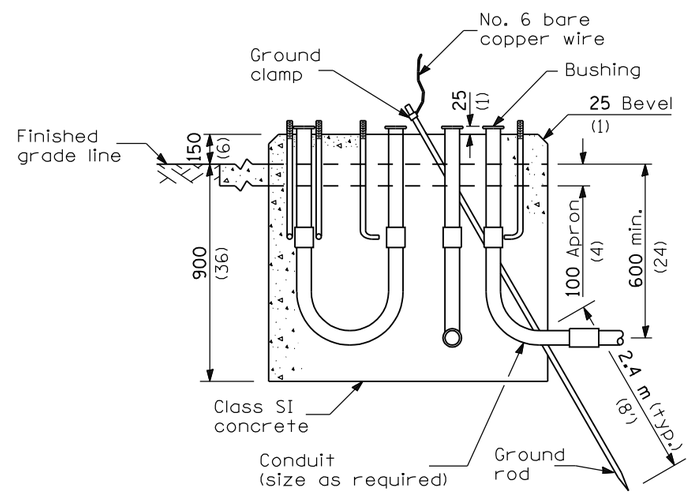

TYPE C
FOR GROUND MOUNTED
CONTROLLER CABINET
AND UPS BATTERY CABINET

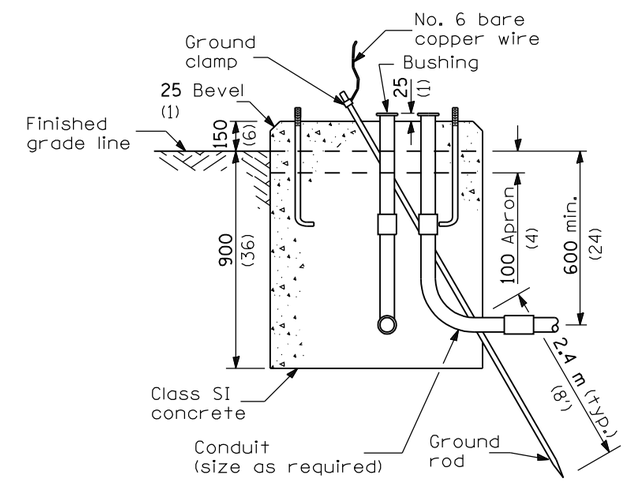

TYPE D
FOR GROUND MOUNTED
CONTROLLER CABINET

All dimensions are in millimeters (inches)
unless otherwise shown.

Illinois Department of Transportation

APPROVED April 1, 2006
ENGINEER OF OPERATIONS

APPROVED April 1, 2006
ENGINEER OF DESIGN AND ENVIRONMENT

ISSUED 1-1-02

DATE	REVISIONS
4-1-06	Added Type C
	foundation detail.
1-1-05	Revised Type E
	foundation detail.

CONCRETE FOUNDATION DETAILS

(Sheet 1 of 2)

STANDARD 878001-04

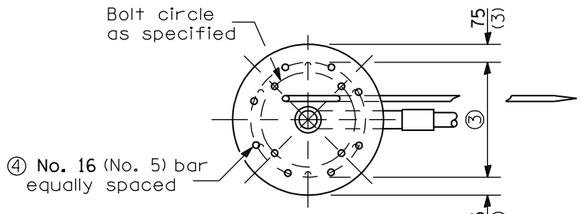

TOP VIEW

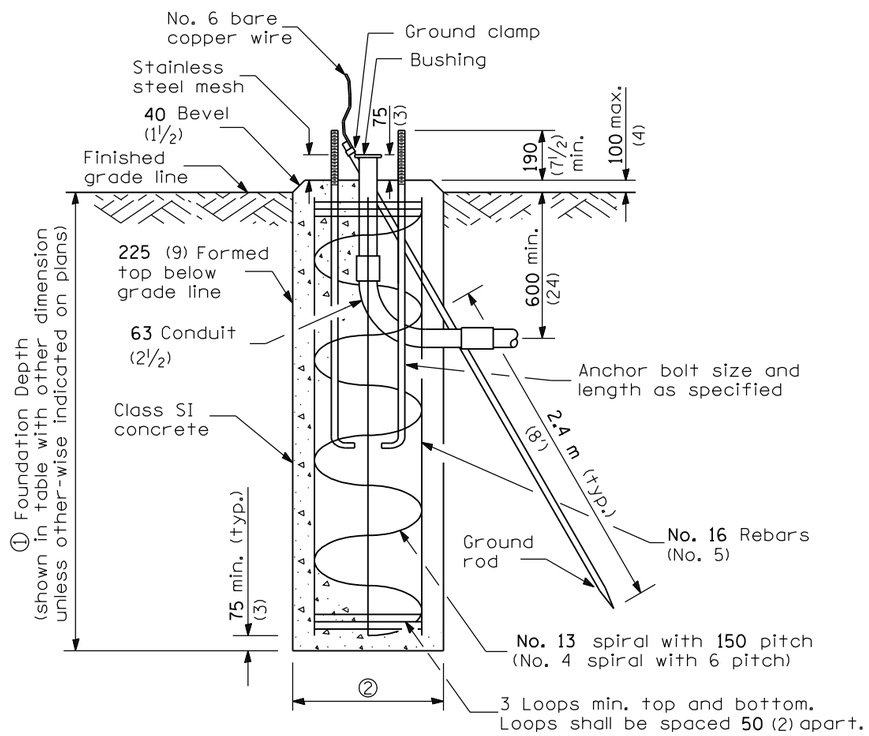

Mast Arm Length	① Foundation Depth*	② Foundation Diameter	③ Spiral Diameter	④ Quantity of No. 16 (No. 5) Bars
Less than 9.1 m (30')	3.0 m (10'-0")	750 (30)	600 (24)	8
Greater than or equal to 9.1 m (30') and less than 12.2 m (40')	4.1 m (13'-6")	750 (30)	600 (24)	8
	3.4 m (11'-0")	900 (36)	750 (30)	12
Greater than or equal to 12.2 m (40') and less than 15.2 m (50')	4.0 m (13'-0")	900 (36)	750 (30)	12
Greater than or equal to 15.2 m (50') and up to 16.8 m (55')	4.6 m (15'-0")	900 (36)	750 (30)	12

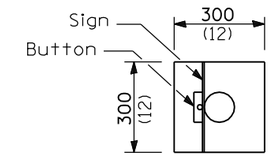

TOP VIEW
TYPICAL ONE BUTTON INSTALLATION

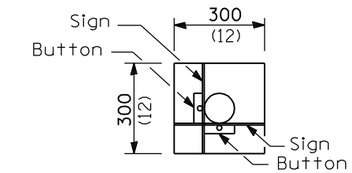

TOP VIEW
TYPICAL TWO BUTTON INSTALLATION

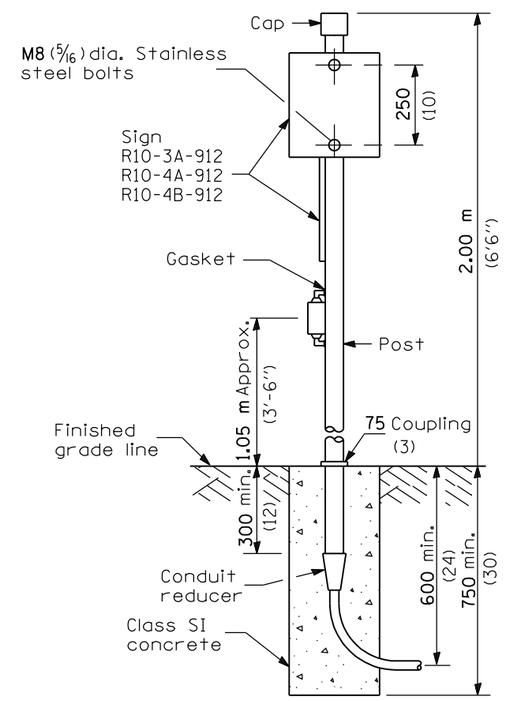

PEDESTRIAN PUSH BUTTON
POST INSTALLATION

All dimensions are in millimeters (inches)
unless otherwise shown.

Illinois Department of Transportation

APPROVED April 1, 2006
ENGINEER OF OPERATIONS

APPROVED April 1, 2006
ENGINEER OF DESIGN AND ENVIRONMENT

ISSUED 1-1-02

TYPE E

For standard and combination mast arm assemblies. Mast arm assembles with dual arms require a special foundation design.

* These foundation depths are for sites which have cohesive soils (clayey silt, sandy clay, etc.) along the length of the shaft, with an average Unconfined Compressive Strength (Qu) > 100 kPa (1.0 tsf). This strength shall be verified by boring data prior to construction or with testing by the Engineer during foundation drilling. The Bureau of Bridges & Structures should be contacted for a revised design if other conditions are encountered.

CONCRETE FOUNDATION DETAILS

(Sheet 2 of 2)

STANDARD 878001-04