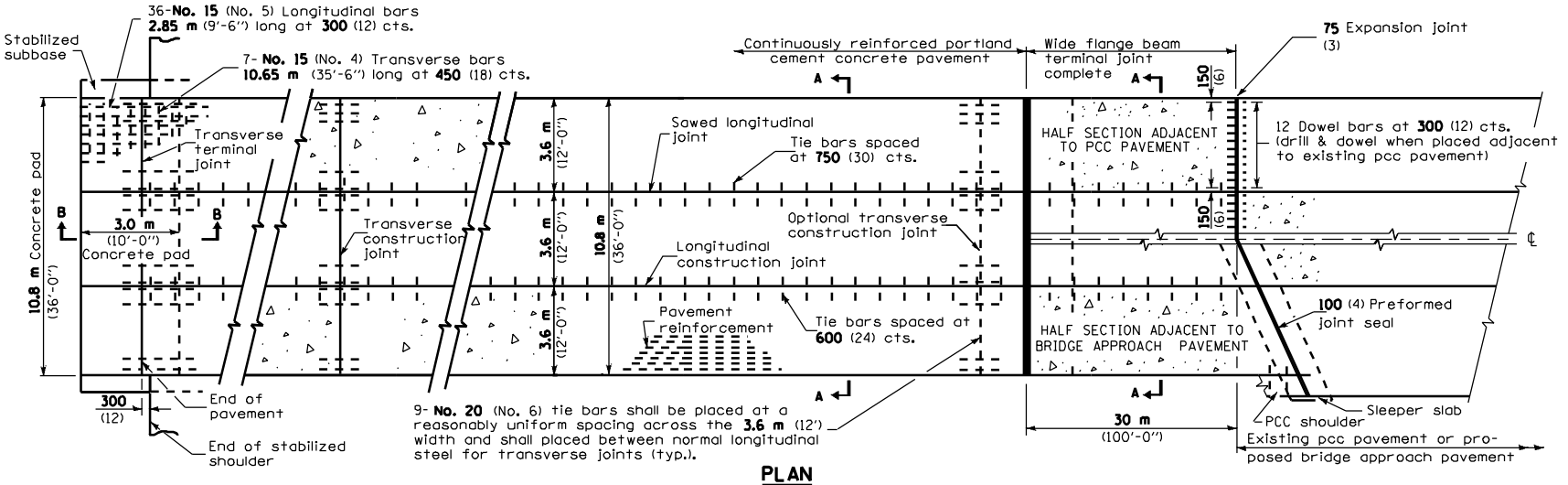

PLAN

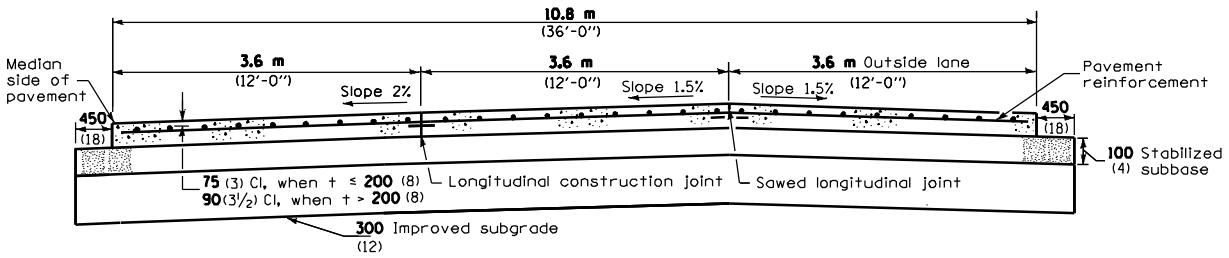

SECTION A-A

(TYPICAL 3-LANE, 1-WAY WITH SHOULDERS)

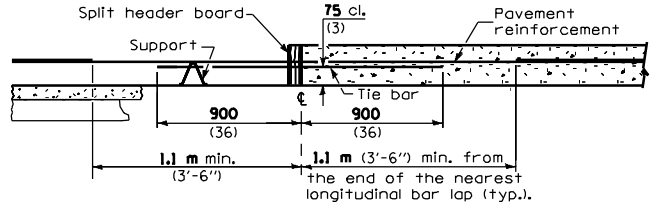

TRANSVERSE CONSTRUCTION JOINT

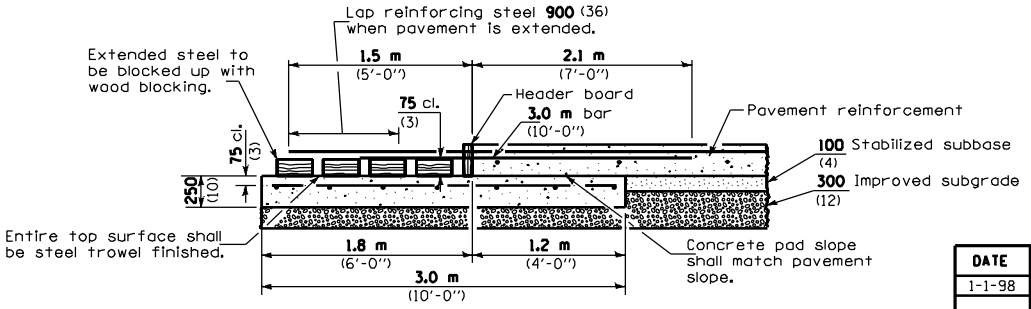

TRANSVERSE TERMINAL JOINT

SECTION B-B

GENERAL NOTES

Sealant components for the wide flange beam terminal joint shall be as follows or approved equals. Sealant shall be Dow Corning 888 Silicone Highway Joint Sealant. Tape shall be Polyethylene Tape No. 40. Primer, used on the metal only, shall be Dow Corning 1200. At the Contractor's option the joint may be sealed as shown in the optional groove detail.

See Standard 421001 for details of pavement reinforcement.

See Standards 420001 and 420401 for details of joints and tie bars not shown.

All dimensions shall be in millimeters (inches) unless otherwise shown.

Illinois Department of Transportation

PASSED January 1, 1998
ENGINEER OF POLICY AND PROCEDURES
APPROVED January 1, 1998
ENGINEER OF DESIGN AND ENVIRONMENT

ISSUED 1-1-97

DATE	REVISIONS
1-1-98	Enlarged x-sections.
	Added tie bar clearance
	to transverse joint.
1-1-97	Renum. Standard
	Deleted DN Symbol. Added
	title to SECTION A-A.

10.8 m (36') CRC PAVEMENT

(WITH WIDE FLANGE BEAM TERMINAL JOINT)

(Sheet 1 of 2)

STANDARD 421106-01

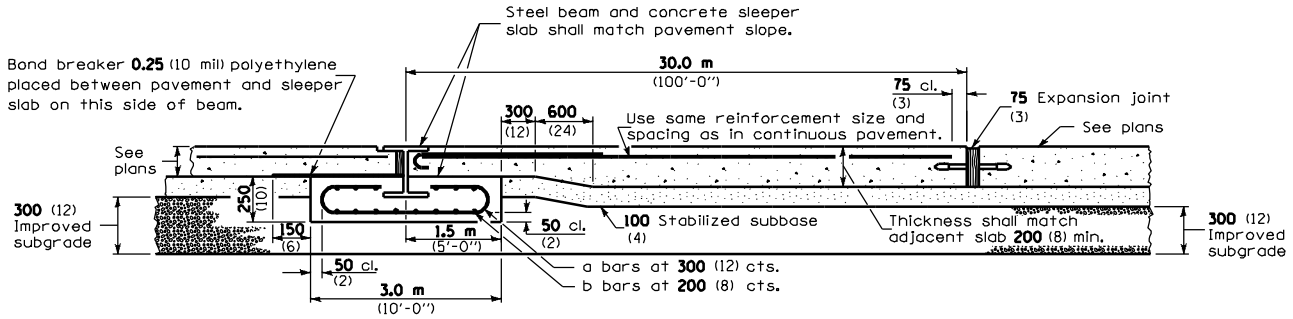

WIDE FLANGE BEAM TERMINAL JOINT

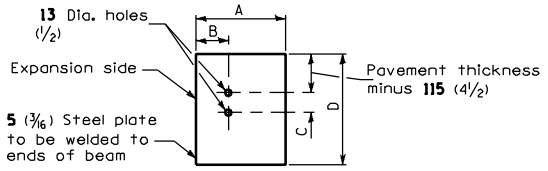

END PLATE

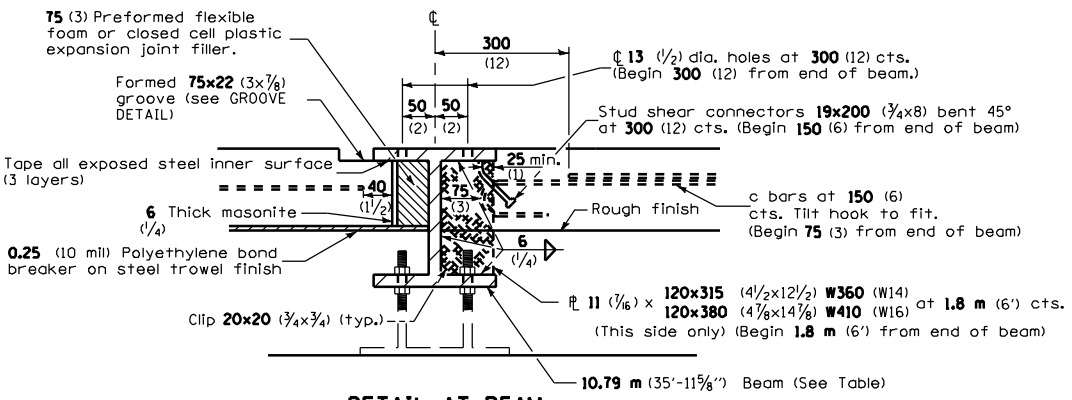

DETAIL AT BEAM

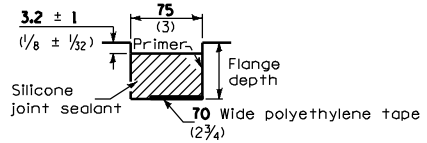

GROOVE DETAIL

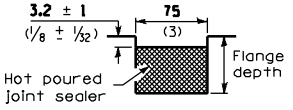

GROOVE DETAIL (OPTIONAL)

PAVEMENT THICKNESS	< 250 (10)	≥ 250 (10)
BEAM SIZE	W360x122 (W14x82)	W410x149 (W16x100)
A	255 (10 1/8)	265 (10 3/8)
B	110 (4 5/16)	115 (4 7/16)
C	75 (3)	100 (4)
D	360 (14 1/4)	430 (17)

MATERIALS REQUIRED FOR ONE TRANSVERSE TERMINAL JOINT COMPLETE

Concrete, m^3 (cu. yds.)	8.1	(11.1)
Reinforcement bars, kg (lbs.)	278	(523)
Pavement reinforcement, m^2 (sq. yds.)	16.2	(20)

MATERIALS REQUIRED FOR ONE WIDE FLANGE BEAM TERMINAL JOINT COMPLETE

Bar	No.	Size	Length	Shape
a	36	No. 15 (No. 4)	5.8 m (19'-0")	
b	29	No. 15 (No. 5)	10.7 m (35'-8")	
c	72	No. 20 (No. 6)	2.6 m (8'-6")	

Concrete, m^3 (cu. yds.)	8.1	(11.1)
Reinforcement Bars, kg (lbs.)	1256	(2455)
Structural Steel, kg (lbs.) W360 (W14)	1360	(3040)
W410 (W16)	1655	(3710)

•Weight includes beam, end plates, stiffener plates and studs.

Pavement, m^2 (sq. yds.)	324	(400)
Pavement Reinforcement, m^2 (sq. yds.)	324	(400)
100 (4) Stabilized Subbase, m^2 (sq. yds.)	333.5	(411.6)
Improved Subgrade, m^2 (sq. yds.)	351	(433.3)

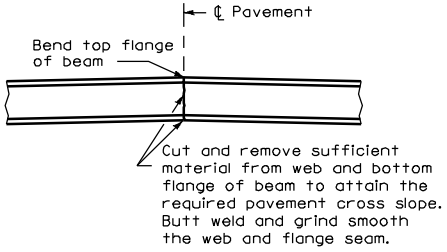

DETAIL OF CUTTING AND WELDING BEAM

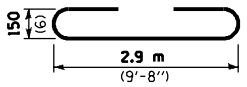

BAR a

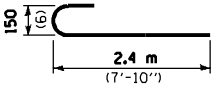

BAR c

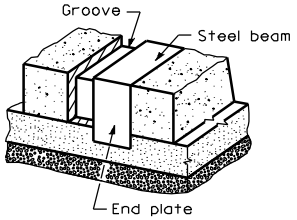

VIEW OF GROOVE AT EDGE OF PAVEMENT

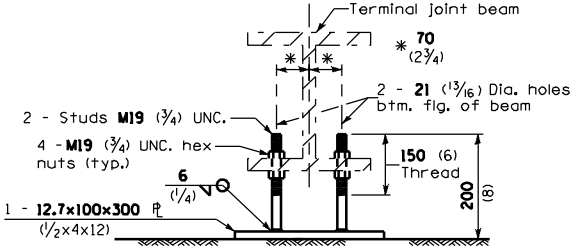

OPTIONAL ADJUSTABLE CHAIR

All dimensions are in millimeters (inches) unless otherwise shown.

Illinois Department of Transportation

PASSED January 1, 1998
ENGINEER OF POLICY AND PROCEDURES
APPROVED January 1, 1998
ENGINEER OF DESIGN AND ENVIRONMENT

ISSUED 1-1-97

10.8 m (36') CRC PAVEMENT

(WITH WIDE FLANGE BEAM TERMINAL JOINT)
(Sheet 2 of 2)

STANDARD 421106-01